(19) Europäisches Patentamt
European Patent Office
Office européen des brevets

(11) Publication number : **0 389 097 B1**

(12) # EUROPEAN PATENT SPECIFICATION

(45) Date of publication of patent specification : **04.10.95 Bulletin 95/40**

(51) Int. Cl.[6] : **H04L 12/28,** H04B 10/12

(21) Application number : **90301571.7**

(22) Date of filing : **14.02.90**

(54) **Photonic local/metropolitan area network.**

(30) Priority : **23.02.89 US 314724**

(43) Date of publication of application : **26.09.90 Bulletin 90/39**

(45) Publication of the grant of the patent : **04.10.95 Bulletin 95/40**

(84) Designated Contracting States : **DE ES FR GB IT NL**

(56) References cited :
EP-A- 0 226 417
EP-A- 0 269 376
US-A- 4 710 914
DEPARTMENT OF COMPUTER SCIENCE, STANFORD UNIVERSITY, TECHNICAL REPORT, NO. STAN-CS-87-1185, OCTOBER 1987, STANFORD, USA. Z. HAAS et al.: "Blazenet: A Photonic Implementable Wide-Area Network"

(73) Proprietor : **AT & T Corp.**
32 Avenue of the Americas
New York, NY 10013-2412 (US)

(72) Inventor : **Haas, Zygmunt**
149 Eastwick Court
Matawan, New Jersey 07747 (US)

(74) Representative : **Watts, Christopher Malcolm Kelway, Dr. et al**
AT&T (UK) LTD.
AT&T Intellectual Property Division
5 Mornington Road
Woodford Green Essex IG8 OTU (GB)

EP 0 389 097 B1

Note : Within nine months from the publication of the mention of the grant of the European patent, any person may give notice to the European Patent Office of opposition to the European patent granted. Notice of opposition shall be filed in a written reasoned statement. It shall not be deemed to have been filed until the opposition fee has been paid (Art. 99(1) European patent convention).

Description

Field of the Invention

This invention relates generally to packet-switched optical communication systems for use in local and/or metropolitan area networks (LAN's or MAN's) and, more particularly, to such networks which are adapted to resolve collisions between advancing packets without buffering the colliding packets within the switching nodes.

Background of the Invention

Packet-switching technology has been advantageously applied to optical communication systems. In packet-switched networks operating at low transmission speeds, the collisions between advancing packets are resolved by buffering the colliding packets until the output link becomes available. Such a scheme is commonly referred to as store-and-forward routing. Since large optical memories are expensive, today's solution for networks that use optical communication is to convert the optical signal to an electrical signal for appropriate buffering and queuing.

While the buffering and queuing techniques have met with some success for optical communication systems, such techniques become commercially impractical when data transmission speeds increase into the Gbps range. This is because of the optical-to-electrical conversion required. Some alternatives to the store-and-forward scheme have been proposed. One such alternative, commonly referred to as "hot-potato" routing, assumes no buffers in the switching nodes. Whenever two or more packets are about to collide, one packet is forwarded to the desired output and other packet or packets are forwarded to another output, which may not be the best route to the packet destination node.

In general, the switching node of "hot-potato" topologies must have the same number of input and output links. Some examples of networks that use the "hot-potato" scheme are the Manhattan Street Network (MSN) and Blazenet. Unfortunately, a Manhattan Street Network requires a very inflexible grid type of topology, and Blazenet is designed for wide-area network span.

The proposed invention also uses the "hot-potato" routing. However, as opposed to MSN, for example, the proposed invention can be built on totally uncontained topologies. Moreover, because each path contains a reverse channel, the number of input and output paths to a switching node need not, necessarily, be equal.

A "hot-potato" switching scheme by the "loop-back" technique, as used in this invention is described in "Blazenet": A Photonic Implementable Wide-Area Network," Department of Computer Science, Stanford University, Technical report No. STAN-CS-87-1185, October 1987. The proposed invention deals with the local/metropolitan area networks, as opposed to wide-area networks in "Blazenet", the difference being the number of packets that are stored in the loop-back and, consequently, the switching algorithm need by the switching nodes.

Summary of the Invention

This invention refers to a packet-switched local or metropolitan area optical communications network in which collisions between two or more packets are resolved without local buffering in the switching node.

In this invention, a (logical) uni-directional link within a network is replaced by two optical links. One optical link, which is referred to as the forward link, is capable of transmitting an optical signal in the direction of the original optical uni-directional link. The other link, which can be referred to as the reverse link, is capable of transmitting an optical signal in the opposite direction. These links can be selectively configured to form either a direct path between the nodes (in which case only the forward link is used), or a "loop-back" path between the nodes (in which case both the forward and reverse are used to form a closed optical loop between the two nodes). When in the "loop-back" configuration, the path is designed to store a single packet.

Prior to advancing a packet through a node to the next occurring node in the inventive system, a determination is made as to whether or not the optical loop which connects this node to that next node is occupied with a packet. If the optical loop is not occupied, the packet is advanced along the forward optical link to the next node. If the optical fiber loop is occupied, then the reverse optical link connected to the previous node is rapidly reconfigured to form a "loop-back" path, and the packet is sent back to the previous node via this "loop-back" path. The packet may be "recirculated" in this "loop-back" path until the optical loop to the next node becomes available.

Brief Description of the Drawing

In the drawing,

FIG. 1 is a schematic representation of a prior art local area network having a star topology;

FIG. 2 is a schematic representation of a prior art local area network commonly referred to as a Manhattan Street Network;

FIG. 3 is a schematic representation of four nodes coupled together via optical fiber paths in accordance with the principles of the invention;

FIG. 4 is a schematic representation of a source routed packet format which can be used to route a packet through a network in accordance with the principles of the invention;

FIG. 5 is a schematic representation of an optical network in accordance with the principles of the invention;

FIG. 6 is a schematic of an additional input for coupling traffic from a local source to the network of FIG. 5; and

FIG. 7 is a schematic representation of a Star-of-Star network in accordance with the principles of the invention.

Detailed Description

The invention introduces a novel network architecture that is based on switching nodes which do not have local memory. The inventive network involves the use of optical fiber media to store packets in transit when a collision between two or more packets at a switching node is imminent. According to the invention, each uni-directional link in a conventional network is replaced by a fiber path composed of two links that carry packets in opposite directions. These two opposite-directed links can serve as a forward path or as a "loop-back" path. In the later case, the two opposite-directed links are configured to form a loop on which a blocked packet will circulate until the required output loop at the arriving switching node becomes available. This invention avoids the need of large buffers within a switching node that needs to operate at high speeds. This becomes a serious problem as the transmission of the optical media increases.

The invention is directed toward high performance communication systems, for example, distributed processing systems. Such high performance communication systems require the "low delay", "multi-point", "on-demand" delivery of large amounts of data.

The "low-delay" characteristic of high performance communication systems refers to the rapidity with which data can be transmitted from one user of the system to another. For example, certain operations - called atomic operations - must be performed without interruption if the integrity of the procedure is to be maintained. Exemplary of such operations is the withdrawal of funds from an account and the immediate debiting of said account to reflect such withdrawal. Clearly, any interruption between such withdrawal and such debiting can endanger the integrity of the associated data bases. Low delay networks minimize the occurrence of such deleterious delays. The term "local area network" refers to a general-purpose network that can serve a wide variety of devices. Local area networks support minicomputers, mainframes, terminals, and other peripheral devices. In many cases, local area networks can carry not only data, but voice, video and graphics.

One of the possible types of a local area network topology which uses optical fiber is the star type of topology.

Referring to FIG. 1, there is illustrated a Star network. A central switching element 10 is coupled to all of the nodes 12, 14, 16, 18, 20 of the network via, for example, optical fibers. A station wishing to transmit data sends its transmission to the central switching node 10 which forwards the transmission to the specified nodes by addressing data provided to node 10 by the source node.

Clearly, as the number of users for the network increases, the throughput per user decreases, at least linearly. To help avoid this problem, mesh networks were developed. One such network is the Manhattan Street Network illustrated in FIG. 2. The Manhattan Street Network is based on a grid of alternatingly-directed paths of rows and columns normally referred to as streets and avenues. Various nodes 60, 62, 64, 66, 68, 70, 72, 74, 76, 78, 80, 82, 84, 86, 88, 90 exist on the corners of the streets and avenues. Thus, routing from a particular street and avenue to a destination is straightforward. As in a city with this layout, any destination street and avenue destination can be found without asking directions, even when some roads are blocked. In one of its configurations the Manhattan Street Network does not store-and-forward the data at intermediate nodes, and does require that the packets be immediately forwarded.

An example of a Star type of network topology, in accordance with the principles of this invention, having four nodes is illustrated in FIG. 3. Switching node 100 is coupled to switching nodes 102, 104, 106 via optical fiber paths 108, 110, 112. Appropriate hosts 101, 103, 105, 107, 109, 111, 113, 115, 117 are associated with each node. Optical fiber paths 108, 110 and 112 can be used to transmit a packet from node 100 directly to nodes 102, 104 and 106 respectively. In the event a destination is occupied, the optical fiber paths can store a single optical packet being transmitted by causing it to circulate around the optical path 108, 110, and/or 112. The number of times a packet circulates can be limited by a loop-count field in the header portion of the packet.

To enable the network of FIG. 3 to carry traffic in two directions, a second optical fiber path is required from node 100 to each of the other nodes 102, 104 and 106. In FIG. 3, double-sided arrows are assigned to the optical fiber paths to indicate that there are two separate paths for serving traffic in opposite directions. Each optical fiber path, or loop 108, 110, 112 is a bi-directional channel which serves unidirectional network traffic. Thus, for bi-directional network traffic, two loops are required. In a different configuration, a single loop can serve traffic in both directions.

To advance packets, fast switching and simple switching logic at each switching node can be implemented with source routing. Referring to FIG. 4, there is illustrated a format of a packet which can be used to specify the source route as a series of hop-selects. Each hop-select field indicates the output link on

which the packet is to be forwarded for that hop. When a packet arrives at a switching node, the first non-zero hop-select field in the packet is examined to determine the next output link for the packet. If that output path is available for transmission of a new packet, the hop-select field is zeroed and the packet is immediately routed to the available output link.

When a packet is blocked because the output path that was selected is unavailable at the packet's arrival time, the packet is routed back to the previous switching node on the return portion of the path that the packet arrived on. Upon its arrival at the previous switching node, the return packet is again sent to arrive at the blocking switching node one round-trip time after it first arrives at the node. Thus, the optical fiber path effectively provides short-term storage of the optical packet and causes the packet to reappear at the blocking switching node a short time later. The loopcount field of a packet header is decremented and examined each time a packet is returned. If the loopcount reaches zero, the packet is removed from the network to prevent a packet from indefinitely looping within the network because of a failure or load condition.

This invention does not require memory in the switching node of the size and speed which is required to store all blocked packets, such as would be required for a conventional store-and-forward design. Additionally, the loop-back technique here disclosed exerts back pressure on the link over which the packet was received because each return packet reduces the availability of the path for receiving and forwarding new packets. In an extreme case, the back pressure can extend back from the point of contention to one or more of the packet sources. Besides alerting the packet sources of congestion, the back pressure provides fast feedback to the source routing mechanism to enable it to react more quickly to network load and topological changes.

The simple logic required for hop selection increases its photonic implementation feasibility and makes the switching at gigabit data rate possible.

Each optical fiber path 108, 110, 112 comprises two optical links which, when joined end to end forms a loop and together has a total length which is equal to or larger than the length of the packet being transmitted, or to the maximum packet size if variable length packets are used. Switches that are used to reconfigure the optical paths are commercial products of, for example, BT&D Technologies, having offices in the United States and in England, and Crystal Technology, Inc., having offices in Palo Alto, California.

If the distance between nodes exceeds the length which corresponds to the packet size (so that a loop formed directly between them would exceed twice the packet size) it can be divided into two or more loops by a simple switching node with two input and two output loops. If the internodal distance is less than half the required size of the loop, the excessive length of the loop can be compactly stored.

Referring to FIG. 5, there is illustrated a schematic of structure in accordance with the principles of the invention. For simplicity, only two switching nodes each having one input path 116 and one output path 118 are shown. As noted previously, each optical path is comprised of two optical links which can be selectively configured to form a straight-through transmission path for an optical packet or a loop-back path for the optical packet to controllably selectively delay its advance.

Each input path includes a packet detector circuit 120 and a switching delay 122. The packet detector circuit scans the input path for syncs. Upon detection of a sync, the packet detector generates a new-packet signal and reports a packet arrival to a Control circuit 121. Switching delay 122, which is coupled to report header information to Control circuits 121, can comprise a length of fiber which is long enough to contain the packet header and the number of bits which correspond to the time the control logic requires to do the actual switching.

Each output path 118 includes a packet detector circuit 124 that scans the output path for a returned packet and is coupled to report this information to Control circuits 121. Upon detection of a returned packet, a returned-packet signal is generated. A loop is considered to be free if it does not contain a packet or any part of a packet. The Control circuit can uniquely determine the status of a loop using the returned-packet signal and a timer that can be set for a packet length. Other implementations are also possible.

The switching nodes that switch a packet from an input loop 116 to an output loop 118 can be implemented in a switching matrix configuration. However, in those instances where there are a large number of inputs/outputs, an alternate switch architecture, such as a variation of Banyan network, can be used.

When a packet is to be forwarded from an input loop to an output loop, the availability of the output loop is checked. An output loop is available if no active connection of any other loop to this loop currently exists and the loop is not occupied by a returned packet. The condition that a loop is not occupied by a returned packet can be determined by the timer that is triggered by the sync of every transmitted and/or returned packet. If the output loop is available, the packet is clocked from its input loop onto the output loop by closing switches 126, 128 as illustrated. If, on the other hand, the output loop is busy, the packet is blocked, and it is returned by being clocked out on the same input loop it came in on. This is accomplished by positioning switch 126 as shown by the dotted arrow. If more than one packet attempts to enter a specific output loop, only one packet will succeed. The successful packet will be the one with the higher priority (if the priority field is implemented in the packet

structure) or the one that is chosen randomly in the case of equal priorities. Each other packet or packets are clocked out on their loops. The input loop terminates at another node and at this other node the loop is referred to as the output loop. At the other node a blocked packet, sets the timer to indicate that the loop is busy and is clocked out to arrive at the blocking node one round trip later.

The switching node of FIG. 5 can be implemented as an interconnection of a number of photonic components.

Referring to FIG. 6, local I/O packets can be handled in a manner similar to the way that the forwarded packets are handled. The local delay line 130 of a local fiber optical loop having two optical links can have a length that is equal to that of the packet size. on the same principle as an insert register in LAN's. When the current packet is inserted into the network, and empties the local loop, a new packet from the local host can be input to the local loop and circulate in the local loop until it is inserted into the network. The schematic of FIG. 6 is similar to that of FIG. 5 with the addition of a local loop and the necessary switches.

In accordance with the principles of this invention, a collision between two packets can be resolved in optical network topologies by replacing each of the various logical links with an optical loop having two substantially parallel optical links with total length that can accommodate the length of a single packet, and which can be selectively configured to form either a direct straight throughput or loop-back path.

FIG. 7 illustrates a Star-of-Star type of network topology having central switching elements 150, 152, 154, 156, 158 interconnected via optical fiber paths, and nodes 160, 162, 164, 166 of each cluster coupled to an associated central switching element via an optical fiber path having two optical links which can be selectively configured to form either a direct straight through path or a loop-back path.

Thus, collisions of optical packets in network topologies are resolved by using selectively configurable optical fiber paths to couple together the various nodes. An optical fiber path, when configured to form a loop-back, resolves collisions by delaying the advance of an optical packet. By recirculating a packet through the loop-back path, the loop-back path effectively functions as a storage medium for the packet. With appropriate switching control, a colliding packet can be recirculated around a loop until a preceding packet has been cleared.

Claims

1. A local area network for providing communications paths for packets among a plurality of nodes (102, 104, 106), the network comprising a first switching node, a second switching node, a first optical fiber path and a second optical fiber path (e.g. 108), CHARACTERIZED IN THAT said first and second optical fiber paths have a combined length which is not less than that of a single packet and not greater than that of two packets, and wherein said network also comprises switch means (126) to controllably selectively couple said first optical fiber path to transmit a packet from said first switching node to said second switching node when said second node is free to accept said packet and to controllably selectively couple said first optical fiber path to said second optical fiber path to return the packet on said first optical fiber path via said second optical fiber paths back toward said first switching node when said second node is not free to accept said packet.

2. The local area network of claim 1 further comprising means coupled to said first switching node to resend a packet back to said second switching node over said first optical fiber path.

3. The local area network of claim 2 further comprising first packet detector means (120) coupled to said first optical fiber path at said second switching node to detect the occurrence of a packet, and second packet detector means coupled to said second optical fiber path at said first switching node to detect the occurrence of a packet.

4. The local area network of claim 3 wherein said first switching node comprises a first switching means coupled to said second optical fiber path and a second switching means coupled to said first optical fiber path.

5. The local area network of claim 4 further comprising switching delay means (122) coupled to the output of said first packet detector having a delay which is substantially equal to the time required to operate said switching means.

6. The local area network of claim 5 further comprising control circuit means (121) coupled to said first and second packet detectors and said first and second switching means to selectively pass an arriving packet at the second node or to loop-back the arriving packet to said first node over said second optical fiber path.

7. The local area network of claim 6 wherein said switching delay means has a delay equal substantially to the time required for said control circuit means to determine the appropriate action required for an arriving packet plus the time required by said control circuit to operate said

switching means plus the time which results from the division of the number of bits in a packet header by the signaling rate of the bits of the packet header.

Patentansprüche

1. Ortsnetz zur Bereitstellung von Kommunikationswegen für Pakete zwischen einer Mehrzahl von Knoten (102, 104, 106), wobei das Netz einen ersten Vermittlungsknoten, einen zweiten Vermittlungsknoten, einen ersten Lichtleitweg und auch einen zweiten Lichtleitweg (z.B. 108) umfaßt, dadurch gekennzeichnet, daß besagte erste und zweite Lichtleitwege eine kombinierte Länge aufweisen, die nicht geringer als die eines einzelnen Paketes und nicht größer als die von zwei Paketen ist, und wobei das besagte Netz auch Koppelmittel (126) zum steuerbar gezielten Ankoppeln des besagten ersten Lichtleitweges zur Übertragung eines Pakets vom besagten ersten Vermittlungsknoten zum besagten zweiten Vermittlungsknoten, wenn der besagte zweite Knoten zur Annahme des besagten Pakets frei ist, und zum steuerbar gezielten Ankoppeln des besagten ersten Lichtleitweges an den besagten zweiten Lichtleitweg zur Rückübertragung des Pakets auf den besagten ersten Lichtleitweg über besagte zweite Lichtleitwege zurück zum besagten ersten Vermittlungsknoten, wenn der besagte zweite Knoten nicht zur Annahme des besagten Pakets frei ist, umfaßt.

2. Ortsnetz nach Anspruch 1, weiterhin mit am den besagten ersten Vermittlungsknoten angekoppelten Mitteln zum nochmaligen Zurücksenden eines Pakets zum besagten zweiten Vermittlungsknoten über den besagten ersten Lichtleitweg.

3. Ortsnetz nach Anspruch 2, weiterhin mit am besagten zweiten Vermittlungsknoten an den besagten ersten Lichtleitweg angekoppelten ersten Paketdetektormitteln (120) zum Erkennen des Auftretens eines Pakets und am besagten ersten vermittlungsknoten an den besagten zweiten Lichtleitweg angekoppelten zweiten Paketdetektormitteln zum Erkennen des Auftretens eines Pakets.

4. Ortsnetz nach Anspruch 3, wobei der besagte erste Verbindungsknoten ein an den besagten zweiten Lichtleitweg angekoppeltes erstes Koppelmittel und ein an den besagten ersten Lichtleitweg angekoppeltes zweites Koppelmittel umfaßt.

5. Ortsnetz nach Anspruch 4, weiterhin mit an den Ausgang des besagten ersten Paketdetektors angekoppelten Schaltverzögerungsmitteln (122) mit einer Verzögerung, die im wesentlichen der zum Betreiben der besagten Koppelmittel erforderlichen Zeit gleich ist.

6. Ortsnetz nach Anspruch 5, weiterhin mit an besagte erste und zweite Paketdetektoren und an besagte erste und zweite Koppelmittel angekoppelten Steuerschaltungsmitteln (121) zum gezielten Weitergeben eines ankommenden Pakets am zweiten Knoten oder zum Rückschleifen des ankommenden Pakets zum besagten ersten Knoten über den besagten zweiten Lichtleitweg.

7. Ortsnetz nach Anspruch 6, wobei das besagte Schaltverzögerungsmittel eine Verzögerung aufweist, die im wesentlichen der Zeit gleich ist, die erforderlich ist, daß das besagte Steuerschaltungsmittel die für ein ankommendes Paket erforderliche entsprechende Handlung bestimmen kann, zuzüglich der von der besagten Steuerungsschaltung erforderlichen Zeit zur Betätigung des besagten Koppelmittels zuzüglich der Zeit, die sich aus dem Teilen der Bitzahl in einem Paketkopf durch die Signalisierungsrate der Bit des Paketkopfes ergibt.

Revendications

1. Réseau local pour fournir des voies de communications pour des paquets entre une pluralité de noeuds (102, 104, 106), le réseau comprenant un premier noeud de commutation, un deuxième noeud de commutation, une première voie de fibre optique et une deuxième voie de fibre optique (ex. 108), **CARACTERISE EN CE QUE** lesdites première et deuxième voies de fibre optique ont une longueur combinée qui n'est ni inférieure à celle d'un paquet unique et ni supérieure à celle de deux paquets, et dans lesquels ledit réseau comprend également un moyen de commutation (126) pour raccorder de manière maîtrisable et sélective ladite première voie de fibre optique pour transmettre un paquet depuis ledit premier noeud de commutation jusqu'audit deuxième noeud de commutation quand ledit deuxième noeud est libre pour accepter ledit paquet et pour raccorder de manière maîtrisable et sélective ladite première voie de fibre optique avec ladite deuxième voie de fibre optique pour retourner le paquet sur ladite première voie de fibre optique via lesdites deuxièmes voies de fibre optique vers ledit premier noeud de commutation quand ledit deuxième noeud n'est pas libre pour accepter ledit paquet.

2. Réseau local de la revendication 1 comprenant de plus un moyen raccordé audit premier noeud de commutation pour renvoyer un paquet audit deuxième noeud de commutation à travers ladite première voie de fibre optique.

3. Réseau local de la revendication 2 comprenant de plus un premier moyen détecteur de paquet (120) raccordé avec ladite première voie de fibre optique audit deuxième noeud de commutation pour détecter l'occurrence d'un paquet, et un deuxième moyen détecteur de paquet raccordé avec ladite deuxième voie de fibre optique audit premier noeud de commutation pour détecter l'occurrence d'un paquet.

4. Réseau local de la revendication 3 dans lequel ledit premier noeud de commutation comprend un premier moyen de commutation raccordé avec ladite deuxième voie de fibre optique et un deuxième moyen de commutation raccordé à ladite première voie de fibre optique.

5. Réseau local de la revendication 4 comprenant de plus un moyen de retard de commutation (122) raccordé avec la sortie dudit premier détecteur de paquet ayant un retard qui est substantiellement égal au temps nécessaire pour faire fonctionner ledit moyen de commutation.

6. Réseau local de la revendication 5 comprenant de plus un moyen de circuit de commande (121) raccordé avec lesdits premier et deuxième détecteurs de paquets et lesdits premier et deuxième moyens de commutation pour laisser passer sélectivement au deuxième noeud un paquet arrivant ou pour renvoyer par boucle de retour le paquet arrivant audit premier noeud à travers ladite deuxième voie de fibre optique.

7. Réseau local de la revendication 6 dans lequel ledit moyen de retard de commutation a un retard égal substantiellement au temps nécessaire audit moyen de circuit de commande pour déterminer l'action appropriée requise pour un paquet arrivant plus le temps nécessaire audit circuit de commande pour faire fonctionner ledit moyen de commutation plus le temps qui résulte de la division du nombre de bits dans un en-tête de paquet par le débit des bits de l'en-tête de paquet.

FIG.1

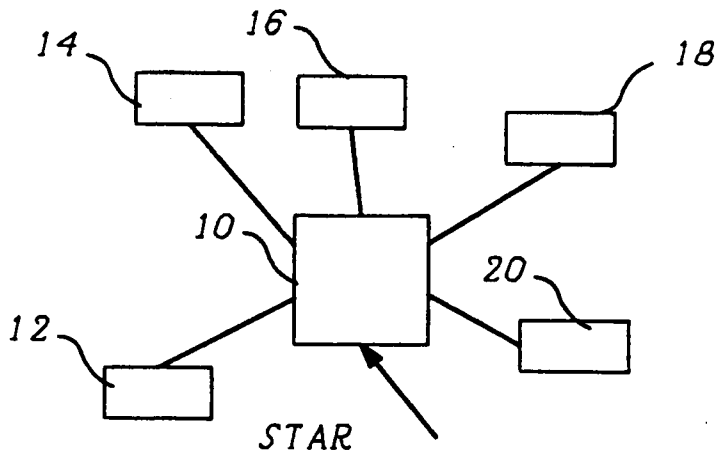

FIG.2

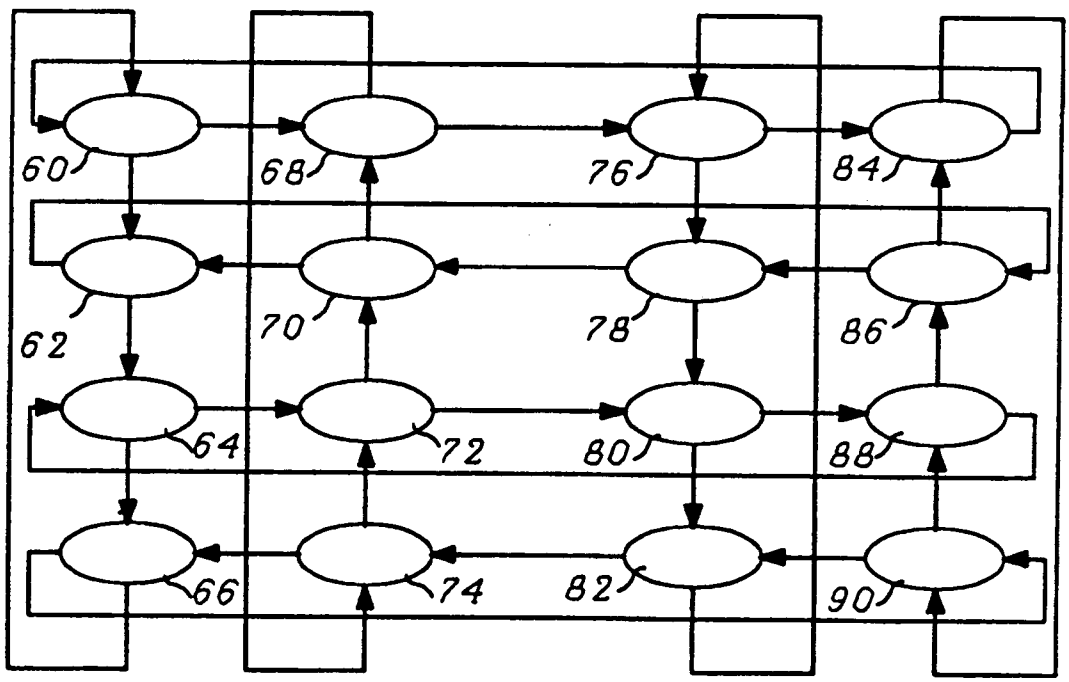

FIG. 3

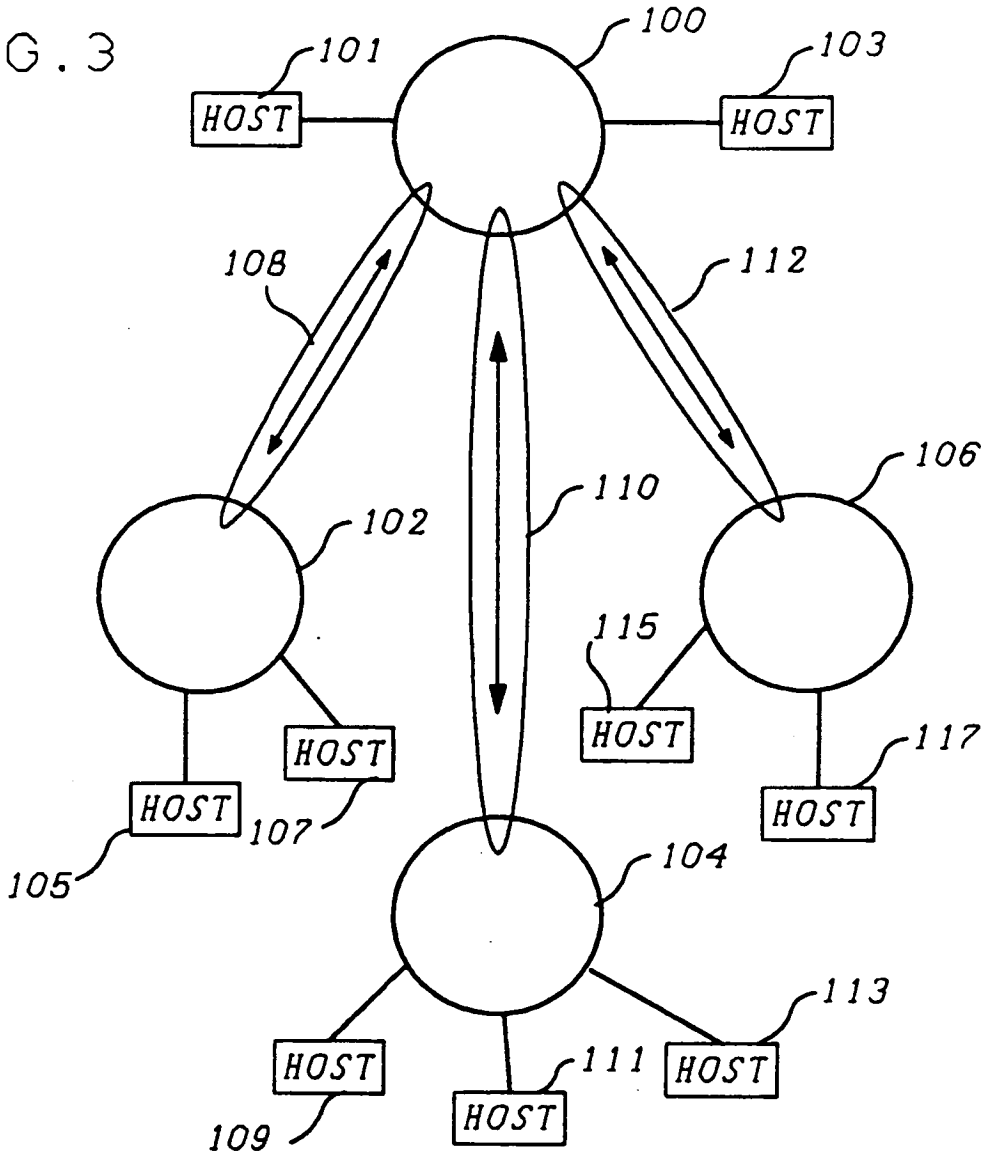
100
101
HOST
103
HOST
108
112
110
102
106
115
HOST
HOST
HOST
107
HOST
117
105
104
113
HOST
111
HOST
HOST
109

FIG. 4

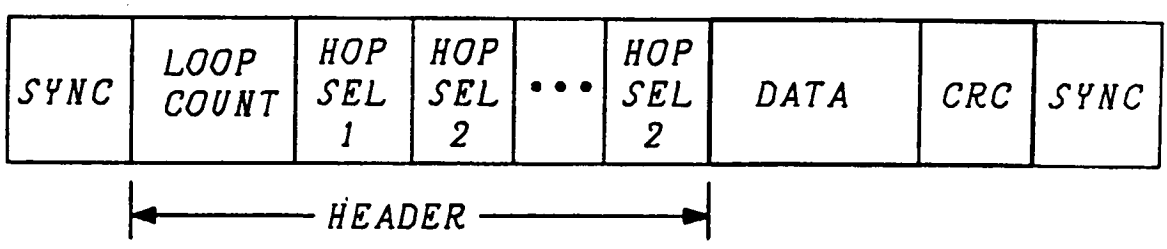
SYNC
LOOP COUNT
HOP SEL 1
HOP SEL 2
• • •
HOP SEL 2
DATA
CRC
SYNC
HEADER

FIG.5

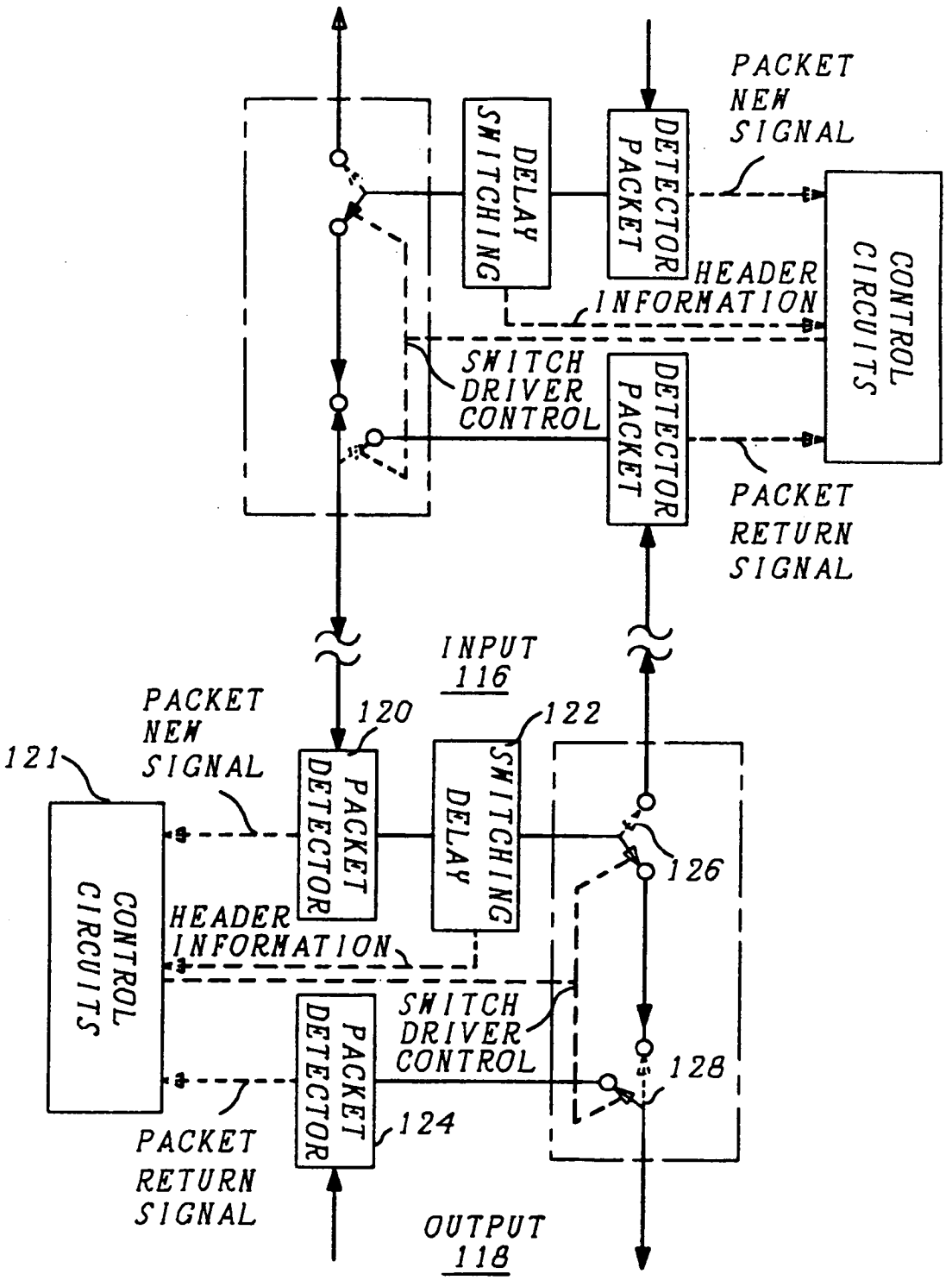
PACKET NEW SIGNAL
DELAY SWITCHING
DETECTOR PACKET
CONTROL CIRCUITS
HEADER INFORMATION
SWITCH DRIVER CONTROL
DETECTOR PACKET
PACKET RETURN SIGNAL
INPUT 116
120
122
PACKET NEW SIGNAL
121
PACKET DETECTOR
SWITCHING DELAY
126
CONTROL CIRCUITS
HEADER INFORMATION
SWITCH DRIVER CONTROL
128
PACKET DETECTOR
124
PACKET RETURN SIGNAL
OUTPUT 118

FIG.6

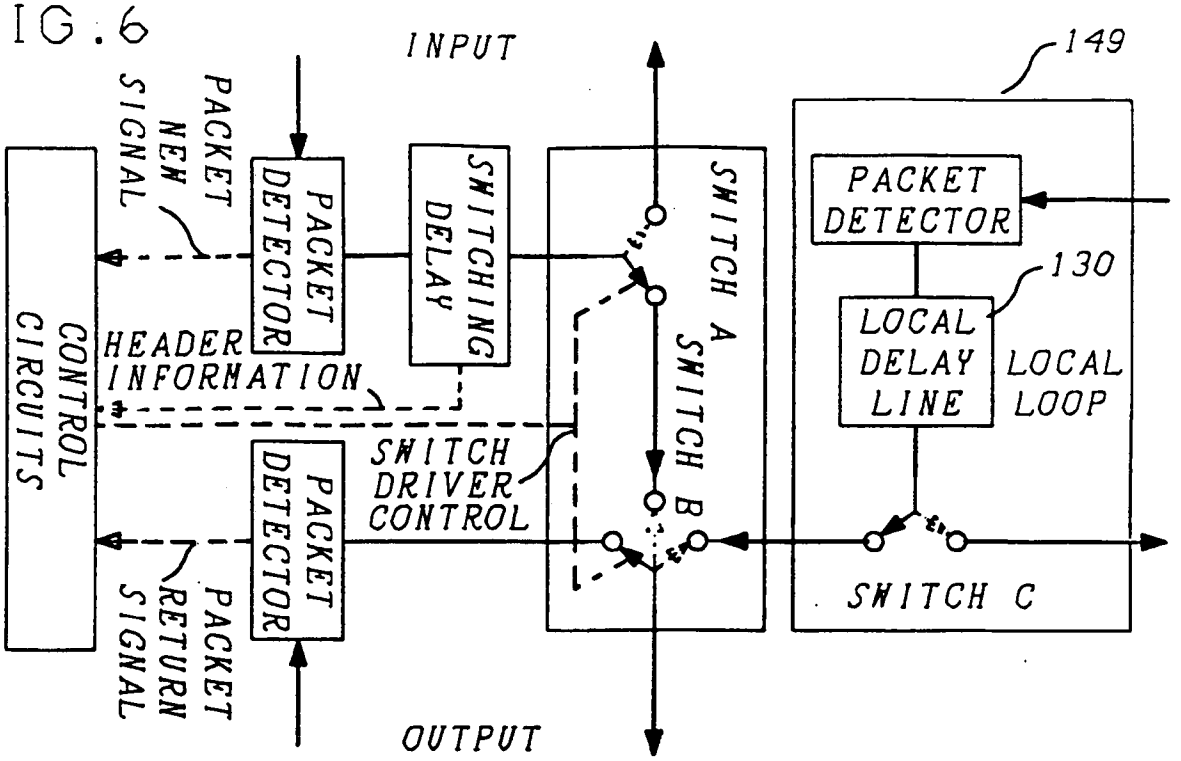
INPUT
149
PACKET
NEW
SIGNAL
PACKET
DETECTOR
SWITCHING
DELAY
SWITCH A
SWITCH B
PACKET
DETECTOR
130
LOCAL
DELAY
LINE
LOCAL
LOOP
CONTROL
CIRCUITS
HEADER
INFORMATION
SWITCH
DRIVER
CONTROL
PACKET
DETECTOR
SWITCH C
PACKET
RETURN
SIGNAL
OUTPUT

FIG.7

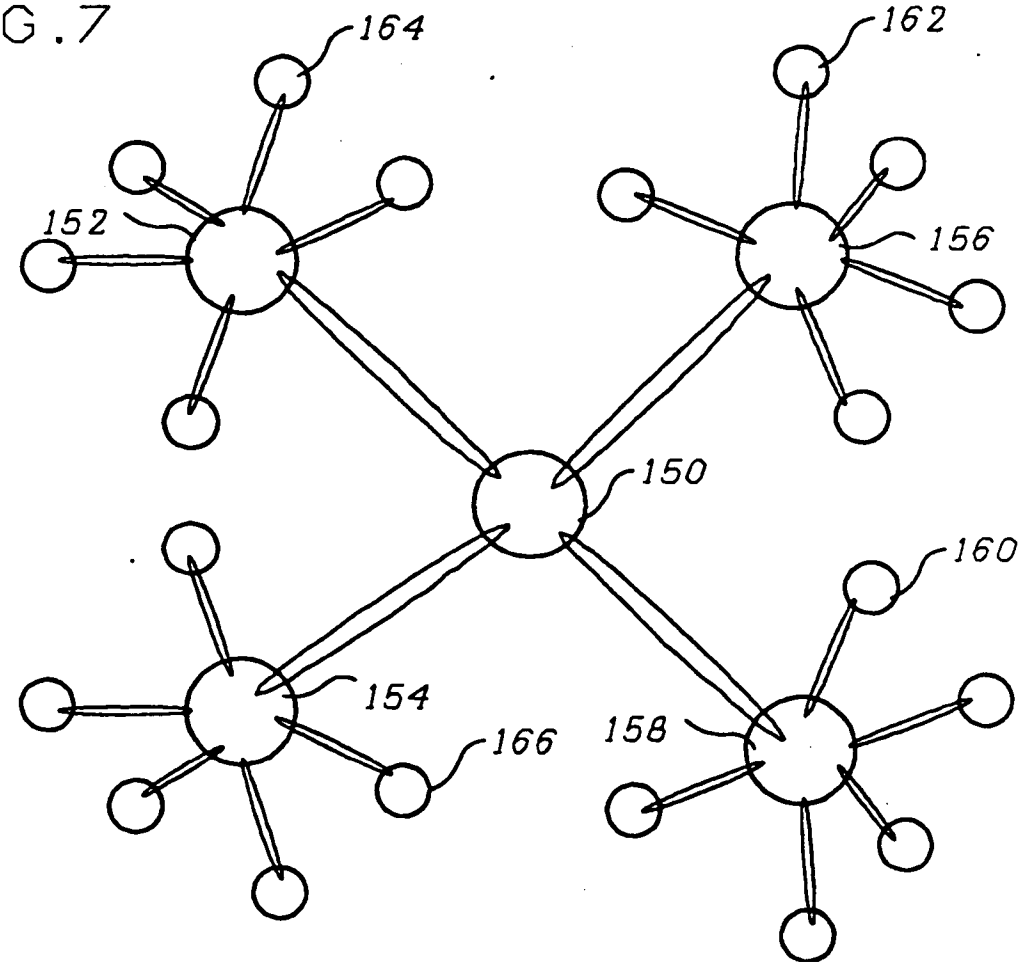
164
162
152
156
150
160
154
166
158

REGISTER ENTRY FOR EP0389097

European Application No EP90301571.7 filing date 14.02.1990

Priority claimed:
23.02.1989 in United States of America - doc: 314724

Designated States DE ES FR GB IT NL

Title PHOTONIC LOCAL/METROPOLITAN AREA NETWORK.

Applicant/Proprietor
AMERICAN TELEPHONE AND TELEGRAPH COMPANY, 550 Madison Avenue, New York, NY 10022, United States of America [ADP No. 50209329002]

Inventor
ZYGMUNT HAAS, 149 Eastwick Court, Matawan, New Jersey 07747, United States of America [ADP No. 57832701001]

Classified to
C7A
H04L H04B

Address for Service
AT&T (UK) LTD, 5 Mornington Road, WOODFORD GREEN, Essex, IG8 0TU, United Kingdom [ADP No. 00053413001]

EPO Representative
CHRISTOPHER MALCOLM KELWAY WATTS, AT&T (UK) LTD. AT&T Intellectual Property Division 5 Mornington Road, Woodford Green Essex IG8 OTU, United Kingdom [ADP No. 50013515001]

Publication No EP0389097 dated 26.09.1990
Publication in English

Examination requested 05.11.1991

Patent Granted with effect from 04.10.1995 (Section 25(1)) with title PHOTONIC LOCAL/METROPOLITAN AREA NETWORK.

04.11.1991 EPO: Search report published on 04.12.1991
Entry Type 25.11 Staff ID. RD06 Auth ID. EPT

20.05.1994 Notification from EPO of change of Applicant/Proprietor details
from
AMERICAN TELEPHONE AND TELEGRAPH COMPANY, 550 Madison Avenue, New York, NY 10022, United States of America [ADP No. 50209329002]
to
AT&T CORP., 32 Avenue of the Americas, New York, NY 10013-2412, United States of America [ADP No. 50209329002]
Entry Type 25.14 Staff ID. RD06 Auth ID. EPT

**** END OF REGISTER ENTRY ****

RENEWAL DETAILS

PUBLICATION NUMBER EP0389097

PROPRIETOR(S)

AT&T Corp., 32 Avenue of the Americas, New York, NY 10013-2412, United States of America

DATE FILED 14.02.1990

DATE GRANTED 04.10.1995

DATE NEXT RENEWAL DUE 14.02.1996

DATE NOT IN FORCE

DATE OF LAST RENEWAL

YEAR OF LAST RENEWAL 00

STATUS PATENT IN FORCE

**** END OF REPORT ****