(12) PATENT APPLICATION **(11)** Application No. **AU 200154084 A1**
(19) AUSTRALIAN PATENT OFFICE

(54) Title
Disposable garment

(51)[7] International Patent Classification(s)
A61F 013/496

(21) Application No: **200154084** (22) Application Date: **2001.06.27**

(30) Priority Data

(31) Number	(32) Date	(33) Country
2000230679	**2000.07.31**	**JP**

(43) Publication Date : **2002.02.07**
(43) Publication Journal Date : **2002.02.07**

(71) Applicant(s)
Uni-Charm Corporation

(72) Inventor(s)
Toshifumi Otsubo; Hiroyuki Soga; Yoshinori Kumasaka

(74) Agent/Attorney
PHILLIPS ORMONDE and FITZPATRICK,367 Collins Street,MELBOURNE VIC 3000

A B S T R A C T

A disposable garment includes a crotch region 10. The crotch region 10 has a pair of folding guides L1, L2 transversely extending across a zone defined between peripheral edge portions 7a of respective leg-openings 7 and intersecting to each other in a transversely middle zone 10a of the crotch region 10 and the crotch region 10 is tucked about the folding guides L1, L2 inwardly of the garment so that the crotch region 10 may be divided by the folding guides L1, L2 into substantially triangular first and second zones S1, S2 defined between the peripheral edge portions 7a of the respective leg-openings 7 and the folding guides L1, L2, respectively, a third zone S3 extending from the folding guides L1, L2 into a front trunk region 9, and a fourth zone S4 extending from the folding guides L1, L2 into a rear trunk region 11 with the first and second zones S1, S2 being disposed between the third and fourth zones S3, S4.

FIG.3

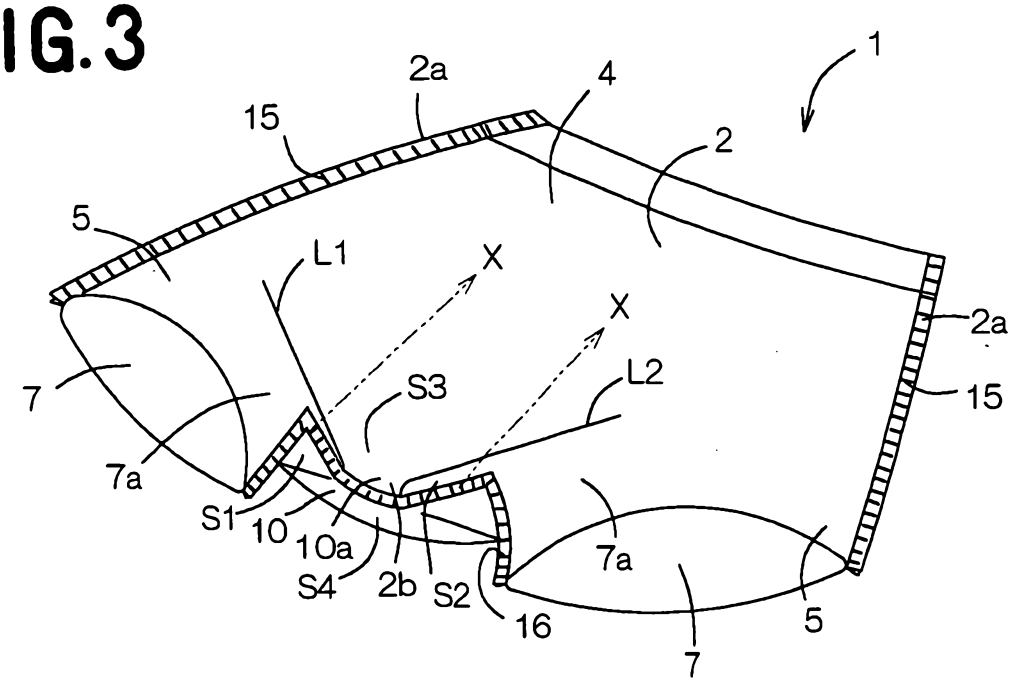
1
2a
4
15
2
5
L1
X
X
2a
7
S3
L2
15
7a
S1
10
10a
7a
S4
2b
S2
16
5
7

FIG.4

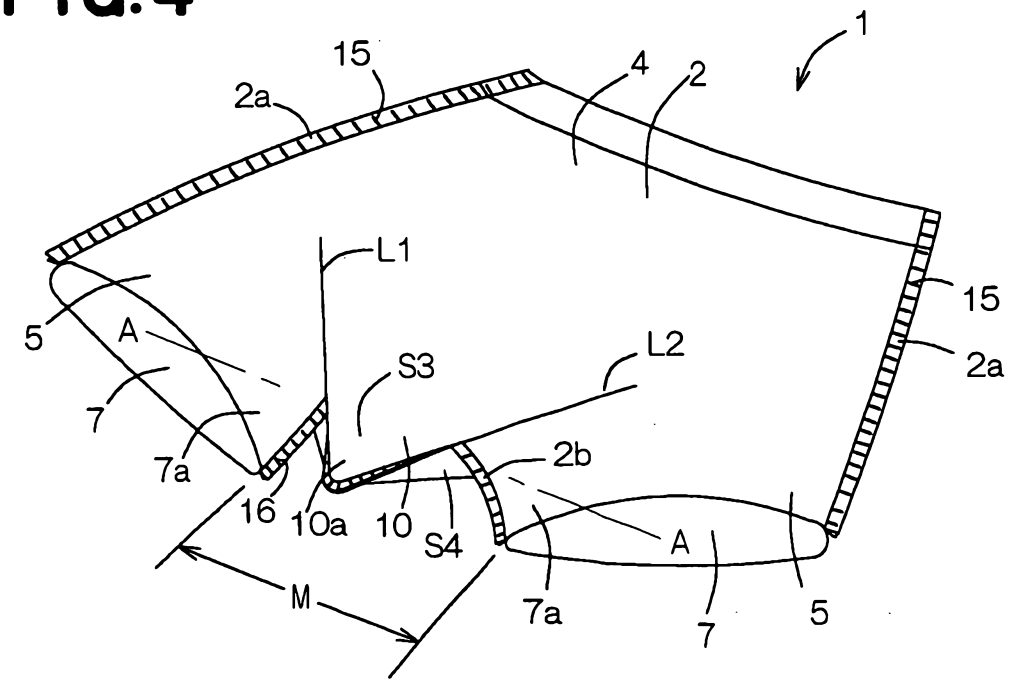
1
15
4
2
2a
L1
15
5
A
L2
S3
2a
7
2b
7a
16
10a
10
S4
A
M
7a
5
7

AUSTRALIA

Patents Act

COMPLETE SPECIFICATION
(ORIGINAL)

Class Int. Class

Application Number:
Lodged:

Complete Specification Lodged:
Accepted:
Published:

Priority

Related Art:

Name of Applicant:

Uni-Charm Corporation

Actual Inventor(s):

Toshifumi Otsubo, Yoshinori Kumasaka, Hiroyuki Soga

Address for Service:

PHILLIPS ORMONDE & FITZPATRICK
Patent and Trade Mark Attorneys
367 Collins Street
Melbourne 3000 AUSTRALIA

Invention Title:

DISPOSABLE GARMENT

Our Ref : 646497
POF Code: 1647/76530

The following statement is a full description of this invention, including the best method of performing it known to applicant(s):

DISPOSABLE GARMENT

This invention relates to a disposable garment adapted to absorb and to hold excretion discharged thereon.

Japanese Patent Application Publications Nos. 1994-63072A and 1994-63073A describe the disposable diaper including the front and rear waist regions separately prepared and placed upon each other and the crotch region partially defined by the front and rear waist regions. In the disposable diaper well known from the disclosure of the Publications, the front and rear waist regions are bonded together along bonding lines extending from said crotch region up- and outward to side edges of the waist regions to describe circular arcs so that the waist-opening is defined at upper part and a pair of leg-openings are defined at lower part of the diaper. Each of the front and rear waist regions includes, in turn, the liquid-pervious topsheet, the liquid-impervious backsheet and the liquid-absorbent panel disposed between these two sheets. In the diaper well known from the disclosure of the Publications, the bonding lines curving up- and outward from the crotch region to the side edges of the waist regions enable the transverse dimension of the crotch region to be dimensioned relatively large.

However, the diaper well known from the disclosure of the foregoing Publication is disadvantageous in that, if the transverse dimension of the crotch region is larger than the corresponding dimension of the wearer's crotch region, the peripheral edge portions of the respective leg-openings may rub the inner sides of the wearer's thighs as the diaper is pulled up along the wearer's waist, obstructing the diaper from being smoothly put on the wearer's body. To avoid this problem, the initial dimension of the crotch region may be appropriately reduced. However, the dimension of the core lying in the crotch region also must be reduced and this would inevitably require corresponding reduction of the core's dimension, i.e., an excretion absorbing capacity achieved in the crotch region would be also deteriorated.

It is an object of this invention to provide a disposable garment improved so that the transverse dimension of the crotch region may be appropriately reduced and thereby the article may be smoothly put on the wearer's body without deterioration of the excretion absorbing capacity achieved in the crotch region.

According to this invention, there is provided a disposable garment including a front trunk region, a rear trunk region opposed to the front trunk region and a crotch region

extending between these trunk regions so as to define a waist-opening at upper part and a pair of leg-openings at lower part of the garment.

The improvement according to this invention is in that the crotch region is tucked about folding guides inwardly of the garment so that the crotch region has a pair of folding guides transversely extend across a zone defined between peripheral edge portions of the respective leg-openings and intersecting to each other in a transversely middle zone of the crotch region and the crotch region is tucked about folding guides inwardly of the article so that the crotch region is divided by the folding guides into substantially triangular first and second zones defined between the peripheral edge portions of the leg-openings and the folding guides, respectively, a third zone extending from the folding guides into the front trunk region, and a fourth zone extending from the folding guides into the rear trunk region with the first and second zones being disposed between the third and fourth zones.

According to one preferred embodiment of this invention, the garment includes a liquid-pervious topsheet, a liquid-impervious backsheet and a liquid-absorbent core disposed between these sheets and wherein the top- and backsheets as well as the core are folded about the folding guides in the first

and second zones.

According to another preferred embodiment of this invention, the garment maintains the first and second zones in tucked-in shapes before the garment is actually used.

Fig. 1 is a perspective view showing a trunks-type disposable diaper according to this invention as partially broken away;

Fig. 2 is a perspective view showing a diaper as viewed from the side of the crotch region;

Fig. 3 is a perspective view showing a diaper as before the first and second zones are tucked in;

Fig. 4 is a perspective view showing the diaper as the first and second zones have been tucked in;

Fig. 5 is a sectional view taken along a line A - A in Fig. 4;

Fig. 6 is a perspective view showing the briefs-type disposable diaper as partially broken away;

Fig. 7 is a perspective view showing the diaper as viewed from the side of the crotch region;

Fig. 8 is a perspective view showing the diaper as the first and second zones are being tucked in; and

Fig. 9 is a perspective view showing the diaper as the

first and second zones have been tucked in.

Details of a disposable garment according to this invention will be more fully understood from the description of the trunks-type disposable diaper and the briefs-type disposable diaper as embodiments given hereunder with reference to the accompanying drawings.

Fig. 1 is a perspective view showing a trunks-type disposable diaper 1 according to this invention as partially broken away and Fig. 2 is a perspective view schematically illustrating the diaper 1 as viewed from the side of the crotch region 10. The diaper 1 has a trunk body 4 formed by a front trunk region 2 and a rear trunk region 3 prepared separately of the front trunk region 2 to cover a wearer's torso and a pair of leg portions 5 formed by lower extensions of the front and rear trunk regions 2, 3 to cover the wearer's respective thighs. The diaper 1 is formed at an upper part of the trunk body 4 with a waist-opening 6 and at leg portions 5 with leg-openings 7. The leg portions 5 circumferentially extend downward to form peripheral edge portions 7a of the leg-openings 7.

The trunk body 4 has a crotch region 10 extending between the leg portions 5. An elastically stretchable member 8 including a plurality of circumferentially extending elements

is attached to a peripheral edge of the waist-opening 6.

Each of the front and rear trunk regions 2, 3 includes a liquid-pervious topsheet 12, a liquid-impervious backsheet 13 and a liquid-absorbent core 14 disposed between these two sheets 12, 13 and entirely covered with and bonded to water-pervious tissue paper (not shown). The core 14 is bonded to at least one of the top- and backsheets 12, 13 with the tissue paper therebetween. The elastic member 8 associated with the waist-opening is disposed between the top- and backsheets 12, 13 in the front and rear trunk regions 2, 3 and bonded under tension to at least one of these sheets 12, 13.

The front and rear trunk regions 2, 3 are put flat together along peripheral edge portions thereof and bonded together at a plurality of welding spots 15 intermittently arranged in the vicinity of transversely opposite side edge portions 2a, 3a of these trunk regions 2, 3 and additionally at a plurality of welding zones 16 arranged intermittently in the vicinity of lower ends 2b, 3b of the front and rear trunk regions 2, 3 extending into the crotch region 10.

In the crotch region 10, a pair of folding guides L1, L2 transversely extend across a zone defined between the peripheral edge portions 7a of the respective leg-openings 7 and intersecting to each other in a transversely middle zone

10a of the crotch region 10, as indicated by two-dotted chain lines in Fig. 2. There leg-openings 7 herein described in reference with Fig. 2 should be understood to be a pair of leg-openings 7 formed along a lower edge of the trunk body 4, as indicated by chain lines in Fig. 2 on the assumption that the diaper 1 has not the leg portions 5. The crotch region 10 is divided by the folding guides L1, L2 into substantially triangular first and second zones S1, S2 defined between the peripheral edge portions 7a and the folding guides L1, L2, respectively, a third zone S3 extending from the folding guides L1, L2 into the front trunk region 2, and a fourth zone S4 extending from the folding guides L1, L2 into the rear trunk region 3.

Fig. 3 is a perspective view showing the diaper as before the first and second zones S1, S2 are being tucked in, Fig. 4 is a perspective view showing the diaper as the first and second zones S1, S2 have been tucked in and Fig. 5 is a sectional view taken along a line A - A in Fig. 4. Figs. 3 and 4 abstractly illustrate the diaper 1 so that it may be easily understood how to tuck in the first and second zones S1, S2.

The diaper 1 is folded along the folding guides L1, L2 and thereby the first and second zones S1, S2 are tucked inwardly of the diaper 1 as indicated by an arrow X in Fig. 3. Referring

to Fig. 4, the front and rear trunk regions 2, 3 are placed upon each other with the first and second zones S1, S2 disposed between the third and fourth zones S3, S4. In the diaper 1 having the first and second zones S1, S2 tucked in, a transverse dimension M of the crotch region 10 is smaller than the corresponding dimension M before the zones S1, S2 are tucked in (See Fig. 2).

With this diaper 1, the top- and backsheets 12, 13 and the core 14 are folded along the folding guides L1, L2 and thereby these top- and backsheets 12, 13 and core 14 are so firmly creased so that said top- and backsheets 12, 13 as well as the core are not easily unfolded. In this way, the first and second zones S1, S2 are well kept in their tucked shapes.

With this diaper 1, the initial transverse dimension of the crotch region 10 can be appropriately reduced by tucking in the first and second zones S1, S2 even if the initial transverse dimension M is larger than a transverse dimension of the wearer's crotch region. With an advantageous consequence, there is no anxiety that the peripheral edge portions 7a of the respective leg-openings 7 might rub the inner sides of the wearer's thighs as the diaper 1 is pulled up along the wearer's trunk, allowing the diaper 1 to be smoothly put on the wearer's body.

The top- and backsheets 12, 13 and the core 14 are unfolded around the respective folding guides L1, L2 as the diaper 1 is pulled up along the wearer's trunk, and thus the first and second zones S1, S2 get out of their tucked-in shapes. Excretion absorbing capacity of the core 14 lying in the crotch region 10 is not affected by unfolding of these first and second zones S1, S2 since the core 14 lying in the crotch region 10 is dimensionally constant.

Fig. 6 is a perspective view showing the briefs-type disposable diaper 20 as partially broken away, Fig. 7 is a perspective view showing the diaper 20 as viewed from the side of the crotch region 25, Fig. 8 is a perspective view showing the diaper 20 as the first and second zones S1, S2 are being tucked in and Fig. 9 is a perspective view showing the diaper 20 as the first and second zones S1, S2 have been tucked in. Figs. 7, 8 and 9 abstractly illustrate the diaper 20.

The diaper 20 includes a liquid-pervious topsheet 22, a liquid-impervious backsheet 21 and a liquid-absorbent core 23 disposed between these two sheets 21, 22 and entirely covered with and bonded to water-pervious tissue paper (not shown). The core 23 is bonded to at least one of the top- and backsheets 22, 21 with the tissue paper therebetween.

The diaper 20 has a front trunk region 24, a rear trunk

region 26 opposed to the front trunk region 24 and a crotch region 25 extending between these trunk regions 24, 26. With this diaper 20, transversely opposite side edge portions 24a, 26a of the front and rear trunk regions 24, 26 are put flat and bonded together at a plurality of welding spots 27 intermittently arranged along the transversely opposite side edge portions 24a, 26a so as to define a waist-opening 28 and a pair of leg-openings 29.

Along a peripheral edge portion of the waist-opening 28, a circumferentially extending elastic member 30 including a plurality of elements is disposed between the top- and backsheets 22, 21 and bonded under tension to at least one of these sheets 21, 22. Similarly, along peripheral edge portions of the respective leg-openings 29, circumferentially extending elastic members 31 each including a plurality of elements are disposed between the top- and backsheets 22, 21 and bonded under tension to at least one of these two sheets 21, 22.

In the crotch region 25 of the diaper 20, a pair of folding guides L1, L2 transversely extend across a zone defined between the peripheral edge portions 29a of the respective leg-openings 29 and intersecting to each other in a transversely middle zone 25a of the crotch region 25, as in the case of the embodiment shown by Fig. 1. The crotch region 25 is divided by the folding

guides L1, L2 into substantially triangular first and second zones S1, S2, a third zone S3 extending from the folding guides L1, L2 into the front trunk region 24, and a fourth zone S4 extending from the folding guides L1, L2 into the rear trunk region 26.

The diaper 20 is folded along the folding guides L1, L2 and thereby the first and second zones S1, S2 are tucked inwardly of the diaper 20 as indicated by an arrow X in Fig. 8. Referring to Fig. 9, the front and rear trunk regions 24, 26 are placed upon each other with the first and second zones S1, S2 disposed between the third and fourth zones S3, S4. In the diaper 20 having the first and second zones S1, S2 tucked in, a transverse dimension M of the crotch region 25 is smaller than the corresponding dimension M before the zones S1, S2 are tucked in (See Fig. 7).

These embodiments of the diaper 1, 20 as illustrated, may be individually packaged with the first and second zones S1, S2 tucked inwardly of the diaper 1, 20 or a plurality of diapers 1, 20 may be packaged in the form of a stack.

The topsheet 12, 22 may be formed with a liquid-pervious sheet such as a nonwoven fabric or porous plastic film, preferably with a liquid-pervious hydrophilic sheet. The backsheet 13, 21 may be formed with a hydrophobic nonwoven

fabric, a liquid-impervious plastic film or a laminated sheet of hydrophobic nonwoven fabric and a plastic film, preferably with a breathable but liquid-impervious sheet. It is also possible to form the backsheet 13, 21 using a composite nonwoven fabric (SMS nonwoven fabric) consisting of a melt blown nonwoven fabric having a high water-resistance and two layers of spun bond nonwoven fabric having high strength and flexibility sandwiching the melt blown nonwoven fabric.

The nonwoven fabric may be selected from a group including spun lace-, needle punch-, melt blown-, thermal bond-, spun bond-, chemical bond- and air through-nonwoven fabric. Component fiber of the nonwoven fabric may be selected from a group including polyolefine-, polyester- and polyamide-based fibers and polyethylene/polypropylene or polyethylene/polyester core-sheath type conjugated fiber and side-by-side-type conjugated fiber.

The core 14, 23 is a mixture of fluff pulp, high absorption polymer grains and thermoplastic synthetic resin fiber compressed to a desired thickness. The high absorption polymer may be selected from a group including starch-, cellulose-based polymer and synthetic polymer.

Bonding of the top- and backsheets 12, 22, 13, 21 and the core 14, 23 as well as attaching of the elastic member 8, 30,

31 may be carried out using suitable adhesive such as a hot melt adhesive or a technique of welding such as sonic sealing or heat-sealing.

In the disposable garment according to this invention, the first and second zones of the crotch region are tucked about the respective folding guides inwardly of the garment so that the first and second zones divided by the folding guides may be disposed between the third and fourth zones of the crotch region. The transverse dimension of the crotch region can be thereby reduced with respect to the corresponding dimension before the first and second zones are tucked in. With an advantageous consequence, there is no anxiety that the peripheral edge portions of the respective leg-openings might rub the inner sides of the wearer's thighs as the diaper is pulled up along the wearer's trunk, allowing the diaper to be smoothly put on the wearer's body.

Furthermore, the other important feature lies in that the excretion absorbing capacity of the core in the crotch region is not affected by reduction of the crotch region's transverse dimension due to tucking-in of the first and second zones. This is because that a transverse dimension of the core lying in the crotch region is not affected by such reduction of the crotch region's transverse dimension.

WHAT XXIS XCLAIMED XXIS:
THE CLAIMS DEFINING THE INVENTION ARE AS FOLLOWS:

1. A disposable garment including a trunk body formed by a front trunk region, a rear trunk region opposed to said front trunk region and a crotch region extending between said front and rear trunk regions so as to define a waist-opening at an upper part of said trunk body and a pair of leg-openings at a lower part of said trunk body, wherein:

said crotch region has a pair of folding guides transversely extend across a zone defined between peripheral edge portions of the respective leg-openings and intersecting to each other in a transversely middle zone of said crotch region and said crotch region is tucked about folding guides inwardly of said article so that said crotch region may be divided by said folding guides into substantially triangular first and second zones defined between said peripheral edge portions of said leg-openings and said folding guides, respectively, a third zone extending from said folding guides into said front trunk region, and a fourth zone extending from said folding guides into said rear trunk region with said first and second zones being disposed between said third and fourth zones.

2. The garment according to Claim 1, wherein said garment

includes a liquid-pervious topsheet, a liquid-impervious backsheet and a liquid-absorbent core disposed between these sheets and wherein said top- and backsheets as well as said core are folded about said folding guides in said first and second zones.

3. The garment according to Claim 1, wherein said garment maintains said first and second zones in tucked-in shapes before said garment is actually used.

DATED: 26th June, 2001
PHILLIPS ORMONDE & FITZPATRICK
Attorneys for:
UNI-CHARM CORPORATION

2000-230679

FIG. 1

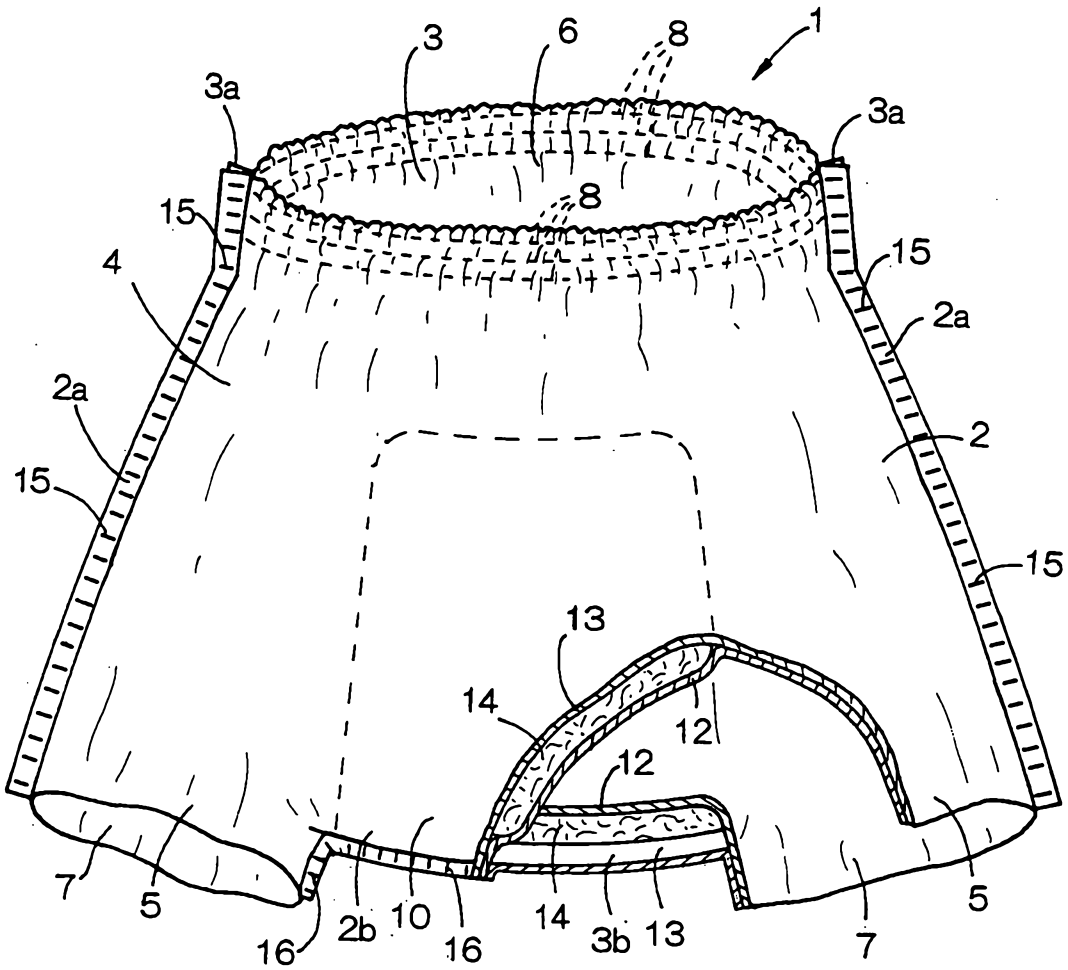

FIG.2

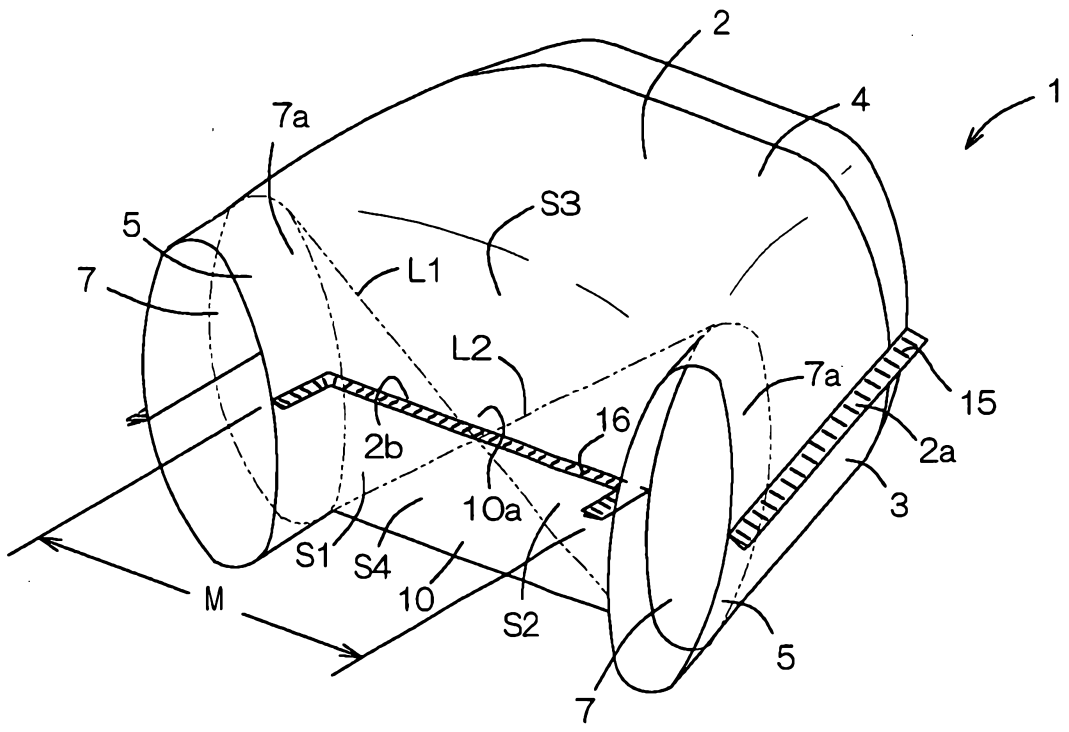

FIG.3

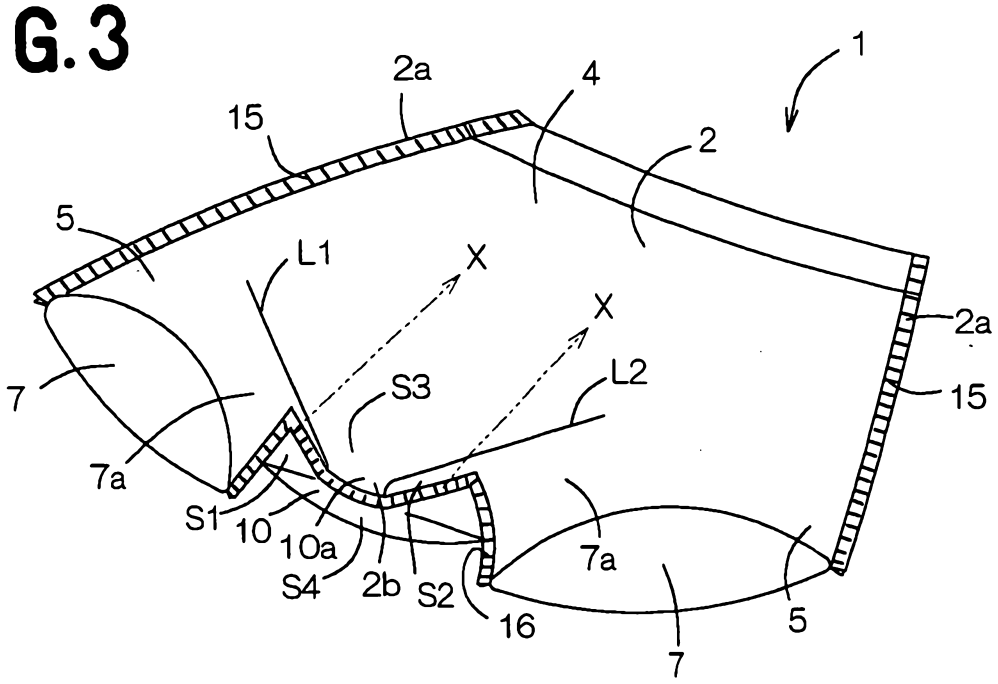
1
2a
4
15
2
5
L1
X
X
2a
7
S3
L2
15
7a
S1
10
10a
7a
S4
2b
S2
16
5
7

FIG.4

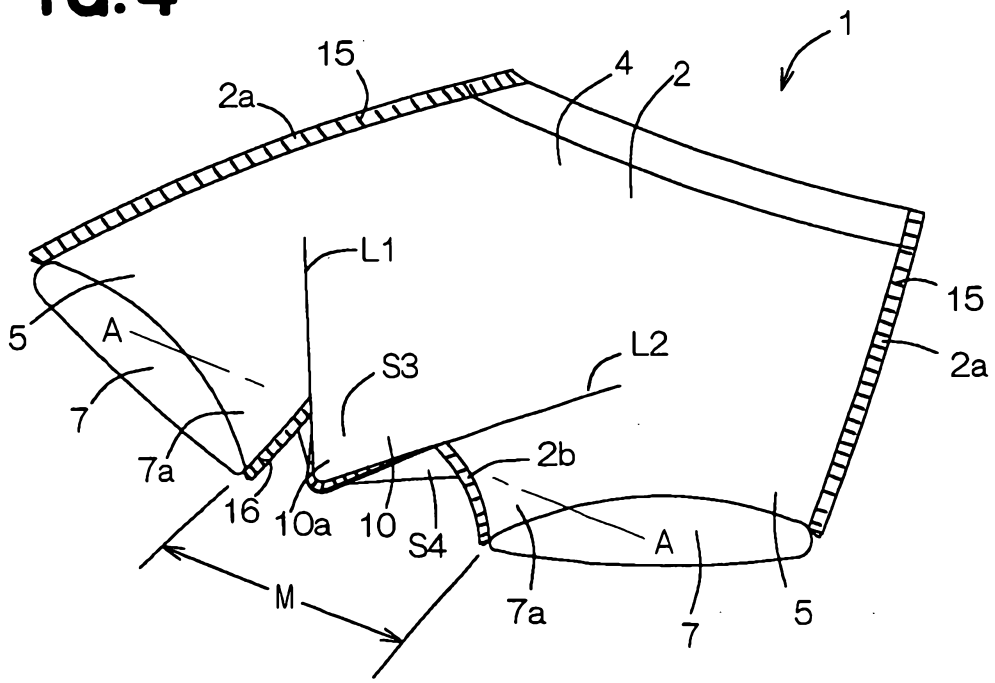
1
15
4
2
2a
L1
15
5
A
S3
L2
2a
7
2b
7a
16
10a
10
S4
A
M
7a
7
5

FIG.5

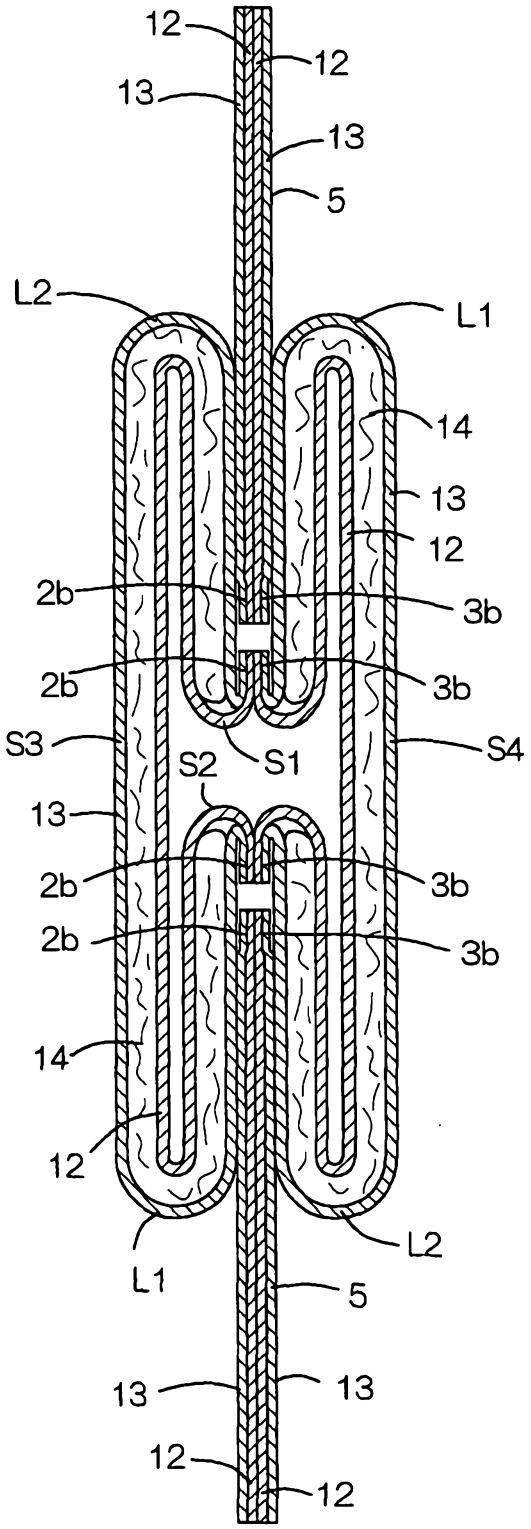
12
12
13
13
5
L2
L1
14
13
12
2b
3b
2b
3b
S3
S2
S1
S4
13
2b
3b
2b
3b
14
12
L1
L2
5
13
13
12
12

FIG.6

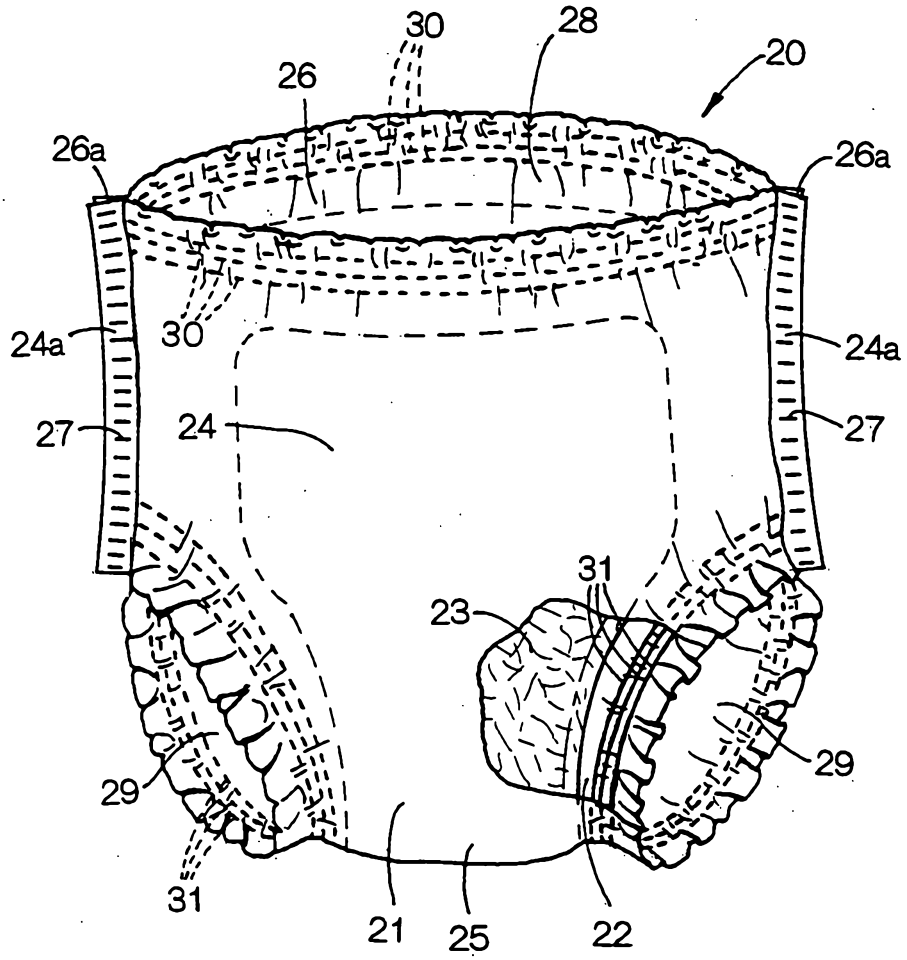

FIG.7

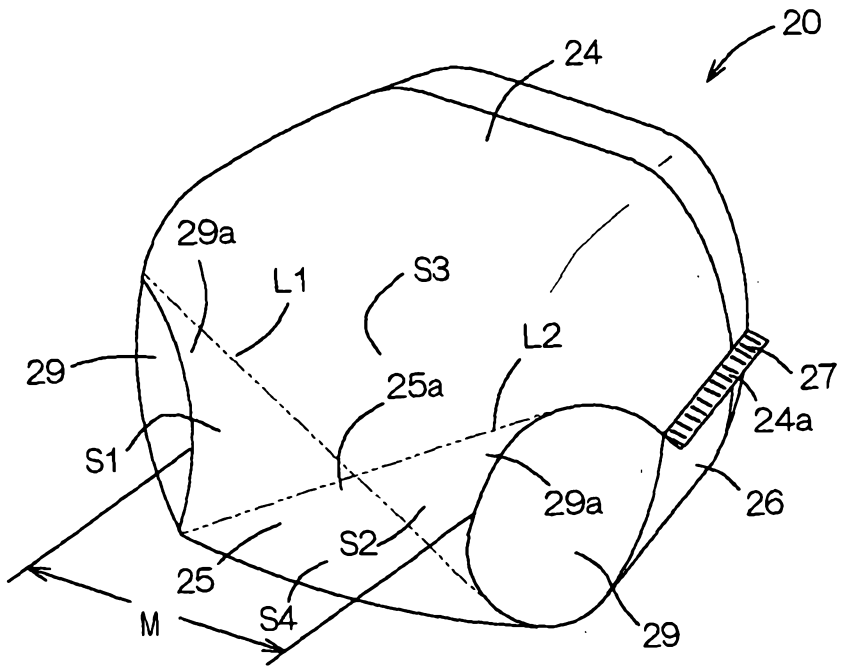

FIG.8

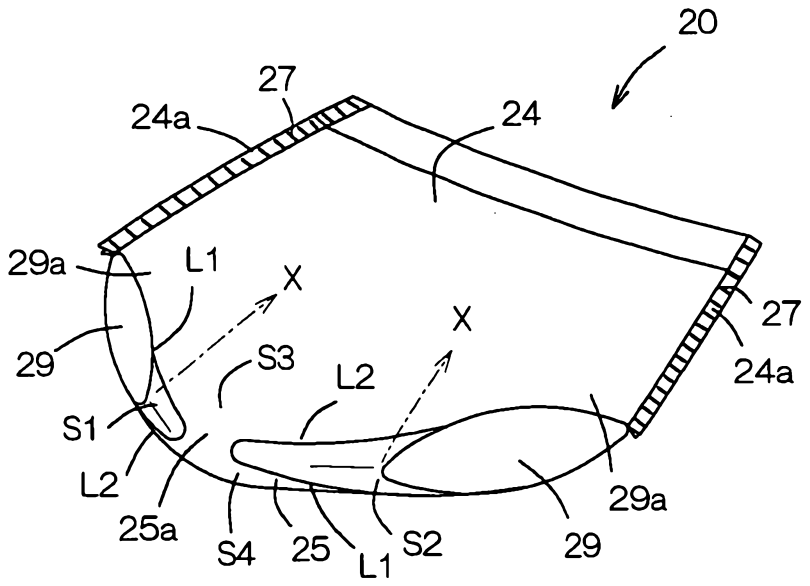
20
27
24a
24
29a
L1
X
X
27
29
S3
L2
24a
S1
L2
29a
25a
S4
25
L1
S2
29

FIG.9

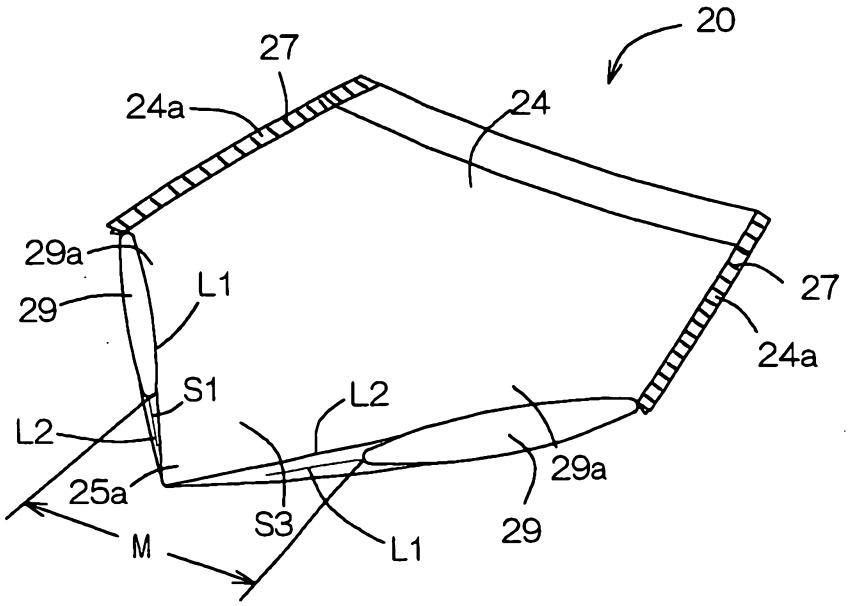
20
27
24a
24
29a
27
29
L1
24a
S1
L2
L2
29a
25a
S3
L1
29
M