PCT WORLD INTELLECTUAL PROPERTY ORGANIZATION
International Bureau

INTERNATIONAL APPLICATION PUBLISHED UNDER THE PATENT COOPERATION TREATY (PCT)

(51) International Patent Classification 5 :
C09B 31/147, 31/30, 33/18, 35/50, 5/02, 25/00, 3/74, 57/00, C09K 19/56, 19/58, 19/30, 19/32, 19/34

A1

(11) International Publication Number: **WO 94/28073**

(43) International Publication Date: 8 December 1994 (08.12.94)

(21) International Application Number: PCT/US94/05493

(22) International Filing Date: 20 May 1994 (20.05.94)

(30) Priority Data:
93027586 21 May 1993 (21.05.93) RU

(71) Applicant *(for all designated States except US)*: RUSSIAN TECHNOLOGY GROUP [US/US]; Suite 214, 1670 S. Amphlett Boulevard, San Mateo, CA 94402 (US).

(72) Inventors; and
(75) Inventors/Applicants *(for US only)*: GVON, Khan Ir [RU/RU]; pr. Patsaeva, 14-26, Moscow Region, 141700, Dolgoprudniy City (RU). BOBROV, Yuri A. [RU/RU]; Zelenograd., 906-128, Moscow, 103575 (RU). BYKOV, Victor A. [RU/RU]; Zelenograd., 815-200, Moscow, 103527 (RU). IGNATOV, Leonid Y. [RU/RU]; ul. Angarskaia, 20-3-81, Moscow, 127635 (RU). IVANOVA, Tatiana D. [RU/RU]; Zelenograd., 200-"G"-144, Moscow, 103305 (RU). POPOV, Sergei I. [RU/RU]; ul. Profsoyuznaia, 96-4-11, Moscow, 117485 (RU). SHISHKINA, Elena Y. [RU/RU]; ul. Angarskaia, 57-2-94, Moscow, 127412 (RU). VOROZHTSOV, Georgiy N. [RU/RU]; ul. Sadovaia-Spasskaia, 21-268, Moscow, 107078 (RU).

(74) Agents: SHENKER, Michael et al.; Skjerven, Morrill, MacPherson, Franklin & Friel, Suite 700, 25 Metro Drive, San Jose, CA 95110 (US).

(81) Designated States: JP, US, European patent (AT, BE, CH, DE, DK, ES, FR, GB, GR, IE, IT, LU, MC, NL, PT, SE).

Published
With international search report.

(54) Title: THERMOSTABLE AND LIGHTFAST DICHROIC LIGHT POLARIZERS

(57) Abstract

Polarizing coatings are formed from dyestuffs which provide a stable liquid crystalline phase in a wide range of concentrations, temperatures and pH-values. Particles formed by aggregates of the liquid crystal molecules are oriented in a predetermined direction to polarize light. The stability of the liquid crystalline state allows orienting the particles by mechanical forces such as a shearing force applied when the liquid crystal (10) is spread on a support surface (20) by a knife-like doctor (90) or a tension deformation force acting on the meniscus of the liquid crystal deposited between two surfaces (20, 30) as the surfaces are peeled off one another. As a result, the polarizing coatings are formed in some embodiments by simple methods. In some embodiments, the polarizing coatings have a high lightfastness, a high thermal stability, and a high dichroic ratio.

FOR THE PURPOSES OF INFORMATION ONLY

Codes used to identify States party to the PCT on the front pages of pamphlets publishing international applications under the PCT.

AT	Austria	**GB**	United Kingdom	**MR**	Mauritania
AU	Australia	**GE**	Georgia	**MW**	Malawi
BB	Barbados	**GN**	Guinea	**NE**	Niger
BE	Belgium	**GR**	Greece	**NL**	Netherlands
BF	Burkina Faso	**HU**	Hungary	**NO**	Norway
BG	Bulgaria	**IE**	Ireland	**NZ**	New Zealand
BJ	Benin	**IT**	Italy	**PL**	Poland
BR	Brazil	**JP**	Japan	**PT**	Portugal
BY	Belarus	**KE**	Kenya	**RO**	Romania
CA	Canada	**KG**	Kyrgystan	**RU**	Russian Federation
CF	Central African Republic	**KP**	Democratic People's Republic of Korea	**SD**	Sudan
CG	Congo			**SE**	Sweden
CH	Switzerland	**KR**	Republic of Korea	**SI**	Slovenia
CI	Côte d'Ivoire	**KZ**	Kazakhstan	**SK**	Slovakia
CM	Cameroon	**LI**	Liechtenstein	**SN**	Senegal
CN	China	**LK**	Sri Lanka	**TD**	Chad
CS	Czechoslovakia	**LU**	Luxembourg	**TG**	Togo
CZ	Czech Republic	**LV**	Latvia	**TJ**	Tajikistan
DE	Germany	**MC**	Monaco	**TT**	Trinidad and Tobago
DK	Denmark	**MD**	Republic of Moldova	**UA**	Ukraine
ES	Spain	**MG**	Madagascar	**US**	United States of America
FI	Finland	**ML**	Mali	**UZ**	Uzbekistan
FR	France	**MN**	Mongolia	**VN**	Viet Nam
GA	Gabon				

THERMOSTABLE AND LIGHTFAST DICHROIC LIGHT POLARIZERS

BACKGROUND OF THE INVENTION

The present invention relates to colored thermostable and lightfast dichroic polarizers based on water-soluble organic dyestuffs with sulfonic groups, and to processes of preparation thereof.

There exist dichroic polarizers produced by application of a true solution of a dichroic material on a substrate surface, solvent evaporation from the surface while at the same time bringing the material into the nematic phase, subjecting the material molecules to orienting influence and to mild solidifying influence to cause the material to be solidified in the oriented state. See U.S. Patents No. 2,400,877 and 2,544,659. The dichroic nematic materials are water- and alcohol-soluble organic dyestuffs which enter the nematic state on the substrate surface immediately.

Dichroic polarizers from the above materials consist of a thin film of molecularly oriented dyestuff

applied on a support surface. Such a film of dyestuff may be considered as a "polarizing coating". This term is used hereinbelow. In-service characteristics of polarizing coatings depend mainly on the dyestuffs' properties in contrast to dichroic polarizers based on stretched polymeric films mass-dyed with organic dyestuffs. See U.S. Patents No. 5,007,942 and 5,059,356. The characteristics of the latter polarizers depend also on the polymer base properties.

According to aforementioned U.S. Patents No. 2,400,877 and 2,544,659 the dyestuff solution is applied on a surface to which anisotropy was preliminarily imparted by mechanical rubbing. The orientation of dyestuff molecules takes place under influence of surface anisotropy when the solution is transferred through the nematic liquid crystalline state. This transfer is carried out directly on the support surface under solvent evaporation. Specific conditions must be satisfied to prevent deorientation of the dye molecules.

Known dichroic polarizers based on polarizing coatings have the following disadvantages:

1) these dichroic polarizers have low polarizing characteristics because these polarizers are based on dyestuffs which exist in the nematic liquid-crystalline phase a limited time only. This, together with a high viscosity of such a phase, does not allow ordering the dyestuff molecules in an effective manner;

2) the dichroic polarizers have low lightfastness and heat resistance;

3) the manufacturing process does not combine the orienting influence and application of dyes to the surface into one stage to be performed at the same time;

4) the dichroic polarizers cannot be prepared without an external orienting influence by, for example, rubbing or electric or magnetic field.

SUMMARY OF THE INVENTION

The present invention provides in some embodiments thermostable and lightfast dichroic polarizers which are based on polarizing coatings and which have high polarizing characteristics.

These coatings are attained in some embodiments by using dichroic polarizers based on water soluble organic dyestuffs of the formula {Chromogen} $(SO_3M)_n$ and their mixtures, where the chromogen provides a dyestuff that is capable of existing in the liquid crystalline state, and M is a suitable cation. In some embodiments, water soluble organic dyes such as sulphonic acids of azo- or polycyclic compounds, or their salts, represented by formulas I-VII, and their mixtures are used as a film-forming component in the material for polarizing coatings, wherein formulas I-VII are as follows:

Formula I:

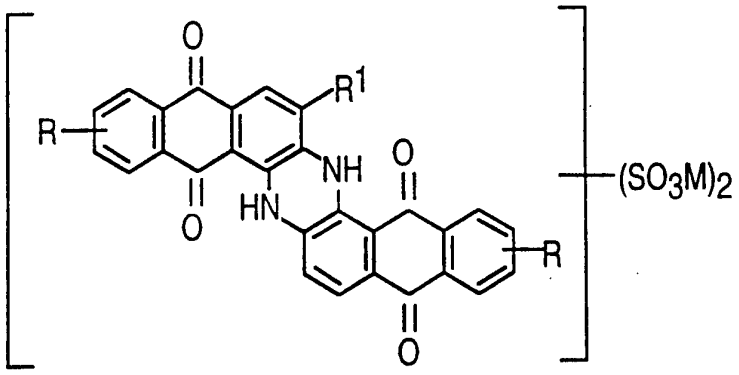

where:

R^1 = H, Cl;

R = H, Alk, ArNH, or ArCONH;

AlK is an alkyl group;

Ar is a substituted or unsubstituted aryl radical;

M is H^+, a metal of the first group, or NH_4^+.

Formula II:

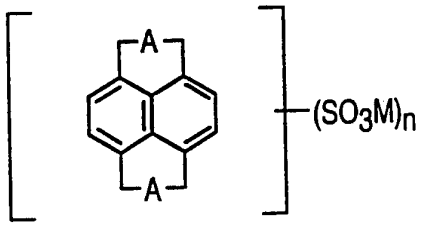

A:

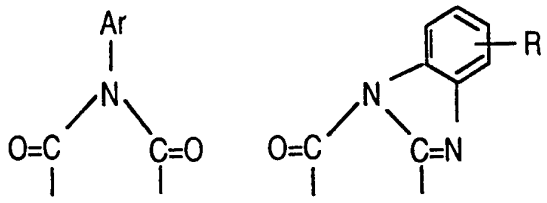

a) b)

where:

R is H, an alkyl group, a halogen, or an alkoxy group;

Ar is a substituted or unsubstituted aryl radical;

n = 2-3;

M is as in formula I above.

Formula III:

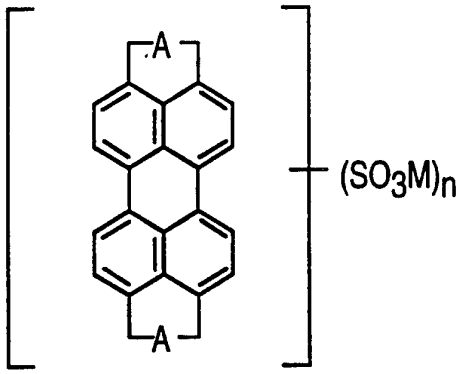

where A, M, n are as in formula II above.

Formula IV:

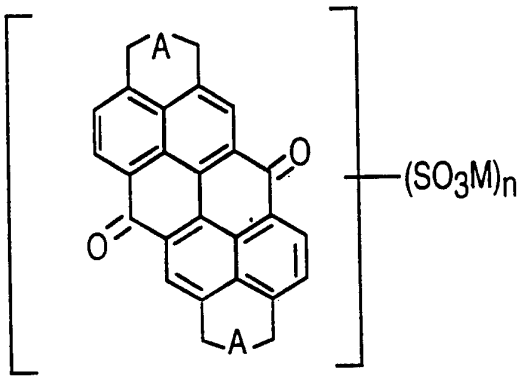

where A, M, n are as in II above.

Formula V:

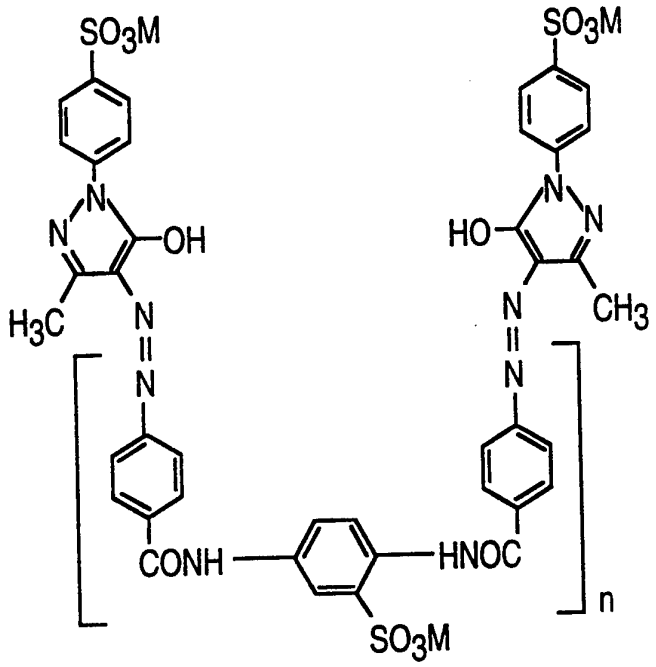

where M is as in I above, and n = 3-5.

Formula VI:

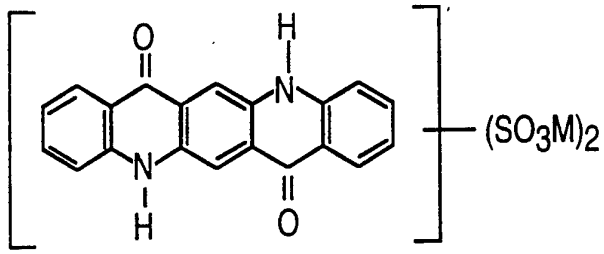

where M is as in I above.

Formula VII:

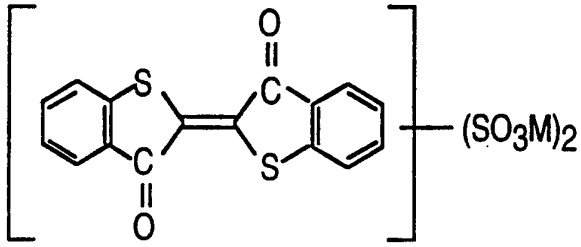

where M is as in I above.

In some embodiments of type I compounds, one or more of relations (1), (2) and (3) hold true, wherein:

(1): Alk is an alkyl group with one to four carbon atoms, preferably with 1 to 2 carbon atoms (CH_3, C_2H_5).

(2): Ar is a substituted or unsubstituted phenyl radical; a suitable substituent for the phenyl radical is Cl. Thus in some embodiments, Ar is C_6H_5 or 4-ClC_6H_4.

(3),: M = H^+, Li^+, Na^+, K^+, Cs^+, or NH_4^+.

In some embodiments of the compounds of formulas II - VII, one or more of relations (3), (4) and (5) hold true, wherein:

(4): R = H; or an alkyl group with 1 to 4 carbon atoms, and preferably with 1 to 2 carbon atoms (CH_3, C_2H_5); or an alkoxy group with 1 to 2 carbon atoms (preferably methoxy CH_3O); or Br; or Cl.

(5): Ar is a substituted or unsubstituted phenyl radical. Thus, in some embodiments, Ar is C_6H_5, 4-$CH_3OC_6H_4$ (CH_3O is a substituent), 4-$C_2H_5OC_6H_4$, 4-ClC_6H_4, 4-$C_4H_9C_6H_4$, or 3-$CH_3C_6H_4$.

The present invention provides also processes for LC orientation. In some embodiments, the processes allow combining the liquid crystal (LC) orientation and application on the surface into one stage so as not to require effecting an anisotropy of the support surface before the LC application. In some embodiments, the LC

is applied between two surfaces. Then the surfaces are separated. During separation, a wedging force between the surfaces induces tension deformation of the LC meniscus in the region of separation. The tension of the thin LC layer causes uniform orientation of the LC molecules. In some embodiments, a shearing force is used to orient the molecules.

In some embodiments, other chromogens of diazo- and polycyclic classes are used than the ones from the formulas I-VII. The chromogens are such that the dyestuffs can form a stable liquid crystalline state in water.

Other features and embodiments of the invention are described below. The invention is defined by the appended claims.

BRIEF DESCRIPTION OF THE DRAWINGS

Fig. 1a is cross-section illustration of a liquid crystal applied on a hard flat support surface and covered by a flexible film during the liquid crystal orientation as the flexible film is being peeled off the hard surface.

Fig. 1b is a cross-section illustration of a liquid crystal between two flexible films as the films are being separated from each other to orient the crystal coating on each film.

Fig. 2 illustrates an application of a liquid crystal on a polymeric film by a "roll to roll" type process.

Figs. 3a-3d illustrate application units in some embodiments of the process of Fig. 2.

Figs. 4 and 5 are schematic illustrations of laminated plates that include a polarizing coating between two glass plates.

Fig. 6 illustrates a laminated circular polarizing plate.

DESCRIPTION OF THE PREFERRED EMBODIMENTS

This invention uses water soluble organic dyestuffs of the formula {Chromogen} $(SO_3M)_n$ and their mixtures. The chromogen is such that the dyestuff is capable of existing in a liquid crystalline phase. M is H^+, NH_4^+, or a metal of the first group. In some embodiments, M is a monovalent cation which is one of Li^+, Na^+, K^+, Cs^+. In some embodiments, water soluble organic dyes of types I-VII or their salts and mixtures are used which, as we have found, form stable lyotropic liquid crystalline phases (nematic and hexagonal phases and their mixtures) within a wide range of concentrations, temperatures and pH-values. In some embodiments, other chromogens of diazo- and polycyclic classes are used such that the dyestuffs can form a stable liquid crystalline state in water. In some embodiments, the lyotropic LC can exist in a

concentration range of about 5 mass.% to about 25 mass.% depending on the dyestuff. In some embodiments of the dyestuffs of formulas I, III, IV and V the lyotropic LC can exist in a concentration range of about 8 mass.% to about 12 mass.%, and for dyes of type II, VI and VII of about 16 mass.% to about 20 mass.%. A suitable temperature range in which the lyotropic LC can exist is in some embodiments from about 5°C to about 40°C, from about 20°C to about 30°C in some embodiments. The pH-values for the lyotropic LC are in some embodiments in the range of 1 to 9, of 4 to 6 in some embodiments.

Some of the compounds of types I-VII were used in non-polarizing situations. Others are novel compounds. The previously known compounds include: the compound of formula I: R=R^1=H (see German Patent 21689 (1908), Frdl. 9, p. 782, incorporated herein by reference), formula III: A=a (where "a" is defined in formula II above), Ar=3-$HSO_3C_6H_4$- (German Patent No. 3703513.4 whose disclosure is hereby incorporated herein by reference), formula V (direct yellow lightfast "O" in "Organic Synthetic Dyes", Catalog, Cherkassy, 1984 incorporated herein by reference), formula VI (U.S. Patent No. 3,388,843 incorporated herein by reference). The water-soluble organic dyestuffs of formulas I-IV, VI and VII are obtained by direct sulfonation of corresponding polycyclic water-insoluble compounds in the case of formulas I-III, VI and VII, or by

sulfonation and simultaneous cycling in the case of formula IV.

The LC stability within a wide range of concentrations, temperatures and pH-values allows realizing a radically different method of lyotropic LC orientation. The method is based on use of mechanical forces for crystal orientation, for example, of a shearing force or of forces inducing a tension deformation of the meniscus formed in the region of wedging separation of two surfaces between which the LC layer is spread. In some embodiments, these methods are simple, they provide good orientation, and they do not require a support surface anisotropy.

The process of dichroic polarizers preparation includes transfer of water-soluble organic dyestuffs into the liquid crystalline phase, application of the liquid crystal thus obtained to the substrate surface and simultaneous mechanical orientation of the liquid crystal molecules, and then solidification of the dyestuff film by solvent evaporation.

It is well known that liquid crystals (LC) are oriented when subjected to a shearing force. See H.G. de Gene, "The Physics of Liquid Crystals", Clarendon Press, Oxford, 1974, Part 5.2.1 incorporated herein by reference. For thermotropic LC such orientation disappears when the shearing force is discontinued. For lyotropic LC, the fixation of the oriented state is possible owing to solvent evaporation from a dyestuff

solution film applied on the support surface and following solidification of the film. According to aforementioned U.S. Patents No. 2,400,877 and 2,544,659 the nematic lyotropic LC is not stable and is formed on the support surface during solvent evaporation from the solution deposited on the support surface. The rate of drying of the isotropic dye solution from the support surface is an important factor. Too fast drying leads to boiling of the solution, and too slow drying causes crystallization such that the LC phase does not form at all or forms only for a short period of time. Hence even if the LC phase is entered, it exists only for a short time. Therefore the orientation of the dye LC by subjecting the LC to a shearing force is not done in this case.

Due to the fact that dyestuffs of types I-VII form stable lyotropic LC, these dyestuffs can be oriented on the support surface by a mechanical shift, that is, by a shearing force. The shift can be carried out simultaneously with the application of dye LC on the support surface.

In contrast with thermotropic LC in which the molecular orientation is lost when the shearing force is removed, the orientation in lyotropic LC can be preserved quite well for a long time due to the high viscosity of such LC. As a result, a high optical anisotropy is achieved when the solvent evaporates and the LC solidifies.

Water-miscible low molecular weight organic compounds (acetone, alcohols, dioxane etc.), antioxidants and/or inhibitors and/or surface active agents and/or film forming agents may be used with the polarizers according to methods known in the art. See, for example, U.S. Patent No. 2,400,877 incorporated herein by reference.

Low molecular weight organic compounds (acetone, alcohols, dioxane type) as additives for viscosity reduction of composition provide uniformity of polarizing coatings application. Use of surface active and film forming agents provides uniformity of coating due to the increased wettability of the support surface.

Antioxidants and inhibitors are added to the dyestuffs in some embodiments to provide chemical stability of the polarizing coatings to external action including adhesives and lacquers.

Fig. 1a illustrates an LC application process in which the LC is oriented by forces inducing tension deformation at the LC meniscus formed at wedging separation of two surfaces between which an LC layer is spread. LC layer 10 is applied on a hard flat support surface 20 and covered by an accessory film 30 which is a polymeric film in some embodiments. Spacers (not shown) between films 20 and 30 maintain a predetermined thickness of LC layer 10. Then film 30 is peeled off at some velocity V which is a constant velocity in some

embodiments. When film 30 is being peeled off, a wedging force acts on LC layer 10 in the region 40 in which film 30 separates from surface 20. This force creates tension deformation that stretches the LC 10 meniscus in the direction τ_1, τ_2. Dyestuff molecules in the LC combine to form thread-like aggregate particles (supra-molecular complexes), and the tension in the thin LC layer orients these particles along the stretching direction τ_1, τ_2. At the same time the dyestuff molecules orient transversely to this direction. (In some embodiments, the molecular planes in each particle and the moments of electron transition are perpendicular to the longitudinal axis of the particle or form an angle close to 90° with the axis.) As the separation region moves right in Fig. 1a, the aggregate particles become oriented by the tension horizontally left to right. Due to the light absorption by the particles, the light transmitted through the resulting polarizing coating will be polarized in the vertical plane parallel to the particles.

During application, the LC is additionally oriented in some embodiments by constant electric or magnetic fields (not shown).

Fig. 1b illustrates another LC application process in which polarizing coatings are formed simultaneously on two polymeric films 30.1, 30.2. Films 30.1, 30.2 are spread between units 50.1, 50.2. LC 10 is applied

between the films. The two films are then pulled up by their upper ends in different directions so that the films separate at the top edges of units 50.1, 50.2. The LC layers on both films get oriented by a wedging force that produces a tension deformation in the meniscus region 40 where the films separate, similarly to the process of Fig. 1a.

In some embodiments, units 50.1, 50.2 are cylinders that rotate around axes parallel to the surfaces of films 30.1, 30.2 as the films are pulled up. LC 10 is applied as follows before the films are pulled up. The top edges of the films are brought above the cylinders 50.1, 50.2 and are spread out at the angles at which the films are later pulled up. LC 10 is applied from the top between the films. The distance by which LC 10 leaks down the films depends on the LC viscosity and on the distance between the two films in the area below the top edges of cylinders 50.1, 50.2.

Polarizing coatings are applied in some embodiments on different kinds of substrates including plastics, silicate glass, silicon, metal. The substrates may have different sizes and hardnesses. A suitable LC application process may depend on the substrate type.

Fig. 2 illustrates a "roll to roll" type application process suitable for forming a polarizing coating on a flexible film 30. Film 30 which is a

polymeric film in some embodiments is unrolled from a feeding roll 60. Film 30 moves horizontally in the direction of arrow 70. Liquid crystal 10 is deposited in the region 80 by an application unit schematically shown at 90. Several embodiments of unit 90 are illustrated in Figs. 3a-3d and are described below. LC 10 is deposited and oriented as the film 30 moves under unit 90. LC 10 is dried with the aid of heater 100 at about 20°C to about 80°C. Forced air or inert gas is also used in some embodiments to accelerate drying. Film 30 with the dry coating 10 over it is taken up by taking roll 110.

In Fig. 3a, application unit 90 is a knife-type doctor. The bottom surface of unit 90 is slightly rounded. LC 10 is deposited immediately to the left of unit 90. As film 30 with liquid crystal 10 passes under unit 90, a shearing force ("mechanical shift" force) acts on the liquid crystal under unit 90 in the direction opposite to the direction of motion of film 30. As a result, the liquid crystal particles get oriented left to right.

In Fig. 3b, application unit 90 is an unrevolving cylinder. The LC orientation occurs similarly to Fig. 3a.

In some embodiments, another revolving or unrevolving cylinder (not shown) is positioned below film 30 and in contact with film 30 to set the distance

between film 30 and application unit 90 and thus to set the thickness of the polarizing coating.

In Fig. 3c, application unit 90 is a drawplate. Liquid crystal 10 is poured into the drawplate and is applied through a hole (chink) at the bottom of the drawplate as film 30 moves past the drawplate. The liquid crystal aggregate particles are oriented by the shearing force applied by the working (bottom) surface of the drawplate, similarly to the cases of Figs. 3a, 3b.

In Fig. 3d, application unit 90 is a rolling cylinder that revolves counter-clockwise. Liquid crystal 10 is deposited immediately to the left of the cylinder. The liquid crystal particles get oriented by the tension force acting on the LC meniscus in the region 40 where the cylinder surface moves up and away from film 30. See the discussion above in connection with Fig. 1a.

In some embodiments of Figs. 2 and 3a-3d, spacers (not shown) are placed under the application unit 90 to set the thickness of the polarizing coating to a desired value. In some embodiments, the spacers are mounted on the edges of unit 90, for example, on the edges of the cylinders of Figs. 3b, 3d.

The thickness of the polarizing coatings ranges in some embodiments from about 0.1 mkm (micrometers) to about 1.5 mkm, from about 0.4 mkm to about 0.8 mkm in some embodiments. In some embodiments, larger

thicknesses are obtained by depositing several layers of polarizing coatings.

In some embodiments, before LC is applied, the surface of film 30 is cleaned by well known techniques, for example, plasma chemical techniques or corona discharge. Additional operations, for example, transfer of the dyestuff layer into a water insoluble form or applying an adhesive or lacquered protective layer, are carried out in some embodiments, if needed, by a "roll to roll" type process using any suitable standard equipment.

Similar processes are used to form polarizing coatings on plates (that is, non-flexible substrates) and sheets (that is, flexible substrates) of materials. The taking and feeding rolls are not used because such substrates are not flexible enough to be rolled into a roll. The substrate surface 30 moves from left to right essentially as shown in Fig. 2. In some embodiments, the substrate 30 does not move, but application unit 90 moves from right to left. The polarizing coating to the right of unit 90 is dried at 20-80°C, preferably with forced air or inert gas.

The above processes of polarizing coatings application allow applying a dyestuff layer simultaneously with carrying out uniform orientation of the dyestuff molecules.

In some embodiments, polygraphic methods such as relief or intaglio printing are used to perform the above LC application processes.

In some embodiments, in order to transfer the polarizing coatings into an insoluble state they are treated with solutions of bivalent metal salts (for example, $BaCl_2$, $CaCl_2$), trivalent metal salts (for example, $AlCl_3$), or tetraalkylammonium salts (for example, benzyl-dimethyl-cetylammonium chloride). Bivalent and trivalent metals that form complex compounds are suitable in some embodiments. Methods of making such salt solutions are well known in the art. The treatment is performed by immersing the substrate with the polarizing coating into a salt solution and then washing the coating with pure water.

In some embodiments, polarizing coatings on polymeric films (polyethylene terephthalate, polycarbonate, triacetylcellulose and other transparent film materials) provide flexible polarizing films having the following advantages over the polarizing films described in the aforementioned U.S. Patents No. 5,007,942 and 5,059,356. The lightfastness is high (6-7 rating on the 8-rating scale). The thermal stability of the polarizing coating is increased to 200-300°C and the thermal stability of the polarizing film is limited only by the thermal stability of the polymeric support. These advantages allow the

polarizing films of the invention to be used in new fields of science and engineering.

The polarizing coating can be protected from mechanical destruction by a transparent layer of lacquer or adhesive or by a laminated structure. Use of a transparent adhesive makes it possible to attach the polarizer to any surface.

The polarizing coating can be applied on a hard flat, spherical or cylindrical, transparent or reflecting surface, and in particular on inorganic or organic glass, on silicate glass spray-coated by a semiconductor layer, and on a silicon plate covered with a sprayed aluminum layer. The obtained polarizing plate can be used for constructing a liquid crystalline cell with an internal polarizer. The polarizing coating on the plate has an orienting influence on the liquid crystal filling the cell. This allows omitting an additional orienting layer used with conventional polarizers. New polarizers in the design of the LC cell permit to eliminate image doubling in displays at a large angle of vision.

Our new polarizers can be successfully used for manufacturing laminated flat glass that includes two glass plates as shown in Fig. 4. The top glass plate is coated with a polarizer. The two glass plates are glued together with a transparent polymeric adhesive 140, for example, polyvinylbutyral.

A laminated linearly polarizing plate using two plates of glass is shown in Fig. 5. Between these two plates of glass a polymeric film 150 is placed with a polarizing coating applied on it. The above mentioned layers are glued together by transparent polymeric adhesive 140 (polyacrylate, polyvinylbutyral, etc.) according to the conventional manufacturing technology for laminated glasses. Optimal gluing temperatures of about 140°C to about 180°C can be used in some embodiments where the thermal stability of the polarizing coatings exceeds such temperatures.

In some embodiments, a birefregent polymeric film (for example, polyethylene terephthalate) is used as a substrate for a polarizing coating in such a way that one of the basic optical axis of the substrate film forms an angle close to 45° with the polarization axis of the coating. Fig. 6 shows coating 10 on birefregent plastic film 30. The arrows "a" and "b" show respectively the directions of the ordinary and extraordinary axes of film 30. Arrow "n" shows the direction of the polarization axis of polarizing coating 10. Angle α between the polarization axis "n" and the extraordinary axes "b" is about 45° as described above. As a result, a circular film polarizer is obtained. The thickness (d) of polymeric film 30 should meet the following condition:

$$d(n_o - n_e) = \frac{\lambda}{4} + m\frac{\lambda}{2}$$

where n_o, n_e are refraction indices of the ordinary and extraordinary rayes, λ is the light wavelength, and m = 1,2,3... (any positive integer).

Using a circular film polarizer in a laminated composition allows obtaining a circularly polarizing plate which can be used in manufacture of screens to increase the image contrast of displays and TV screens.

Dichroic polarizers as well as laminated materials disclosed herein are distinguished by high thermal stability and excellent lightfastness such that these materials are suitable for use in rough production and operation conditions, for example, in production of antireflective screens for displays and TV screens, in automotive industry in manufacture of laminated windshield glasses, in illuminants, in manufacture of glass for construction and architecture, etc. In addition, the polarizers of the invention can be used in the same areas as known polarizers. See, for example, the aforementioned U.S. Patent No. 2,544,659 incorporated herein by reference.

The polarizing coatings of the invention advantageously have a high dichroic ratio. (The dichroic ratio is $D_\perp/D_\parallel$ wherein $D_\perp$ is the optical density with respect to light polarized perpendicularly

to the polarizing plane of the polarizing coating and D_l is the optical density with respect to light polarized parallelly to the polarizing plane.) In some embodiments, the dichroic ratio is about 7.0 or greater, and in some embodiments at least about 8.0, or at least about 10.0, or at least about 11.0, or at least about 12.0, or at least about 22.0, or at least about 23.0.

EXAMPLE 1.

1.1. Synthesis of a dye of the formula I.

50g of indantrene were dissolved in 200ml of chlorosulfonic acid and the mixture was stirred at 80-90°C for 11-12 hours. After being cooled to room temperature the mixture was diluted in 200 ml of water, and the precipitated product was filtered off with suction. The dyestuff was suspended in 300ml of concentrated hydrochloric acid, heated at 90°C for 1 hour, filtered off with suction, washed with concentrated hydrochloric acid and dried. The yield was 39.6g. The dyestuff obtained had the formula I, R=H, R′=Cl.

The following dyestuffs of formula I were similarly obtained from compounds having formula I but without the sulfonic groups:

R = $NHCOC_6H_5$, R^1 = H;

R = $NHCOC_6H_5$, R^1 = Cl;

R = NHC_6H_5, R^1 = Cl;

R = NHC_6H_4Cl, R^1 = Cl;

$R = CH_3$, $R^1 = Cl$;

$R = C_2H_5$, $R^1 = Cl$.

1.2. Manufacture of dye liquid crystal:

1.0 g of 4,4'-disulfo-3-chloroindantrene (formula I, R=H, R'=Cl) free from inorganic salts was dissolved in 100ml of distilled water. The solution was filtered through a "Millipore"-0.1mkm (micrometer) filter and then concentrated by evaporation on a rotary evaporator to the final concentration of 12 mass.%. The presence of the liquid crystal phase was detected by observation through a polarizing microscope equipped by two crossed polarizers.

1.3. Manufacture of dichroic polarizers:

1.3.1. Applying a polarizing coating on a polyethylene terephtalate (PET) film:

1.3.1.1. Applying by a chink drawplate:

(All experiments on applying polarizing coatings were carried out at 25°C and a relative humidity of 70%.)

A PET-film having a thickness of 50mkm, a width of 120mm and a length of 1000 mm was stacked between a pressing cylinder having a diameter of 40mm and a length of 200mm and a drawplate such as drawplate 90 of Fig. 3c. The drawplate had a volume of 5ml, its chink had a width of 300mkm and a length of 100mm. The working surface of the draw plate, especially its edge was carefully polished and had no scratches. LC prepared according to step 1.2 was poured into the

drawplate. To improve the wettability of the PET-film, Triton-X-100 was added to the LC, surfactant concentration was 0.2%. The PET-film was pressed to the drawplate surface by the cylinder with a force of about 10 newton. The PET-film was pulled through at a velocity of 150 mm/s. On the film surface an oriented dye layer was formed. After drying, the layer had a transmission T_O =42%, λ_{max} =645nm, dichroic ratio $D_\perp/D_\parallel$ =22.0.

1.3.1.2. Applying by a doctor in the form of an unrolling cylinder:

A PET-film having a thickness of 50mkm, a width of 120mm and a length of 1000mm was passed between two steel cylinders having a diameter of 20mm and a length of 200mm. The surfaces of the cylinders had been carefully polished. The thickness of the formed coating was predetermined by spacers made from a PET-film having a thickness of 60mkm. The spacers were placed on the edges of one of the cylinders. 2ml of LC were applied in the form of a band having a width of 5-10mm onto the PET-film surface directly ahead of the cylinders. Then the PET-film was pulled between the cylinders at a velocity of 150mm/s. After drying the oriented dye film had the following parameters: T_O =40%, $D_\perp/D_\parallel$ =21.5.

1.3.1.3. Applying by a rolling cylinder:

A cylinder having a diameter of 20mm and a length of 200mm was placed on a plane surface without

SUBSTITUTE SHEET (RULE 26)

possibility to move along it linearly but with a possibility to rotate around the cylinder axis. On the cylinder edges spacers were fixed which were made from a PET-film having a thickness of 10mkm. One edge of the PET-film was passed between the cylinder and the plane surface. The PET-film had a thickness of 50mkm, a width of 200mm and a length of 1000mm. Ahead of the cylinder about 1ml of dye-LC was applied on the PET-film. The PET-film was pulled at a velocity of 50mm/s, so that the rolling cylinder distributed the LC into a uniform layer. After drying the oriented dye film had the following parameters: T_0 =45%, $D_\perp/D_\parallel$ =23.0.

1.3.1.4. Applying by separation of two PET films:

Two cylinders each having a diameter of 20mm and a length of 200mm were fixed immovably on a table at a height of 150mm from the table surface and at a distance of 110mkm from each other (see Fig. 1b). The cylinders could revolve around their respective axes. Edges of two PET films having a thickness of 50mkm were passed between the cylinders from below and pulled up 150mm past the cylinders. 0.5ml of LC were deposited in the space between the cylinders on the surfaces of both films along the horizontal edges parallel to the cylinders' axes. Both films were simultaneously pulled up at different angles (Fig. 1b) at a velocity of 50mm/s. After drying the polarizing coatings on the two films had the following parameters: T_0 =45%, $D_\perp/D_\parallel$ =20.0.

1.3.2. Applying a polarizing coating on a glass plate:

1.3.2.1. Applying by a doctor in the form of an unrevolving cylinder:

A glass plate having a size of 100x100mm^2 and a thickness of 2mm was carefully washed and then dried. 1ml of dye LC was deposited in the form of a band along an edge of the plate at a distance of 20mm from the edge. The plate was fixed on the platform which could move linearly. A doctor in the form of an unrevolving cylinder having a diameter of 20 mm and a length of 200 mm was pressed to the plate. The cylinder axis was parallel to the edge along which the LC was deposited. The thickness of the dye layer was predetermined by two spacers each having a thickness of 10mkm and a width of 5mm which were fixed at a distance of 80mm from each other on the cylinder. The platform with the fixed plate moved at a velocity of 150mm/s in the direction perpendicular to the cylinder axis. An oriented dye layer was formed on the surface of the glass plate which after drying had the following parameters: T_0 =43%, $D_\perp/D_\parallel$ =22.0.

1.3.2.2. Applying by a rolling cylinder:

A prepared glass plate was fixed on a movable platform as described in the preceding example. Dye LC was deposited at a distance of 20mm from one edge of the plate. Two PET-film spacers having a thickness of 10mkm and a width of 5mm were fixed on longitudinal

edges of the plate. These spacers determined the thickness of the polarizing coating. A cylinder able to revolve around its axis and having a diameter of 20mm and a length of 200mm was placed on the plate edge along which the LC had been applied. The platform moved at a velocity of 20mm/s relative to the cylinder so that the cylinder was rolling along the plate surface. Eventually the dye LC was uniformly distributed and oriented on the plate surface. After drying the oriented dye film had the following parameters: T_o =44%, $D_\perp/D_\parallel$ =22.5.

1.3.2.3. Applying by peeling a PET film off a glass plate:

A prepared glass plate having a size of 60x50mm^2 and a thickness of 2mm was fixed on a platform. Two spacers each having a thickness of 10mkm, a width of 5mm and a length of 70mm were placed on the longitudinal edges of the plate. 0.3ml of LC were applied in the form of a band on a transverse edge of the plate. Then the plate was covered by a PET film having a width of 80mm, a length of 100mm and a thickness of 20mkm. The LC under the PET film was distributed fully along a plate surface by a roller having a diameter of 20mm and a length of 100mm. Then the PET film was peeled off beginning at one of the transverse edges at a velocity of 50mm/s. See Fig. 1a. After drying the polarizing coating on the plate had the following parameters: T_o =45%, $D_\perp/D_\parallel$ =22.0.

EXAMPLE 2.

1.5 g of N,N'-diphenyldiimide of 1,4,5,8-naphtalenetetracarbonic acid were dissolved in 15 ml of 15-20% oleum. The mixture was then heated to 50°C and stirred at this temperature for 4-5 hours to the water-solubility test, that is, until the mixture became water-soluble. Then it was cooled to room temperature and poured onto ice. The precipitated dyestuff was filtered off with suction, washed with concentrated hydrochloric acid to separate off sulfo ions and dried. The yield was 1.7 g. This gave the dyestuff of the formula II, A=a, Ar=C_6H_5, n=2.

The following dyestuffs were prepared as in Example 2 from compounds having corresponding formulas but without sulfonic groups (n=0):

Formula II:

A=a, Ar=4-ClC_6H_4;

A=b, R=3-CH_3;

A=b, R=4-C_2H_5;

A=b, R=4-Br;

A=b, R=4-Cl;

A=b, R=4-CH_3O;

A=b, R=4-C_2H_5O;

Formula III:

A=a, Ar=C_6H_5;

A=a, Ar=4-$C_2H_5OC_6H_4$;

A=a, Ar=4-$CH_3OC_6H_4$;

A=a, Ar=4-ClC_6H_4;

A=a, Ar=3-$CH_3C_6H_4$;

A=a, Ar=4-$C_4H_9C_6H_4$;

A=b, R=H;

A=b, R=4-CH_3;

A=b, R=4-Cl;

A=b, R=4-Br;

A=b, R=4-C_2H_5;

Formula IV:

A=a, Ar=C_6H_5;

A=a, Ar=4-$CH_3OC_6H_4$;

A=a, Ar=4-ClC_6H_4;

A=a, Ar=4-$C_2H_5OC_6H_4$;

A=b, R=H;

A=b, R=4-CH_3;

A=b, R=4-C_2H_5;

A=b, R=3-Br;

A=b, R=3-Cl.

EXAMPLE 3.

1.5 g of N,N'diphenyldiimide of 3,4,9,10-perylenetetracarbonic acid were dissolved in 6 ml of chlorosulfonic acid together with 3 ml of 15-20% oleum and the mixture was stirred at 80-90°C for 3 hours. After being cooled to room temperature, the mixture was poured onto ice. The product was filtered off with suction, dissolved in 300 ml of water and subjected to

dialysis to separate off inorganic acids. The dyestuff solution obtained was then evaporated, and the residue was dried. The product weighed 1.74 g and had the formula III, A=a, Ar=C_6H_5. See also German Pat. No. 3703513.4 incorporated by reference herein.

A 98-100% sulfuric acid can be used instead of oleum.

The following dyestuffs were obtained similarly from compounds having corresponding formulas but without sulfonic groups (n=0):

Formula III:

A=a, Ar=C_6H_5;

A=a, Ar=4-$CH_3OC_6H_4$;

A=a, Ar=4-$C_2H_5OC_6H_4$;

A=a, Ar=4-ClC_6H_4;

A=b, R=H;

A=b, R=4-CH_3;

II: A=b, R=H;

A=b, R=4-CH_3;

A=b, R=3-Cl;

IV: A=b, R=H;

A=b, R=4-CH_3;

A=b, R=3-Br.

EXAMPLE 4.

35g of dibenzimidasole 1,1'-binaphthyl-4,4',5,5', 8,8'-hexacarbonic acid were dissolved in 100ml of 20%

oleum and the mixture was stirred at 110-115°C. After about 7 hours the reaction was completed.

135ml of water were added dropwise into the cooled solution. The precipitated dyestuff was filtered off with suction, dissolved in water and subjected to dialysis to separate off inorganic acids. The obtained dyestuff solution was then evaporated, and the residue was dried. The yield was 35.2g. The dyestuff had the structure of the formula IV, A=b,R=H, n=2-3.

The following dyestuffs were obtained similarly from corresponding compounds without sulfonic groups (n=0):

Formula IV:

A=b, R=3-Br;

A=b, R=3-Cl;

A=b, R=4-CH_3;

A=b, R=4-C_2H_5.

EXAMPLE 5.

5g of quinacridone were stirred in 20 ml of 98-100% sulfuric acid at room temperature for 5 hours. The mixture was poured onto ice. The precipitated dyestuff was filtered off by suction and washed carefully to neutral with ethanol/10% strength ammonium carbonate solution mixture. This gave 6g of ammonium salt of dyestuff of formula VI (see also U.S. Patent No. 3,386,843 hereby incorporated herein by reference), n=2.

The dyestuff of formula VII, n=2 was obtained similarly from the corresponding compound having n=0.

Characteristics of polarizing coatings obtained on glass with dyes disclosed herein (all dyes are in the form of ammonium salts) are given in Table 1.

In summary, the claimed water soluble organic dyes of I-VII type and their mixtures are able to form a stable lyotropic liquid crystalline state in a wide range of concentrations, temperatures, and pH-values. These dyes allow:

obtaining polarizing coatings on any surface, both hydrophylic and hydrophobic, without a preliminary orientation of the surface by rubbing;

combining the orienting influence and LC application into one stage;

obtaining lightfast polarizing coatings of 5-7 rating (against 1-2 in prior art);

obtaining thermally resistant (up to 200-300°C) polarizing coatings (against 80-120°C in prior art);

obtaining polarizing coatings with good polarizing characteristics (a dichroic ratio of 10-27 against 3 in prior art);

using standard equipment to obtain uniform polarizing coatings.

Table 1
The performance data of polarizing coatings obtained with claimed compositions.

No.	The performance data			
	Dyestuff	Color	λ_{max} nm	Dichroic ratio $D_{\perp}/D_{\parallel}$
1	formula I, (R=H, R'=Cl)	blue	645	23.0
2	II,A=b,cis-trans isomer	orange	480	10.0
3	III,A=a,R=4-CH_3O-	red	510	10.0
4	III,A=b,R=H	red	500	10.0
5	III,A=a,R=3-CH_3-	red	515	12.0
6	IV,A=b,R=H	reddish-grey	600	11.0
7	IV,A=a,R=4-CH_3-	greenish-grey	590	11.0
8	IV,A=a,R=H	reddish-grey	600	12.0
9	IV,A=b,R=4-CH_3-	greenish-grey	595	11.5
10	IV,A=b,R=H	bluish-grey	580	12.0
11	V	yellow	410	10.0
12	I,R=R'=H	blue	650	12.0
13	VI,R=R'=H	red	510	10.0
14	VII	violet	580	10.0
15	V + I(R=H,R'=Cl) (1:1.6)	green	420 650	7.0 12.0
16	III (A=a,R=4-CH_3-) + I (R=H, R'=Cl) (1:1.5)	violet	520 650	8.0 15.0
17	II(A=b,R=H) + I(R=H,R'=Cl) (1:4.0)	bluish-grey	500 650	9.0 17.0
18	II(A=b,R=H) + III(A=a,R=4-CH_3O) + I(R=H,R'=Cl) (1:0.5:3.0)	reddish-grey	520 650	8.0 16.0
19	Methylene Blue (prior art)	blue	660	3.0

SUBSTITUTE SHEET (RULE 26)

WE CLAIM:

1. A dichroic polarizer comprising a water soluble organic dyestuff of the formula:

{Chromogen} $(SO_3M)_n$

wherein:

the Chromogen is such that the dyestuff is capable of existing in a stable liquid crystalline phase;

M is a cation; and

the dyestuff comprises molecules agregated into particles that are oriented in a predetermined direction to enable the dyestuff to polarize light if the light is transmitted through the dyestuff.

2. The dichroic polarizer of Claim 1 wherein the dyestuff has the formula:

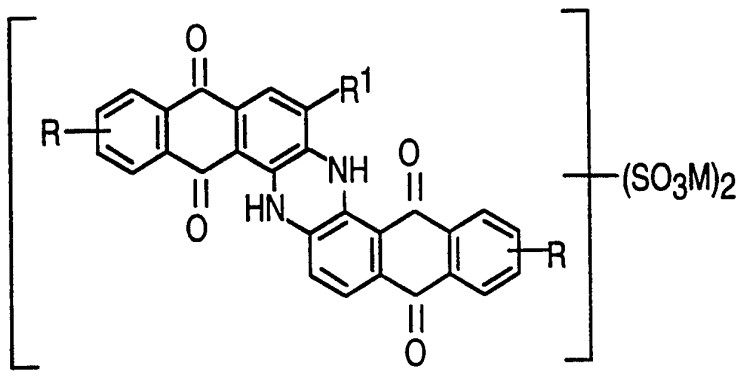

wherein:

R^1 = H or Cl;

R = H, Alk, ArNH, or ArCONH;

Alk is an alkyl group; and

Ar is a substituted or unsubstituted aryl radical.

3. The dichroic polarizer of Claim 2 wherein Alk is an alkyl group with 1 to 4 carbon atoms.

4. The dichroic polarizer of Claim 3 wherein Alk is one of CH_3, C_2H_5.

5. The dichroic polarizer of Claim 2, 3 or 4 wherein Ar is a substituted or unsubstituted phenyl radical.

6. The dichroic polarizer of Claim 5 wherein Ar is one of C_6H_5, $4\text{-}ClC_6H_4$.

7. The dichroic polarizer of Claim 1 wherein the dyestuff has the formula:

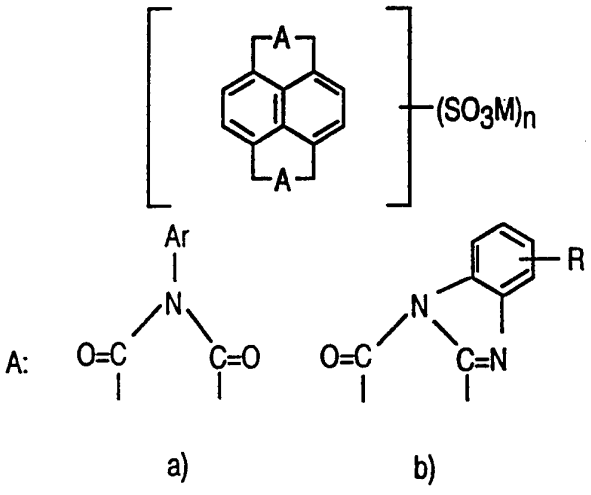

a) b)

wherein

R is H, an alkyl group, a halogen, or an alkoxy group;

Ar is a substituted or unsubstituted aryl radical; and

n = 2 or 3.

8. The dichroic polarizer of Claim 1 wherein the dyestuff has the formula:

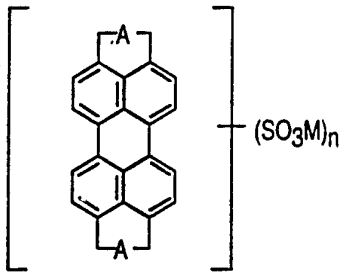

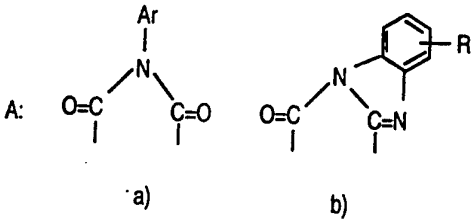

wherein:

R is H, an alkyl group, a halogen, or an alkoxy group;

Ar is a substituted or unsubstituted aryl radical; and

n = 2 or 3.

9. The dichroic polarizer of Claim 1 wherein the dyestuff has the formula:

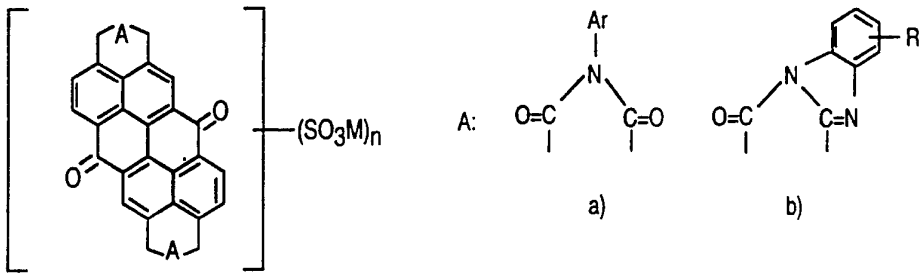

wherein:

R is H, an alkyl group, a halogen, or an alkoxy group;

Ar is a substituted or unsubstituted aryl radical; and

n = 2 or 3.

10. The dichroic polarizer of Claim 1 wherein the dyestuff has the formula:

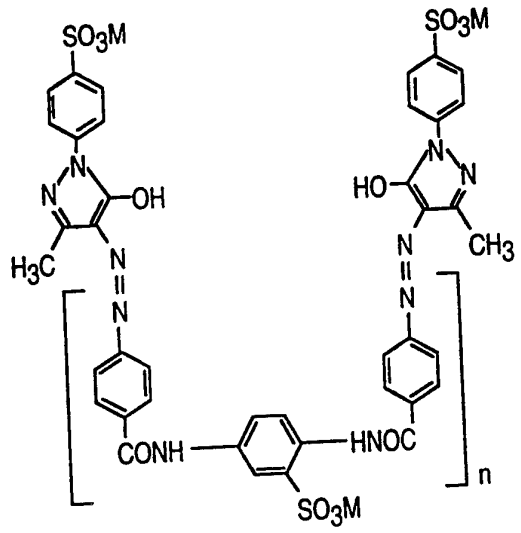

wherein n = 3, 4 or 5.

11. The dichroic polarizer of Claim 1 wherein the dyestuff has the formula:

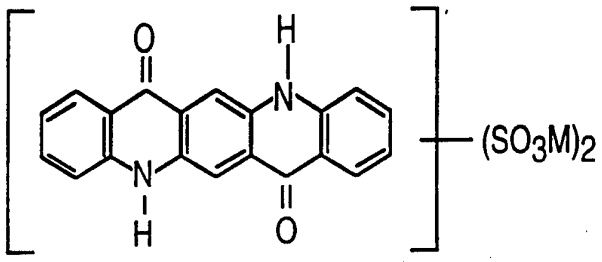

12. The dichroic polarizer of Claim 1 wherein the dyestuff has the formula:

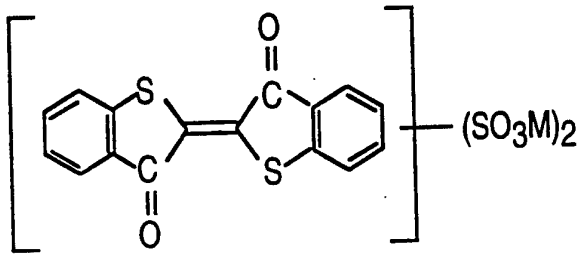

13. The dichroic polarizer of Claim 7, 8 or 9 wherein:

R is H; or an alkyl group with 1 to 4 carbon atoms; or an alkoxy group with 1 to 2 carbon atoms; or Br; or Cl.

14. The dichroic polarizer of Claim 13 wherein R is CH_3 or C_2H_5.

15. The dichroic polarizer of Claim 13 wherien R = CH_3O.

16. The dichroic polarizer of one of Claims 7-9, 13-15 wherein Ar is a substituted or unsubstituted phenyl radical.

17. The dichroic polarizer of Claim 16 wherein R is C_6H_5, 4-$CH_3OC_6H_4$, 4-$C_2H_5OC_6H_4$, 4-ClC_6H_4, 4-$C_4H_9C_6H_4$, or 3-$CH_3C_6H_4$.

18. The dichroic polarizer of one of Claims 1-17 wherein M is H^+, a metal of the first group, or NH_4^+.

19. The dichroic polarizer of Claim 18 wherein M is H^+, Li^+, Na^+, K^+, Cs^+, or NH_4^+.

20. A process for making a light-polarizing element, the process comprising the steps of:

forming a solution of a dyestuff on a surface of a support wherein the dyestuff is in a liquid crystalline state;

orienting, by an orienting force, molecules or supra-molecular complexes of the dyestuff in the liquid crystalline state in a predetermined

direction to enable the dyestuff to polarize transmitted light;

removing the orienting force, the molecules or supra-molecular structures remaining oriented and the dyestuff remaining in the liquid crystalline state; and

evaporating a solvent from the solution while the molecules or supra-molecular complexes of the dyestuff remain oriented.

21. The process of Claim 20 wherien the orienting force is a shearing force.

22. The process of Claim 21 wherein the shearing force is applied by a doctor moving relative to the support surface, the doctor being in contact with the solution.

23. The process of Claim 20 wherein the orienting step comprises the step of tension deformation in a meniscus of the dyestuff solution during a wedging separation of the support surface from another surface contacting the dyestuff solution.

24. The process of Claim 23 wherein the support is a flexible film, the other surface is a surface of another flexible film, and the tension deformation in

the meniscus is created as the two flexible films are being separated from each other.

25. The process of Claim 23, wherein the support surface is a hard surface and the other surface is a surface of a flexible film.

26. The process according to Claim 23, wherein the other surface is a surface of a cylinder rolling relative to the support surface.

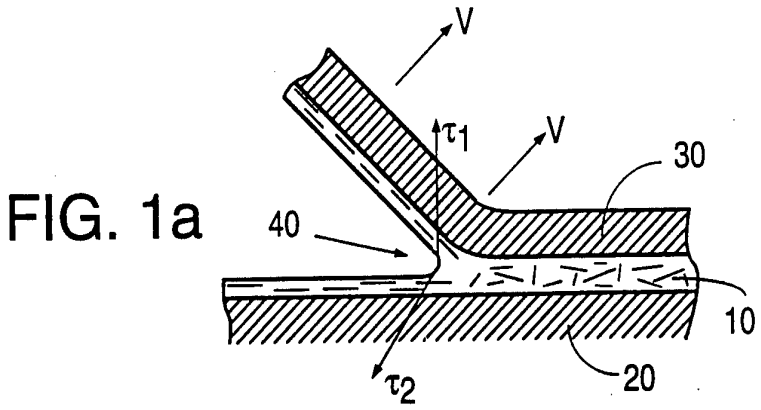

FIG. 1a

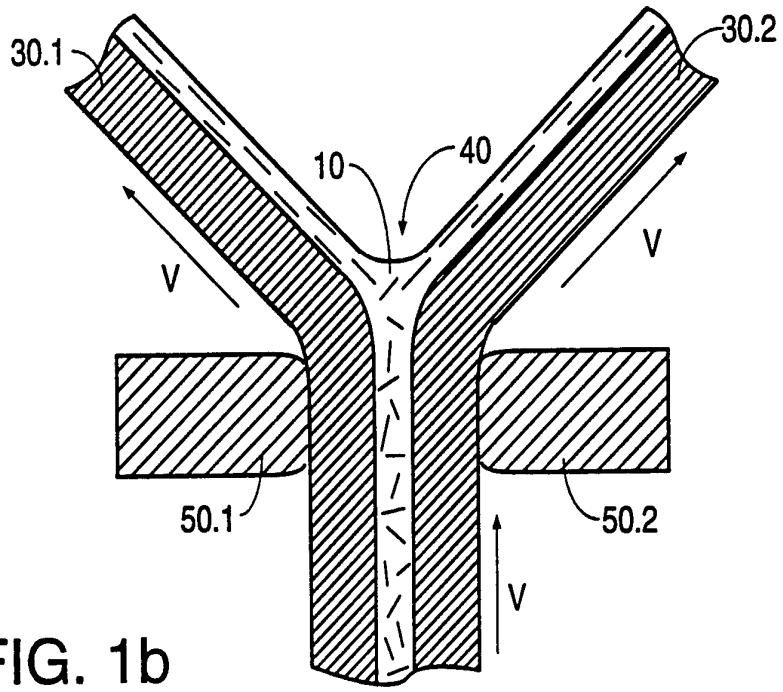

FIG. 1b

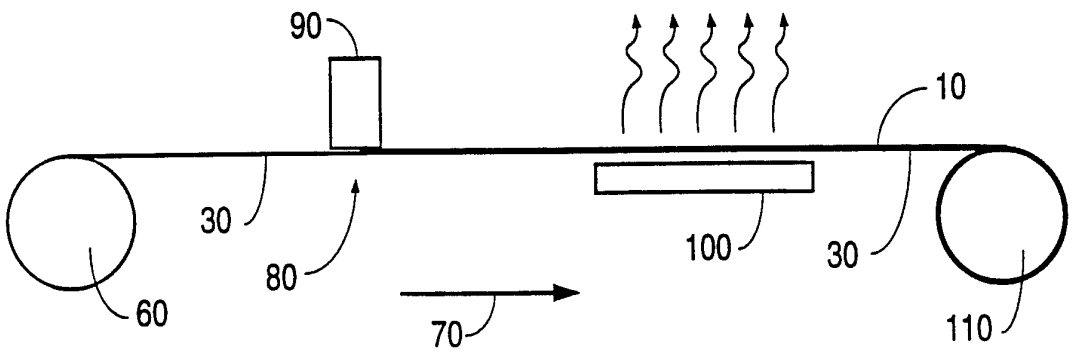

FIG. 2

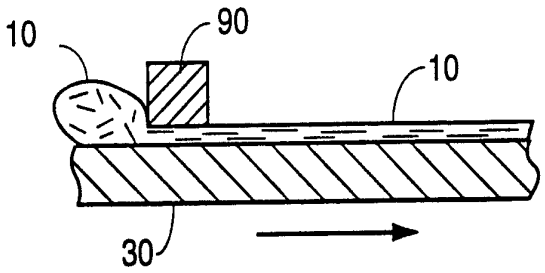

FIG. 3a

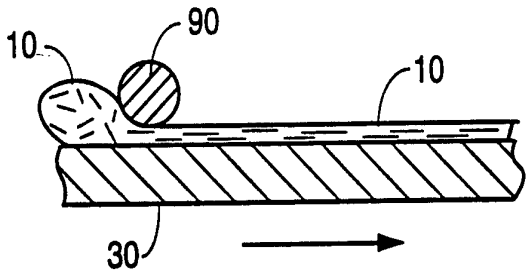

FIG. 3b

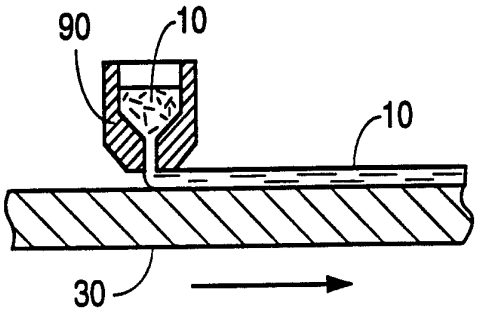

FIG. 3c

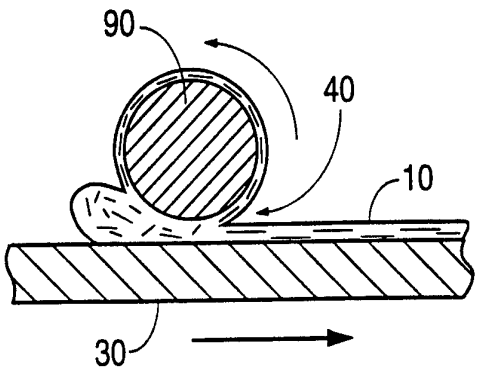

FIG. 3d

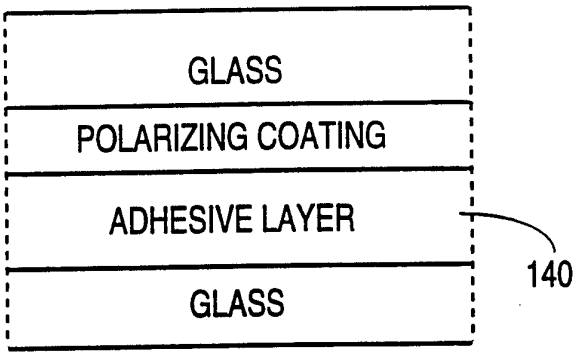
GLASS
POLARIZING COATING
ADHESIVE LAYER
140
GLASS

FIG. 4

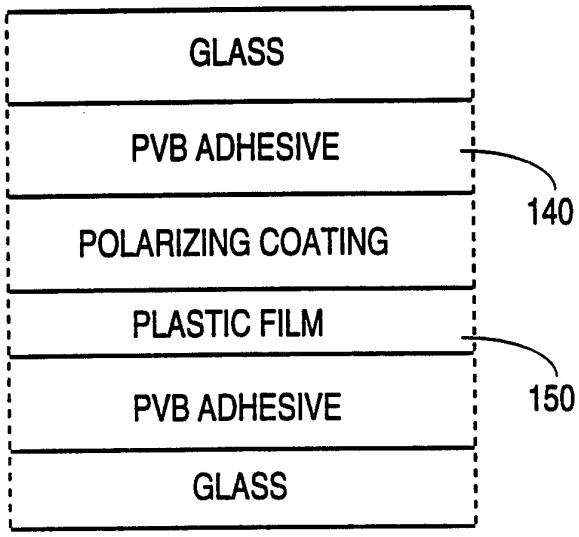
GLASS
PVB ADHESIVE
140
POLARIZING COATING
PLASTIC FILM
150
PVB ADHESIVE
GLASS

FIG. 5

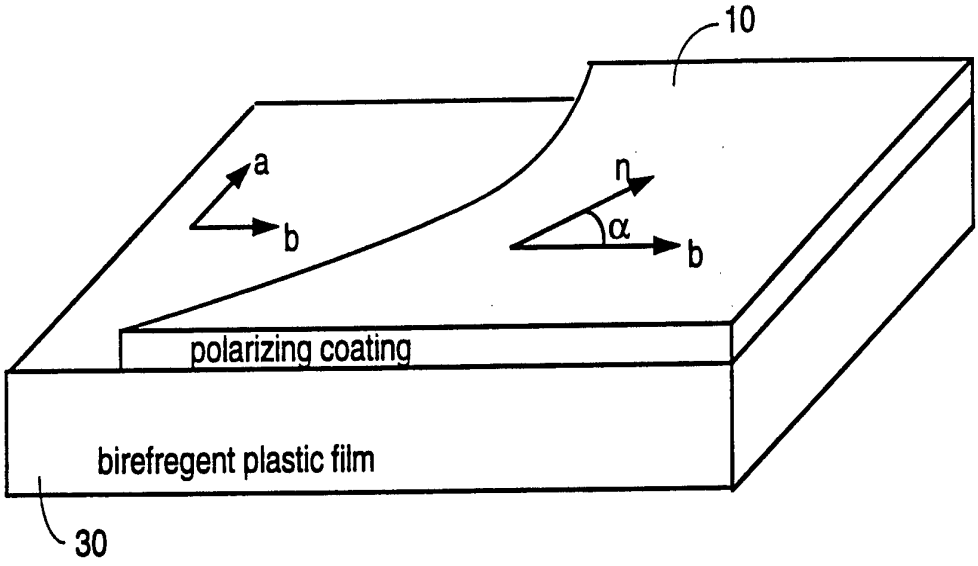

FIG. 6

INTERNATIONAL SEARCH REPORT

Inte ional application No.
PCT/US94/05493

A. CLASSIFICATION OF SUBJECT MATTER

IPC(5) :Please See Extra Sheet.
US CL :534/577, 755, 805; 549/54; 546/49, 37; 544/339
According to International Patent Classification (IPC) or to both national classification and IPC

B. FIELDS SEARCHED

Minimum documentation searched (classification system followed by classification symbols)

U.S. : 534/577, 755, 805; 549/54; 546/49, 37; 544/339

Documentation searched other than minimum documentation to the extent that such documents are included in the fields searched

CHEMICAL ABSTRACTS

Electronic data base consulted during the international search (name of data base and, where practicable, search terms used)

C. DOCUMENTS CONSIDERED TO BE RELEVANT

Category*	Citation of document, with indication, where appropriate, of the relevant passages	Relevant to claim No.
A	US, A, 1,963,383 (ROGERS) 17 June 1934, see entire document.	1-19
A	US, A, 2,005,041 (KRAUSS et al) 18 June 1935, see entire document.	1, 12
A	US, A, 2,396,582 (LECHER et al) 12 March 1946, see entire document	1-6
A	US, A, 2,403,226 (LECHER et al) 02 July 1946, see entire document.	1-19
A	US, A, 2,766,244 (BROUILLARD) 09 October 1956, see entire document.	1-19
A	US, A, 2,774,761 (HARDY) 18 December 1956, see entire document.	1-19

[X] Further documents are listed in the continuation of Box C. [ ] See patent family annex.

*	Special categories of cited documents:	"T"	later document published after the international filing date or priority date and not in conflict with the application but cited to understand the principle or theory underlying the invention
"A"	document defining the general state of the art which is not considered to be of particular relevance	"X"	document of particular relevance; the claimed invention cannot be considered novel or cannot be considered to involve an inventive step when the document is taken alone
"E"	earlier document published on or after the international filing date	"Y"	document of particular relevance; the claimed invention cannot be considered to involve an inventive step when the document is combined with one or more other such documents, such combination being obvious to a person skilled in the art
"L"	document which may throw doubts on priority claim(s) or which is cited to establish the publication date of another citation or other special reason (as specified)	"&"	document member of the same patent family
"O"	document referring to an oral disclosure, use, exhibition or other means		
"P"	document published prior to the international filing date but later than the priority date claimed		

Date of the actual completion of the international search

28 JULY 1994

Date of mailing of the international search report

AUG 25 1994

Name and mailing address of the ISA/US
Commissioner of Patents and Trademarks
Box PCT
Washington, D.C. 20231
Facsimile No. (703) 305-3230

Authorized officer

FLOYD D. HIGEL jd

Telephone No. (703) 308-1235

Form PCT/ISA/210 (second sheet)(July 1992)*

INTERNATIONAL SEARCH REPORT

Inte .onal application No.
PCT/US94/05493

C (Continuation). DOCUMENTS CONSIDERED TO BE RELEVANT

Category*	Citation of document, with indication, where appropriate, of the relevant passages	Relevant to claim No.
A	US, A, 3,171,843 (WEISSHAUER et al) 02 March 1965, see entire document.	1, 7, 8, 16, 17, 18, 19
A	US, A, 3,888,863 (TROSTER) 10 June 1975, see entire document.	1-19
A	US, A, 4,692,189 (BABLER et al) 08 September 1987, see entire document.	1-19
A	US, A, 4,780,531 (KANO et al) 25 October 1988, see entire document.	1-26
P, A	US, A, 5,248,774 (DIETZ et al) 28 September 1993, see entire document.	1-19
A	CA, A, 0,653,309 (STRAEUBLE et al) 04 December 1962, see entire document.	1-19
A	GB, A, 0,537,592 (DURAND) 27 June 1941, see entire document.	1-19
A	CH, A, 0,236,695 (FARBEN) 02 July 1945, see entire document.	1-19
A	CH, A, 0,236,696 (FARBEN) 02 July 1945, see entire document.	1-19

INTERNATIONAL SEARCH REPORT

International application No.
PCT/US94/05493

A. CLASSIFICATION OF SUBJECT MATTER:
IPC (5):

C09B 31/147, 31/30, 33/18, 35/50, 5/02, 25/00, 3/74, 57/00; C09K 19/56, 19/58, 19/30, 19/32, 19/34