(No Model.) 2 Sheets—Sheet 1.

S. J. SEYMOUR.

COMBINED FOLDING SINK AND DRIP BOARD.

No. 456,067. Patented July 14, 1891.

Fig 1.

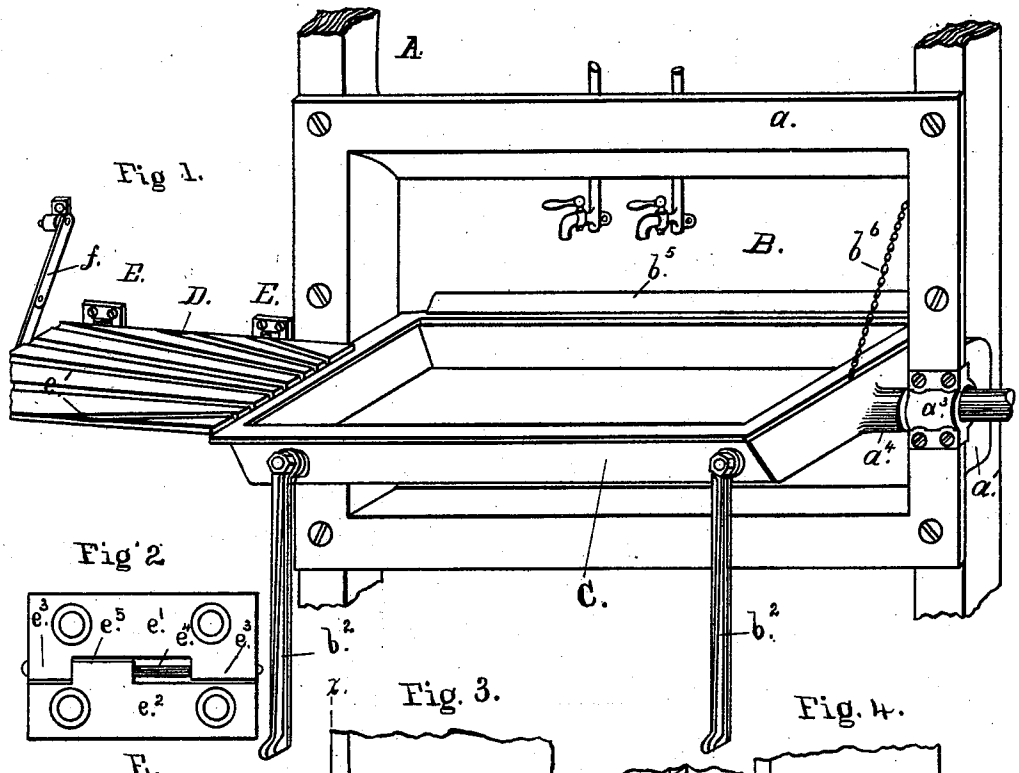

Fig 2.

E.

Fig. 3.

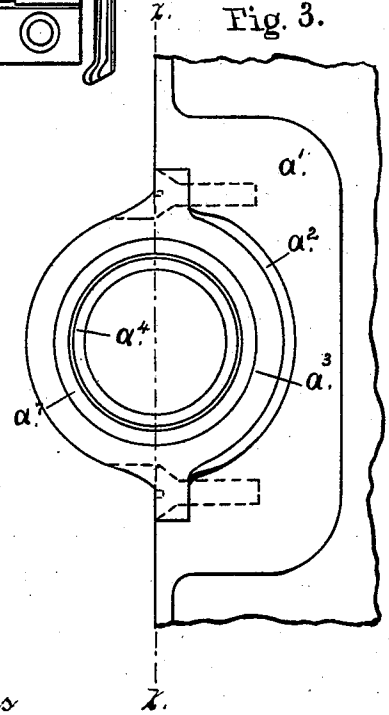

Fig. 4.

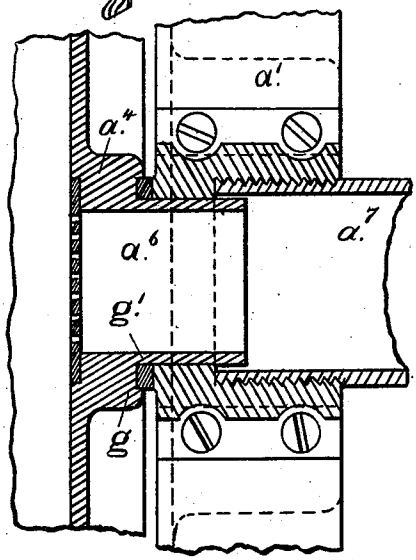

Witnesses
F. G. Dieits.
E. L. Spaulding.

Inventor
Samuel J. Seymour.
By his Attorney Chas. C. Tillman.

THE NORRIS PETERS CO., PHOTO-LITHO., WASHINGTON, D. C.

(No Model.) 2 Sheets—Sheet 2.

S. J. SEYMOUR.

COMBINED FOLDING SINK AND DRIP BOARD.

No. 456,067. Patented July 14, 1891.

Fig. 6.

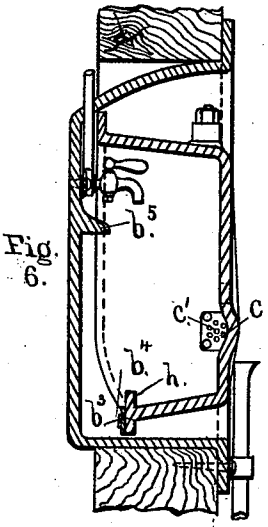

Fig. 5.

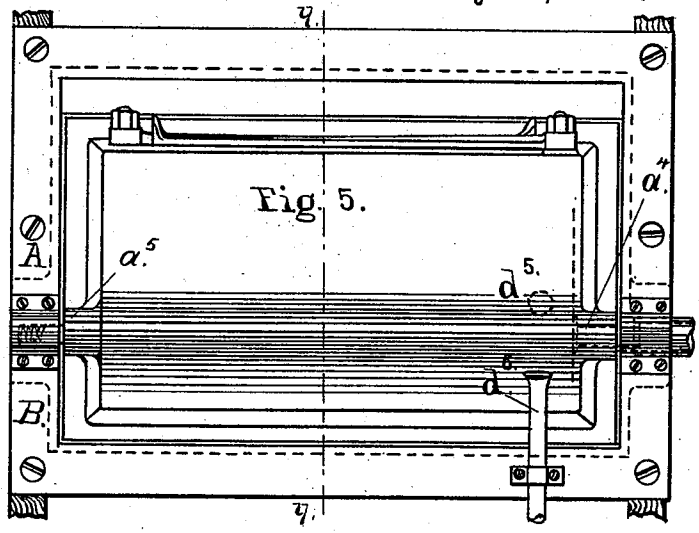

Fig. 7.

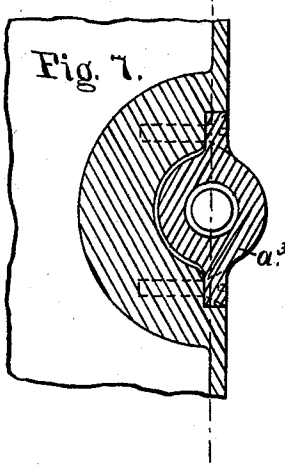

Fig. 8.

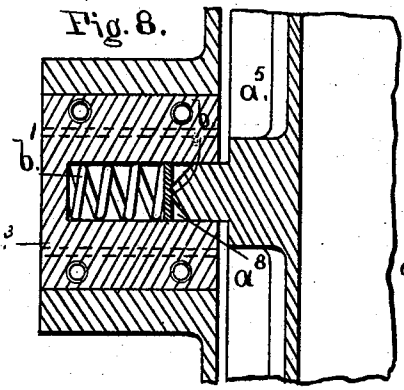

Fig. 9.

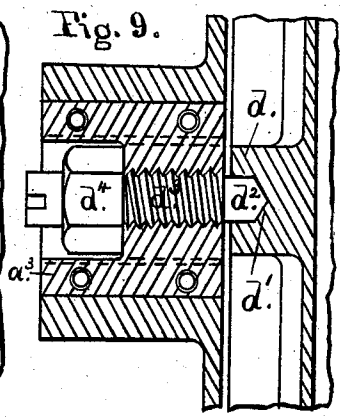

Fig. 10.

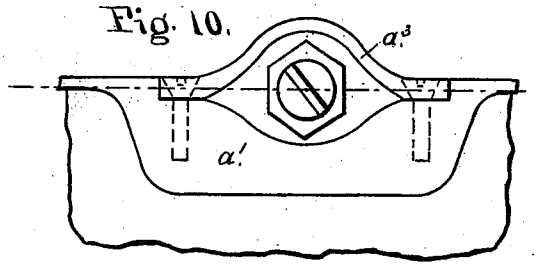

Witnesses
F. C. Wells.
E. L. Spaulding.

Inventor
Samuel J. Seymour.
By his Attorney Chas. C. Tillman.

THE NORRIS PETERS CO., PHOTO-LITHO., WASHINGTON, D. C.

UNITED STATES PATENT OFFICE.

SAMUEL J. SEYMOUR, OF CHICAGO, ILLINOIS.

COMBINED FOLDING SINK AND DRIP-BOARD.

SPECIFICATION forming part of Letters Patent No. 456,067, dated July 14, 1891.

Application filed May 16, 1890. Serial No. 352,112. (No model.)

To all whom it may concern:

Be it known that I, SAMUEL J. SEYMOUR, a citizen of the Dominion of Canada, residing at Chicago, in the county of Cook and State of Illinois, have invented certain new and useful Improvements in Combined Folding Sinks and Drip-Boards, of which the following is a specification.

My invention relates to improvements in sinks and drip-boards, and is especially adapted to that class of sinks and drip-boards which may be folded or closed into a suitable recess in the wall of the room in which they are located; and it consists in certain peculiarities of the construction and in the novel arrangement of the different parts thereof, as will be hereinafter set forth and specifically claimed.

The object of my invention is to provide a combined sink and drip-board which shall be strong, durable, and serviceable for all the purposes for which such devices may be used and when not in use may be closed or folded into and against the wall of the room, so that they will occupy little or no space therein, thus affording more space in the small room in which the sink is usually placed.

In order to enable others skilled in the art to which my invention pertains to make and use the same, I will now proceed to describe it, referring to the accompanying drawings, in which—

Figure 1 is a perspective view of my sink and drip-board secured to a portion of the wall of a room and in position ready for use. Fig. 2 is a detail view of one of the hinges used in securing the drip-board to the wall. Fig. 3 is an end view of a portion of the casing, showing the manner of securing the outlet-pipe therein. Fig. 4 is a vertical sectional view of the same, taken on line $x\ x$ of Fig. 3. Fig. 5 is a face view of the sink shown as closed and with the drip-board removed. Fig. 6 is a vertical sectional view thereof, taken on line $y\ y$. Fig. 7 is an end view of a portion of the casing, showing the bearing of the sink at the opposite end from the outlet-pipe. Fig. 8 is a vertical sectional view of the same. Fig. 9 is a modification of Figs. 7 and 8, and Fig. 10 is an end view thereof.

Similar letters refer to corresponding parts throughout the different views of the drawings.

A represents a portion of the wall of a room, to which is secured the casing of the sink and the hinges of the drip-board, and for this purpose a portion of the wall of sufficient size to admit of the rear portion of the sink-casing to be inserted is removed.

B is a hollow casing made of suitable size, form, and material, and formed around its face with a flange or flat plate a, which is provided with suitable holes for securing the casing to the surface of the wall by means of screws or otherwise. At a suitable point at each end of the casing B and at the rear of the plate or flange a is formed a boss or projection a', to which is secured the box for the bearings of the projections on the vessel C, as will be presently explained.

As shown in Figs. 1 and 3, the flange a and boss a' are formed in front with a suitable recess or depression a^2 for the reception and retention of the box a^3, which fits in said depression and is secured by screws therein.

The vessel C is made of any suitable material and of proper size and form to conform to the cavity of the casing B, into which it fits snugly when closed. At each end of the vessel C, and at a proper point for engagement with the box a^3 are provided the projections $a^4\ a^5$, the projection a^4 being formed with a hole a^6 therethrough for the escapement of the water to the drainage-pipe a^7, which is screwed into the boxing a^3 and fits around the outer end of the projection or outlet-pipe a^4, as is clearly shown in and will be readily understood by reference to Fig. 4 of the drawings. The projection a^5 is formed at the opposite end of the vessel C from the projection a^4, and is made with a pointed end a^8, which rests against a disk or flat plate b, which is firmly pressed against the point a^8 by a suitable spring b', usually spiral in form, which nests in the bearing of the box a^3, as shown at Fig. 8. To the outer front portion of the vessel C, I pivotally secure one or more legs b^2 of sufficient length to reach the floor when the vessel is being used, and is in the position shown in Fig. 1, which legs form a support for the front end of the vessel, as is ob-

vious, and may be folded to the position shown in Fig. 5 when not in use or when the sink is closed. To the upper rear portion of the rim of the vessel is secured by means of rivets b^3 or otherwise a rubber strip b^4 or similar piece of material, which rests closely against the bottom of the projection b^5, which extends horizontally across the inner surface of the back of the casing when the vessel is being used and prevents any leakage at this point. As will be readily understood, this projection b^5 also forms a support for the vessel when it is lowered, as is seen in Fig. 1, and it is obvious that I may dispense with the use of the legs or chains b^6, which may be secured to each end of the vessel and to the back of the casing on the inside thereof.

It will be seen by reference to Fig. 6 that the bottom of the vessel C is formed with a gutter or groove c, which conveys the water to the opening a^6 in the projection or outlet-pipe a^4, the mouth of which opening is covered with a suitable strainer c', which prevents anything except the water from passing out of the pipe.

In Figs. 9 and 10 I have shown a modification of the manner of pivotally securing the end or ends of the vessel to the casing which I may sometimes use instead of that shown in Figs. 7 and 8 and above described; but I prefer to use the construction first set forth. In this instance the end of the vessel is formed with a projection d, the outer end of which is provided with a socket d', into which fits the pointed end d^2 of a screw-bolt d^3, which engages with a suitable nut d^4 within the box a^3, as is apparent in Fig. 9. While I prefer to form the vessel with the outlet at the end, as shown in Fig. 1, yet I may sometimes form it with an opening in the bottom, as shown by dotted lines in Fig. 5, as at d^5, which will rest upon and connect with the open top of a waste-pipe d^6 when the vessel is in position for use.

In Fig. 1 I have shown a drip-board D, made of suitable size and material, and provided on its upper surface with a number of grooves e, converging at the middle of the end of the board adjacent to the vessel, thus draining the waste water into the vessel. These grooves are preferably made deeper at this end, which form gives a slight incline down which the water may flow. As shown, the board is secured to the wall by means of one or more sliding hinges E, which hinges are made in two pieces e' e^2, the piece e' being formed at its lower edge near each end with a projecting tube e^3, into which is inserted and retained a rod e^4, and the piece e^2 is formed with a similar tube e^5 near its center and upper edge, which loosely clasps the rod and may slide thereon, thus permitting the end of the board to rest upon the end of the vessel, as shown, and when not in use to be slid therefrom and folded to the wall either by raising or lowering the same. In order to form a support for the outer end of the board, I may secure thereto a rod f, with an elbow-joint at its middle and secured at one end to the wall and at the other end to the board; or I may use an ordinary chain attached in a like manner.

It will be seen in Fig. 4 that the projection a^4 is formed with a shoulder g and that the extended portion thereof fits into the end of the pipe a^7 and has its bearing in the boxing a^3, thus serving the double purpose of an outlet as well as an axis upon which the vessel may turn. To prevent leakage at this connection, I place a rubber or similar collar g' around the extended portion and between the end of pipe a^7 and the shoulder g, which shoulder is kept in close contact therewith by reason of the spring or screw pressure at the other end. As this collar may become worn from use or may shrink and allow leakage unless continually pressed closely by the shoulder g, I prefer to use the spring-pressed axis at the other end of the vessel; but of course by tightening the screw d^3 occasionally the same result would be obtained, but not automatically, as with the spring.

In Fig. 6 it will be seen that I form the rear edge of the vessel with an inwardly-extending flange h, which forms a receptacle for any water that might remain in the vessel when folded to the position shown in said figure.

While my invention is designed more especially for sinks, yet I do not desire to limit myself to the same, as I may apply it to wash-basins and for analogous purposes.

Having thus fully described my invention, what I claim as new, and desire to secure by Letters Patent, is—

1. In a combined folding sink and drip-board, the combination of the hollow casing B, secured to or within the supporting-surface A and having on its face the flange a and at each end the bosses a', depressions a^2, and boxes a^3 within the depressions and the rest b^5 at the rear of the cavity, with the vessel C, having the projections a^4 a^5 at its ends and forming axes for the vessel, the projection a^4, having the hole a^6, shoulder g, and collar g' and fitting into the pipe a^7, the projection a^5, having the pointed end a^8, the spring b' within the box a^3, and the spring-pressed plate b, resting against the point a^8, the drip-board D, adapted to rest on the edge of the vessel and having the adjustable hinge E and means for support, all constructed, arranged, and operating substantially as shown and described, and for the purpose set forth.

2. In a combined folding sink and drip-board, the combination of the hollow casing B, secured to the supporting-surface A and having on its face the flange a and at each end the bosses a', depressions a^2, and boxes a^3 within the depressions, and the rest b^5 at the rear of the cavity, with the vessel C, having the gutter c in its bottom and strip b^4 on its rear upper portion, the projections a^4 a^5 at its ends and forming axes for the vessel, the projection a^4, having the hole a^6, shoulder

g, collar g', and fitting in the pipe a^7, the projection a^5 having the pointed end a^8, the spring b' within the box a^3, and the spring-pressed plate b, resting against the point a^8, the drip-board D, adapted to rest on the edge of the vessel and having the hinges E, having the pieces e e', tubes e^3 e^5, and rods $e^4 f$, the rod f having a joint at its middle, all constructed, arranged, and operating substantially as shown and described.

3. In a folding sink, the combination of the hollow casing B, secured to the supporting-surface A and having on its face the flange a and at each end the bosses a', depressions a^2, and boxes a^3 within the depressions, and the rest b^5 at the rear of the cavity, with the vessel C, having the gutter c in its bottom and strip b^4 on its rear upper portion, the projections a^4 a^5 at its ends and forming axes for the vessel, the projection a^4 having the opening a^6, shoulder g, collar g', and connecting with the pipe a^7, the projection a^5 having its bearing in the box a^3, and means for a lateral pressure against the end of the projection, all constructed, arranged, and operating substantially as shown and described, and for the purpose set forth.

In witness whereof I have hereunto set my hand and affixed my seal this 14th day of May, 1890.

SAMUEL J. SEYMOUR. [L. S.]

In presence of—

FRANK L. HARTWELL,

CHAS. C. TILLMAN.