May 24, 1927. 1,630,019

F. P. LEONARD

SHINGLES AND ROOFING

Filed Dec. 5, 1925

Fig. 1.

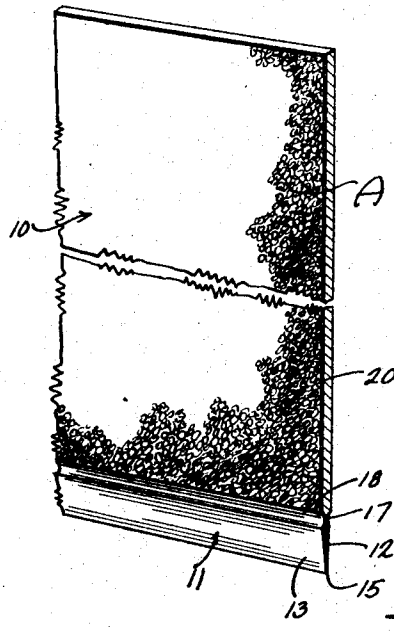

Fig. 2.

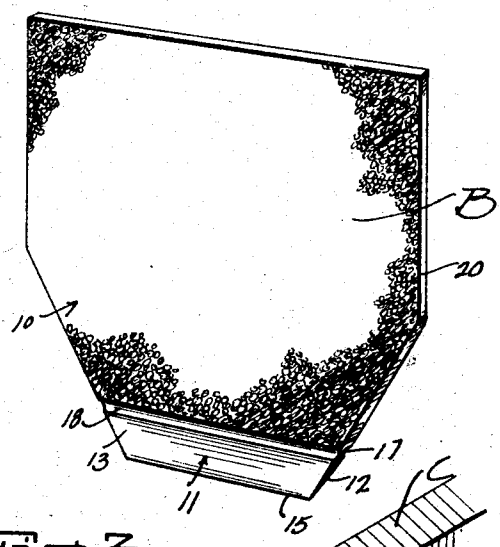

Fig. 3.

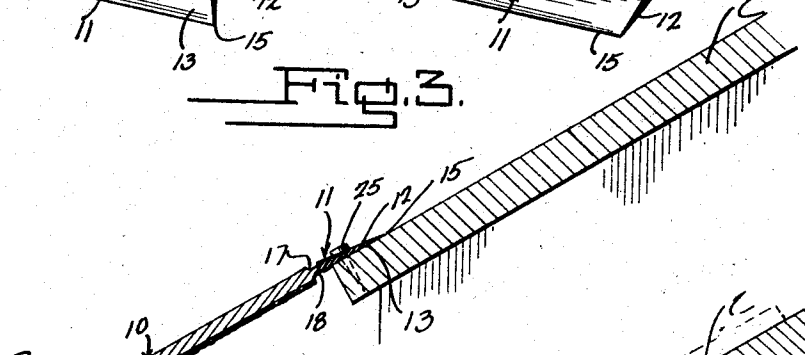

Fig. 4.

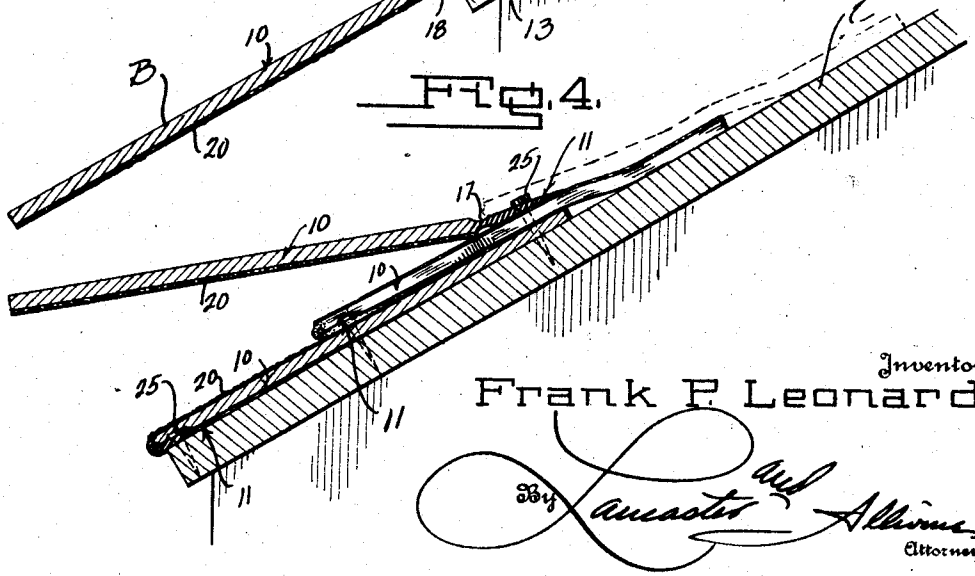

Inventor

Frank P. Leonard

By Lancaster and Allwine

Attorneys

Patented May 24, 1927. 1,630,019

UNITED STATES PATENT OFFICE.

FRANK P. LEONARD, OF TROY, NEW YORK.

SHINGLES AND ROOFING.

Application filed December 5, 1925. Serial No. 73,410.

This invention relates to improvements in roofing, and has particular reference to improvements in means for attaching roll or shingle roofing to a roof in a novel manner to prevent warping, buckling, and to provide an efficient water seal for the roof.

The primary object of the invention is the provision of roof covering, either of the roll or shingle type, including a novel attaching strip formed in such relation to the body of the roof covering that the workmen may with facility attach the roof covering securely to a roof, in a compact relation at the lower edge of the covering, to prevent its being lifted incident to numerous climatic and temperature variations, and to insure that the roof covering will lie flat at all times on the roof, and provide an efficient leak-proof seal therefor.

A further object of the invention is the provision of roof covering either of the roll or shingle type having an improved type of nailing or attaching strip formed on the body portion thereof, in a novel manner and relation.

Other objects and advantages of this invention will be apparent during the course of the following detailed description.

In the accompanying drawing, forming a part of this specification, and wherein similar reference characters designate corresponding parts throughout the several views:

Figure 1 is a fragmentary perspective view of the improved roof covering, of the roll type.

Figure 2 is a perspective view of the improved roof covering, showing the novel feature thereof adapted to be single shingle type.

Figure 3 is a view illustrating the preliminary manner in which the workman attaches the shingle to the roof.

Figure 4 is a sectional view showing the relation in which the various rows of independent shingles of roof covering are applied in novel affixed relation on a roof.

In the drawing, wherein for the purpose of illustration is shown only a preferred embodiment of the invention, the letters A and B may generally designate roll or shingle types of the roofing, both of which are adaptable for application in the same novel manner upon a roof C. The shingle type of roofing embodying the novel principle may be made in individual or multiple shingles, and the roll type of roofing may be of any width or length desirable according to the needs to be met.

Both the roll and shingle type of roof covering are constructed in the same novel manner, and each includes a body portion 10, of felt or other somewhat yieldable non-metallic material, although the novel principle of the invention is susceptible of use with metallic roofing, but is particularly well adapted for felt or composition material, in order to make the same practical and economically adaptable.

Integral with the body portion 10 is an attaching or nailing strip 11, of the same material as the body 10. The felt comprising the roof covering is taken from the hot asphalt bath, and while still hot the attaching or nailing strip 11 is rolled and compressed entirely along the lower edge of the shingle A or B, as the case may be, in a tapering converging relation at the opposite sides 12 and 13 thereof from the body portion 10, and preferably terminates at a somewhat chisel edge 15. The attaching strip 11 is of uniform width throughout the length of the lower edge of the shingle or roof covering, and at the same time as the strip 11 is compressed in its tapered condition, at the juncture thereof with the body 10, the shingle at opposite sides has preferably straight grooves 17 and 18 formed therein, by rolling, directly opposite each other at the opposite sides of the shingle, to reduce the thickness of the shingle or roof covering at the juncture of the body 10 and strip 11, to provide what may be conveniently termed a hinge joint, and enable the attaching or nailing strip to be bent in either direction at either side of the body 10, without causing a breaking or cracking of the shingle or roof covering at the juncture of the body and nailing or attaching strip. While the forming of the nailing or attaching strip 11 is as above mentioned preferably accomplished by compression of the material, the same may be cut to tapered form, or otherwise formed, but compression thereof renders the same very durable, and the fact that the rolling of the nailing or tapered attaching strip to form is accomplished while the material of the roof covering is still hot from its impregnating asphalt bath, insures that its parts will retain the form given them, and due to the somewhat flexibility of the reduced joint at the

grooves 17 and 18, the body 10 may be bent relative to the attaching strip 11 or vice versa, without cracking or straining of parts. The importance of rolling the groove and the compression of the attaching strip while the covering is hot should not be underestimated, since there will then be no tendency for the roof covering to curl or buckle incident to heat of the sun and other temperature variations. This step in the formation of the roof covering also renders the same very durable.

The shingle type of roof covering may be made in any shape, hexagonal, diamond, square, etc., and its is to be noted that all of the roof covering, of either the roll or shingle type, is provided with the attaching strip entirely along the lower edge thereof, and in the formation of the roof covering this attaching strip is located in the same plane as the body 10, and the workmen incident to application on the roof C overturns the body upon the attaching strip.

It is preferred that the body 10 of the roofing A or B have a slate, pebble, or other wear and weather resisting coating 20 thereon, and this coating extends entirely over the top surface of the body 10, but only extends to the joint formed by the grooves 17 and 18, and no part of this wear resisting coating 20 extends onto any part of the attaching strip.

Referring to the application of the roofing A or B on the roof C, the operator first places the reduced and tapered attaching strip 11 on the edge of the roofing as illustrated in Figure 2, and nails or otherwise secures this attaching strip at 25 to the roof. The roofer then bends the body portion 10 of the roof covering upwardly along the hinge joint formed by the reduced portion at the grooves 17 and 18, to the position illustrated in Figure 4, so that the body 10 overlies the reduced attaching strip 11, and the body 10 is then suitably attached to the roof C in any approved manner to hold this position. It is to be particularly noted from Figure 4 that with this construction the body 10 may be readily bent exactly at the point desired, and at the overlying portion of the body 10 upon the attaching strip 11 there is no unsightly bulge or cumbersome positioning of parts, incident to the reduced and durably compressed attaching portion 11. It is to be particularly noted that the grooves 17 and 18 form definite lines along the edge of the roofing, which facilitates the accurate laying of the roof covering upon the roof, without guides, if desired. Successive layers of the roof covering A or B are then placed on the roof C in the relation illustrated in Figure 4, the attaching strip 11 of the roofing material always being first secured to the roof and then the body portion 10 bent over into the relation illustrated in the drawings.

It is contemplated that the reduced grooves at the juncture of the attaching portion and the body of the shingle may be made on roofing material independent of the tapered or reduced formation of the attaching strip, and vice versa the attaching strip in its specific formation may be made without the specific groove structure joint between itself and the body of the shingle. However, for the most practical and efficient use these novel features are used in combination on a shingle.

Various changes in the shape, size, arrangement of parts and method of forming the shingles may be made to the invention as herein illustrated and described, without departing from the spirit of the invention or the scope of the claims.

I claim:

1. As an article of manufacture roof covering comprising integral body and attaching portions of flexible material having directly opposed grooves at opposite sides thereof extending along the juncture of the attaching and body portions to provide a reduced hinge joint thereat.

2. As an article of manufacture roof covering comprising a body portion, a reduced integral attaching strip along an edge thereof, said covering at the juncture of the strip and body portion being grooved to provide a hinge joint.

3. As an article of manufacture roof covering comprising a body portion, a reduced integral attaching strip along an edge thereof, said covering at the juncture of the strip and body portion having straight grooves at opposite sides thereof to facilitate relative location of the attaching strip to either side of the body portion.

4. As an article of manufacture roof covering comprising a body portion and an integral attaching strip along an edge thereof, said body portion having a wear resisting coating extending up to the attaching strip and the latter being free of such coating, the juncture of the attaching strip and body portion being reduced to less thickness than the body portion or strip to provide a hinge joint for relative swinging of the attaching strip and body portion.

5. As an article of manufacture roof covering comprising a body portion and an integral attaching strip along an edge thereof, said body portion having a wear resisting coating extending up to the attaching strip and the latter being free of such coating, the juncture of the attaching strip and body portion being reduced to provide a hinge joint for relative swinging of the attaching strip and body portion, said attaching portion being reduced with respect to the body portion.

6. As an article of manufacture roof covering comprising a body portion and an at-

taching strip formed along an edge thereof of tapered formation diminishing in thickness from the juncture of the body portion towards the free edge thereof, said covering at the juncture of the attaching strip and body portion being transversely reduced and of less thickness than the adjacent body portion and strip to provide a hinge joint.

7. As an article of manufacture roof covering comprising a body portion and an attaching strip formed along an edge thereof of tapered formation diminishing in thickness from the juncture of the body portion towards the free edge thereof, said covering at the juncture of the attaching strip and body portion being transversely reduced by grooving the body inwardly of a side thereof to provide a hinge joint.

8. As an article of manufacture roof covering comprising a body portion and an attaching strip formed along an edge thereof of tapered formation diminishing in thickness from the juncture of the body portion towards the free edge thereof, said covering at the juncture of the attaching strip and body portion being transversely reduced by grooving the body inwardly of opposite sides thereof to provide a hinge joint.

FRANK P. LEONARD.