July 7, 1970 A. KONRAD ET AL 3,519,214

APPARATUS FOR ROLLING FABRIC BANDAGES

Filed Nov. 25, 1968 2 Sheets-Sheet 1

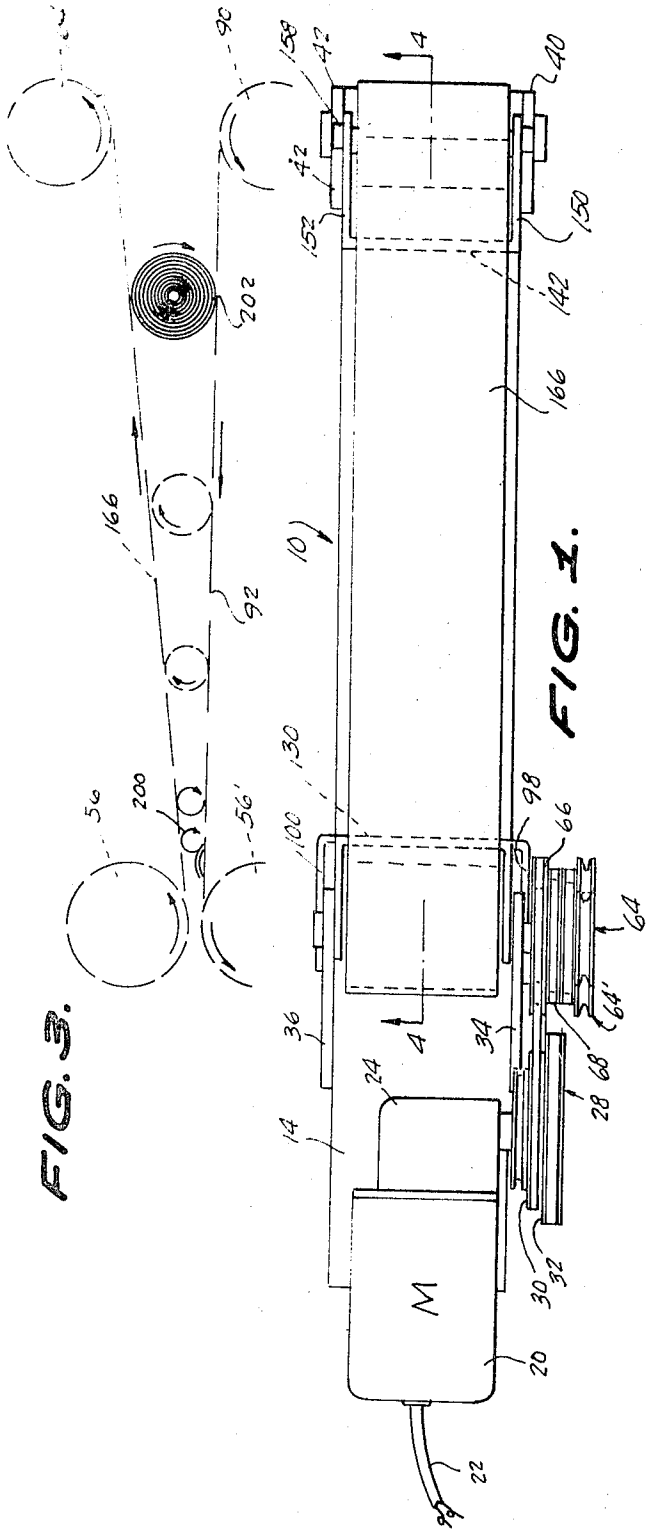

FIG. 1.

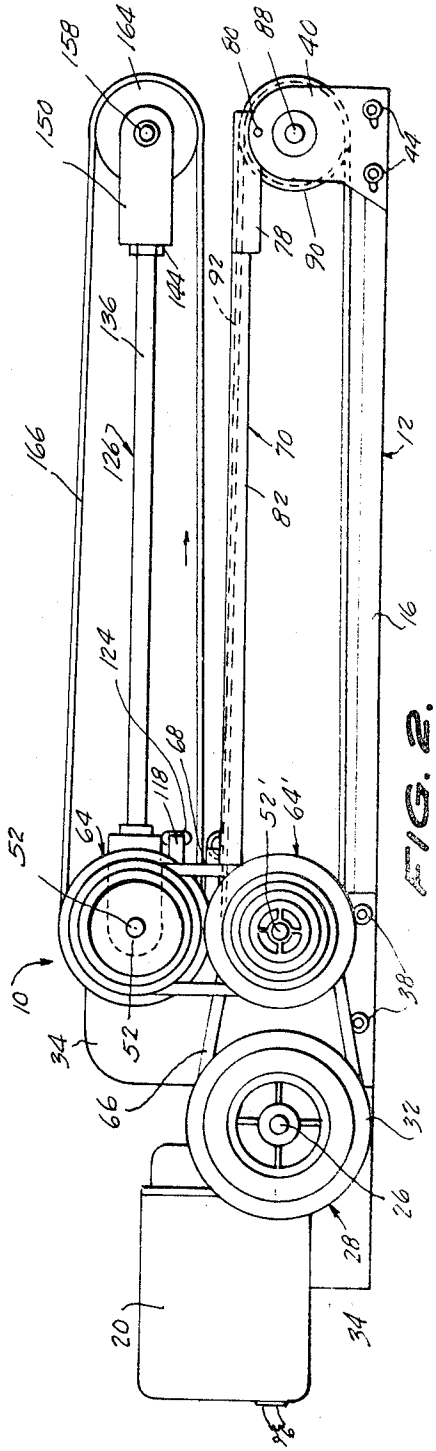

FIG. 2.

FIG. 3.

INVENTORS.
LESTER E. HAWKINS,
ALEXANDER KONRAD,
BY
Kenyon Crowell & Weaver

APPARATUS FOR ROLLING FABRIC BANDAGES

Filed Nov. 25, 1968 2 Sheets-Sheet 2

FIG. 6.

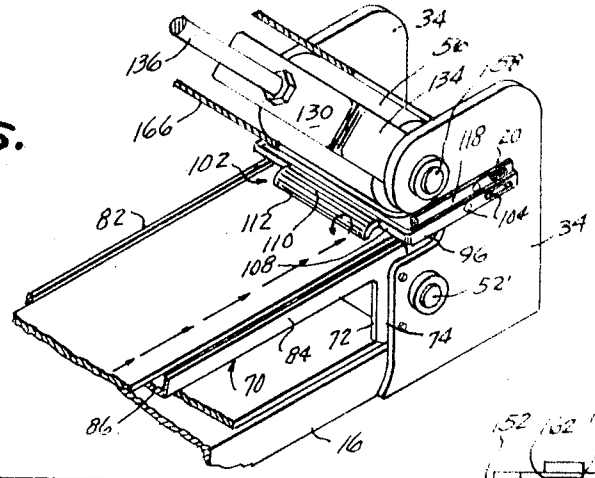

FIG. 5.

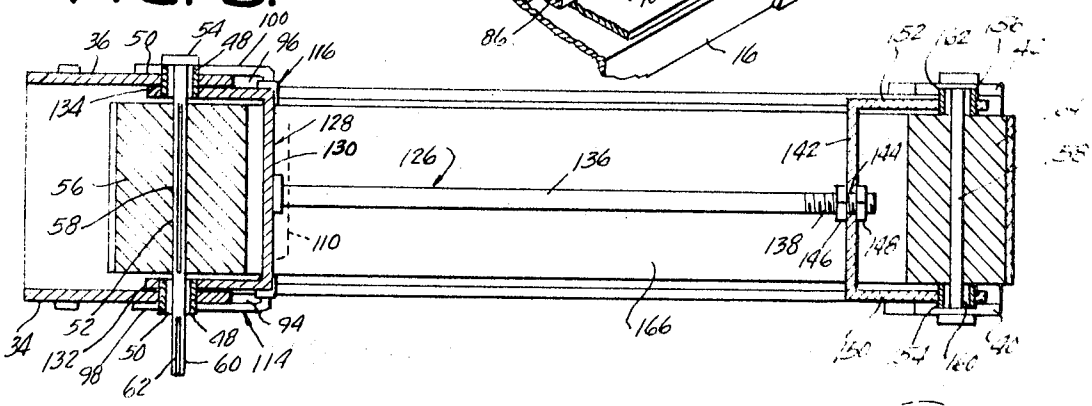

FIG. 4.

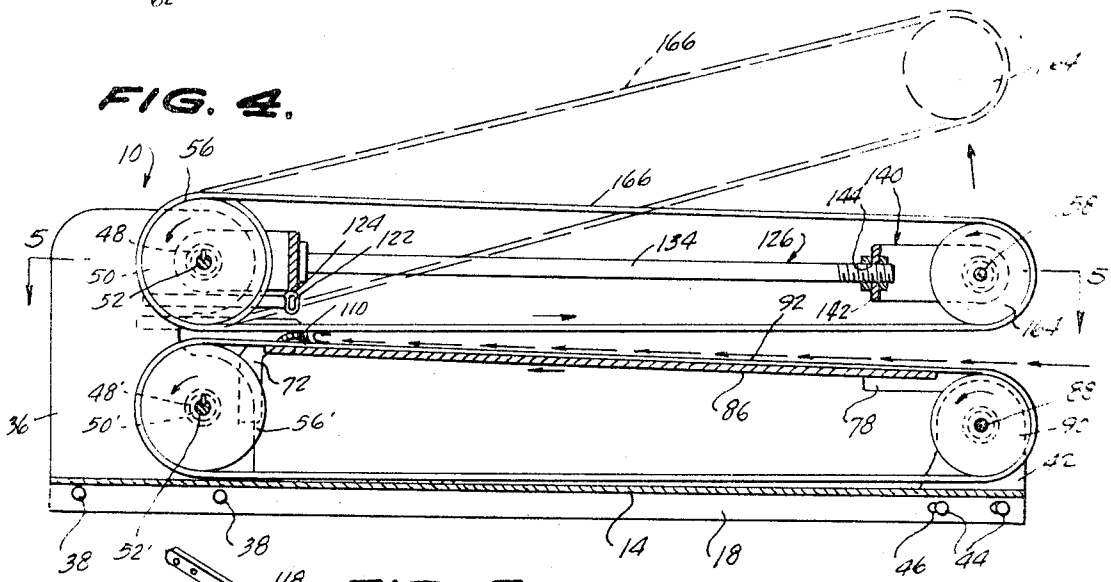

FIG. 7.

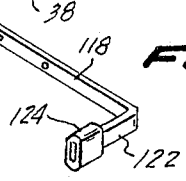

INVENTORS.
LESTER E. HAWKINS,
ALEXANDER KONRAD,
BY
Kimmel, Crowell & Weaver
ATTORNEYS.

United States Patent Office

3,519,214

Patented July 7, 1970

1

3,519,214
APPARATUS FOR ROLLING FABRIC BANDAGES

Alexander Konrad, Parma Heights, and Lester E. Hawkins, Cleveland, Ohio, assignors of twenty-five percent each to Lucille L. Konrad, Parma Heights, and Gloria R. Hawkins, Cleveland, Ohio

Filed Nov. 25, 1968, Ser. No. 778,569
Int. Cl. B65h *17/14*
U.S. Cl. 242—67.1 10 Claims

ABSTRACT OF THE DISCLOSURE

A machine for converting a flat length of fabric material into a roll of said material and including a base, a pair of vertically spaced and juxtaposed continuous belts supported on said base and adapted to receive the leading end of said fabric material therebetween, roll starting means on said base, means pivotally connecting one end of one of said belts to permit pivotal movement of the other end of said one belt relative to the other of said belts, and means driving said belts in contra directions and at differing speeds relative to one another.

BACKGROUND OF THE INVENTION

This invention relates to machines designed to roll flat strips of fabric material and, more specifically, the present invention pertains to a machine for rolling a flat strip of material to form what is now commonly known as an "ACE" bandage.

An "ACE" bandage in its basic form is generally sold over the counter in drugstores, department stores, sporting goods stores, and through other retail outlets and is generally supplied to the purchaser in its rolled configuration. Such bandages are manufactured of a fibrous material which is relatively flexible, and, to some extent, is resilient. Such bandages are generally used to wrap injured limbs of patients and are, conventionally, about four inches wide and from four to ten feet long.

Prior to this invention, "Ace" and other related types of bandages have been hand rolled. Such work is tedious and suffers other drawbacks such as, for example, the lack of uniformity in the length of one belt with respect to the lengths of other belts since in manually winding the fabric bandage strip the bandage roller rolls the bandages with more or less tension on the bandage as the diameter of the rolled bandage increases. Of course, such strips of fabric bandage could be precut into predetermined lengths to preclude any lack of uniformity in the length of the bandage, but such precut lengths, especially if the same approached a length of ten feet, are difficult to handle and therefore increases the costs of production.

It is, therefore, one of the primary objects of this invention to provide a mechanically operated machine for rolling an "Ace" type bandage to any given diameter and of any predetermined length.

It is another object of this invention to provide a machine for rolling bandages of the "Ace" type expeditiously and with but the minimum expenditure of time by an attendant.

This invention contemplates, as a still further object thereof, the provision of a bandage rolling machine which is non-complex in construction and assembly, inexpensive to manufacture and maintain, and which is rugged and durable in use.

Other and further objects and advantages of the instant invention will become more manifest from a consideration of the following specification when read in the light of the annexed drawings.

In the drawings:

2

FIG. 1 is a top plan view of a bandage rolling machine constructed in accordance with this invention;

FIG. 2 is a side elevational view of the machine shown in FIG. 1;

FIG. 3 is a schematic view illustrating the start of the rolling operation and illustrating in successive steps the increasing diameter of the bandage roll as the same approaches the discharge end of the device or machine;

FIG. 4 is a fragmentary detail side elevational view, partly in cross-section, FIG. 4 being taken substantially on the vertical plane of line 4—4 of FIG. 1, looking in the direction of the arrows;

FIG. 5 is a partial medial transverse cross-sectional view, FIG. 5 being taken substantially on the vertical plane of line 5—5 of FIG. 4, looking in the direction of the arrows;

FIG. 6 is a fragmentary perspective view, partly in cross-section, and illustrating the components of the machine at the pivotal end thereof; and

FIG. 7 is a perspective view of the stop or abutment means utilized in limiting the pivotal movement of the upper belt towards its associated lower belt.

Referring now more specifically to the drawings, reference numeral **10** designates, in general, a bandage rolling device or machine constructed in accordance with the teachings of this invention. As is illustrated in the several figures of the drawings, the machine **10** includes an elongated substantially rectangular channel-shaped base member **12** having a centrally located substantially rectangular web **14** from the longitudinally extending marginal edges of which depend the lateral flanges **16, 18.**

Fixedly secured by conventional means (not shown) on one end of the web **14** (at the left-hand side of the machine as viewed in FIGS. 1 and 2) is a conventional electrically energizable motor **20** connected to a suitable source of electrical power through the cable **22.** The drive shaft (not shown) of the motor is operatively connected with the input side of a conventional speed reducer unit **24** having an output shaft **26** on which is mounted a driving pulley **28,** and the latter includes a pair of pulley wheels **30, 32** of different diameters to provide a change of driving speeds.

Spaced inwardly from the speed reducer **24** is a pair of substantially upright rectangular standards **34, 36,** the standards **34, 36** having their respective lower ends fixedly connected by conventional fastening means **38** to the opposed sidewalls **16, 18,** respectively. A second pair of standards **40, 42** is provided, the last named standards being secured by conventional fastening means **44** on those ends of the sidewalls **16, 18** remotely disposed from the fastening means **38.** As is clearly seen in FIGS. 2 and 4, the fastening means **44** are received in normally horizontally elongated slots **46** and comprise in cooperation therewith conventional belt tightening or take-up means.

The standards **34, 36** adjacent their upper ends, are provided with coaxially aligned journals **48, 48,** respectively, and each of the journals **48, 48** rotatably receives therein bushings **50, 50,** the latter being fixedly connected on a shaft **52** having an enlarged head **54** at one of its ends which normally bears against an end of the adjacent journal **48.** Mounted on the shaft **52** is an enlarged cylindrical roller (see FIG. 5), and the roller **56** is connected on the shaft **52** as by means of the axially extending spline **58.** As is seen in FIG. 5, the roller **56** is disposed between the standards **34, 36,** and the shaft **52** is of such length as to provide an extension **60** splined at **62.** The extension **60** of the shaft **58** is spline connected to a compound or multiple speed pulley here generally designated by the reference numeral **64** (see FIGS. 1 and 3).

The standards **34, 36** also receive and support for rotation a second shaft thereon, the shaft and bearing means being identical to those described above and carrying prime marks for the purpose of differentiation. The shaft **52'**, it should be noted, extends parallel to the shaft **52** in vertically spaced relationship relative thereto, and the shaft **52'** supports the cylindrical roller **56'** for rotation therewith, the two rollers **56, 56'** being substantially of the same diameter.

An endless belt **66** is trained around the pulley wheels **30** and **66** of the compound pulleys **28, 64**, respectively, to establish a driving relationship therebetween. An endless belt **68** connects the compound pulley **64'** in driving relationship with the compound pulley **64**.

A substantially U-shaped elongated channel member **70** has integrally formed depending legs **72** at the opposed sides thereof, the legs **72** being fixedly connected by conventional fastening means **74** to the standards **34, 36**. The channel member **70** is also provided with integrally formed downwardly depending lips **78** at each side thereof, the lips being fixedly connected by conventional fastening means **80** to the adjacent one of the standards **40, 42**. The channel-shaped member **70** also includes a pair of longitudinally extending sidewalls **82, 84** disposed in parallel relationship relative to one another. The channel-shaped member **70** also includes a bight portion **86** to which further reference will be made below.

The standards **40, 42** support therebetween an elongated shaft **88** journalled for rotation thereon by the same means described above in connection with the support of the shafts **52, 52'**. The shaft **88** carries a roller **90** of somewhat smaller diameter than the roller **56'**, and trained around the rollers **56', 90** and over the bight portion **86** of the channel member **70**, and between the sidewalls **82, 84** is an endless carrier belt **92**.

The standards **34, 36** are each formed with slots **94, 96**, respectively, (see FIGS. 5 and 6), and secured to the remotely disposed sides of each of the standards **34, 36** are the arms **98, 100** of a substantially U-shaped "kicker" or bandage roll starting device **102**. As is seen in FIGS. 5 and 6, the arms 98, 100 are secured to the standards **34, 36** by conventional fastening means **104**, and the inner ends thereof project across the slots **94, 96** and are integrally connected together by means of a bight member **108** on which is rigidly connected or integrally formed therewith a concave-convex element **110** with the concave side thereof facing downwardly. As is seen in the several figures of the drawings, the element **110** includes a leading edge **112** which is disposed in the path of travel of the belt **92**, the direction of the travel of the belt **92** being indicated by the arrows shown in FIG. 4 of the drawings. As is seen in FIG. 4, the element **110** is disposed in close juxtaposition relative to the belt **92** and extends transversely thereof between the sidewalls **82, 84** of the channel member **70**.

Also fixedly secured to the standards **34, 36** is abutment means **114, 116**, respectively. Each of the abutment means **114, 116** is of identical construction and includes an L-shaped member having an elongated leg portion **118** fixedly secured to its respective associated standard **34, 36** by conventional fastening means **120**, and an inwardly turned foot section **122** (see FIG. 4) which preferably receives a resilient liner **124** thereover formed of any suitable resilient material such as, for example, rubber. As is seen in the drawings, the foot sections **122** are disposed in spaced and confronting relationship relative to one another.

An elongated substantially open frame means here bears the general reference numeral **126**. The frame means **126** includes a first substantially U-shaped bracket **128** having a bight **130** from the opposed ends of which laterally project the arms **132, 134**, respectively, the arms **132, 134** being pivotally mounted for rotation about the journals **48**. Connected to the bight portion **130**, and projecting laterally away therefrom in a direction opposed to the direction of the extension of the arms **132, 134** is an elongated rod **136**. The rod **136** has one of its ends fixedly connected by conventional means to a central portion of the bight **130**, and the other end of the rod **136** is threaded as at **138**.

A second bracket **410** includes a bight portion **142** which is centrally apertured as at **144** to receive the threaded end **138** of the rod **136** therethrough, the bight portion **142** being fixedly secured in an adjusted position by means of clamp nuts **146, 148** threaded on the threaded end **138** and engaging the opposed sides of the bight portion **142** therebetween. Integral with the remotely disposed ends of the bight portion **142** are arms **150, 152** which carry journals **154, 156**.

Reference numeral **158** denotes an elongated shaft having bushings **160, 162** at the opposed ends thereof and journalled for rotation in the journals **154, 156**. Mounted on the shaft **158** between the arms **150, 152** is a cylindrical roller **164** of substantially the same diameter as the roller **90**. Trained about the rollers **56, 164** is an endless belt **166**.

As is seen n FIG. 4 of the drawings, the roller **164** is adapted to move from its full line position to its dotted line position, the pivotal movement being achieved by pivoting the frame about the axis of the shaft **52** in an upward direction. The frame **126** has its downward movement limited by the engagement of the bight portion **130** with the covered foot sections **122** of the L-shaped abutment means, **114, 116** which extend through the slot **94, 96**.

Having described the component elements of this invention in detail, the operation thereof is set forth below.

Assuming that the motor **20** has been energized, the output shaft of the speed reducer **24** will rotate causing the driving pulley **28** to turn. Rotation of the driving pulley **28** causes the compound pulley **64'** to rotate in the same direction by virtue of the driving connection therebetween achieved by the endless belt **66**. This, in turn, causes the roller **56'** to rotate in the direction of the arrow as shown in FIG. 4, and this, in turn, causes the belt **92** to move in the direction of the arrows (see FIG. 4) with the consequent rotation of the roller **90** in the direction of its arrow as shown in FIG. 4.

The endless belt **68** connects the compound pulley wheel **64'** in driving relationship with the compound pulley **64**, but through its connection with the compound pulley **64** the turning of the latter is at a greater speed than the rotation of the compound pulley **64'** whereby the cylindrical roller **56** travels at a greater rate of speed than the cylindrical roller **56'**. This causes the belt **166** to travel at a greater rate of speed than the belt **92**, and with the underside of the belt **166** traveling in a direction contra to the direction of travel of the adjacent upper side of the belt **92**. The roller **164** also turns in the same direction as the roller **64**. The adjustment of the nuts **146, 148** provides for belt take-up or tensioning as the case may be.

With the motor energized and the belts traveling in their respective indicated positions in FIGS. 2 and 4, the user need but place the leading end of a strip of fabric **200** (see FIG. 3) on the traveling belt **96** adjacent the roller **90**. As the leading end **200** of the fabric strip is carried in the direction of the roller **56'**, the same engages the leading edge **112** of the element **110** and as the same moves upwardly thereover, the leading edge **200** engages the underside of the belt **166** and is rolled over as is shown, schematically, in FIG. 3, to start the rolling of the bandage here indicated by reference numeral **202**.

As the rolling continues, the outside diameter of the rolled portion thereof gradually increases in outside diameter, and the rolled portion of the bandage **202** gradually shifts in its position relative to the bight **86** and forces the frame **126** to pivot upwardly as the rolled bandage **202** moves to the right or the discharge end of the

apparatus as viewed in FIG. 3. If the bandage **202** is formed of a strip of fabric of predetermined length, the completed bandage is actually discharged from the apparatus at the completion of the rolling operation. On the other hand, if the bandage is formed from a continuous strip of fabric material, then as the rolled bandage **202** arrives at the discharge end of the apparatus, the fabric strip may be severed.

Having described and illustrated one embodiment of this invention in detail, the inventive concept is herein defined by the appended claims.

What is claimed is:

1. Apparatus for rolling a strip of flexible fabric material into a rolled bandage and comprising:

an elongated normally horizontal base;

an elongated first endless belt having a pair of opposed ends;

means supporting said first endless belt on said base for movement relative thereto;

an elongated second endless belt having a pair of opposed ends;

means pivotally connecting one end of said second endless belt on said base with the other end thereof free to pivot towards and away from said first endless belt and to position portions of said belts in vertically spaced confronting position relative to one another to receive and roll said strip therebetween to form said rolled bandage; and

means connected in driving relationship with said one end of said second endless belt and the adjacent one end of said first endless belt.

2. Apparatus as defined in claim **1** wherein:

said confronting portions of said endless belts travel in contra-directions and at differing speeds.

3. Apparatus as defined in claim **1** wherein:

said second endless belt is positioned over said first endless belt;

said driving means driving said confronting portions of said endless belts in contra-directions; and

said driving means driving said second endless belt at a higher speed than said first endless belt.

4: Apparatus as defined in claim **3** wherein the leading edge of said strip of fabric material is imposed on the other end of said first endless belt for movement towards the first end thereof; and

means supported on said base and disposed in the path of travel of said strip adjacent said one ends of said endless belts to raise said leading end of said strip upwardly from said first endless belt into engagement said second endless belt to revert the leading edge upon itself and to initiate the rolling of said bandage.

5. Apparatus as defined in claim **4** wherein:

said supporting means for said first endless belt includes standards on each end of said base and rotatably supporting said first roller means thereon;

said first endless belt being trained around said first roller means;

an elongated frame having a pair of opposed ends;

said pivotally connecting means for said second endless belt including means for pivotally connecting one end of said frame on said standards adjacent said one of said base; and

roller means at each end of said frame around which said second endless belt is trained.

6. Apparatus as defined in claim **5** wherein:

said roller means each includes a shaft supported on the adjacent ones of said standards; and

said driving means is mounted on said base and is connected in its said driving relationship with said shafts adjacent said one ends of said endless belts.

7. Apparatus as defined in claim **6** and

an elongated U-shaped channel member mounted on said standards receiving and supporting said confronting portion of said first endless belt thereon.

8. Apparatus as defined in claim **7** wherein:

said strip raising means includes a concave-convex element, and

means connecting said element from said standards adjacent said one ends of said endless belts and in the path of travel of said strip with said concave side of said element opening towards said first endless belt.

9. Apparatus as defined in claim **8** wherein:

said supported confronting portion of said first endless belt is slidably engaged with the bight portion of said U-shaped channel member.

10. Apparatus as defined in claim **9** and

belt tightening means on said base and said frame.

References Cited

UNITED STATES PATENTS

672,215	4/1901	Lewis	242—55.1
1,490,544	4/1924	Stern	242—55.1 X
2,939,645	6/1960	Rowlands et al.	242—56
3,315,908	4/1967	Wetzler	242—67.1

GEORGE F. MAUTZ, Primary Examiner