Oct. 31, 1933. W. J. ALLMAN 1,932,501

CONVEYER TRACK

Filed May 18, 1932

Fig. 1.

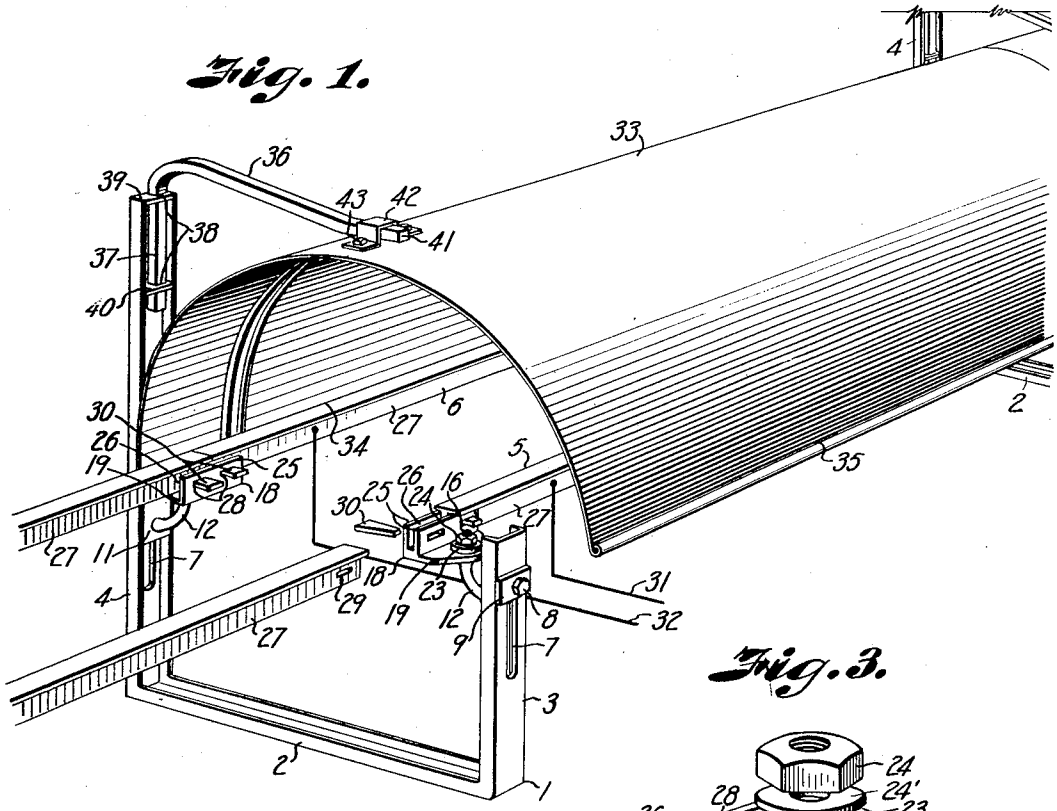

Fig. 3.

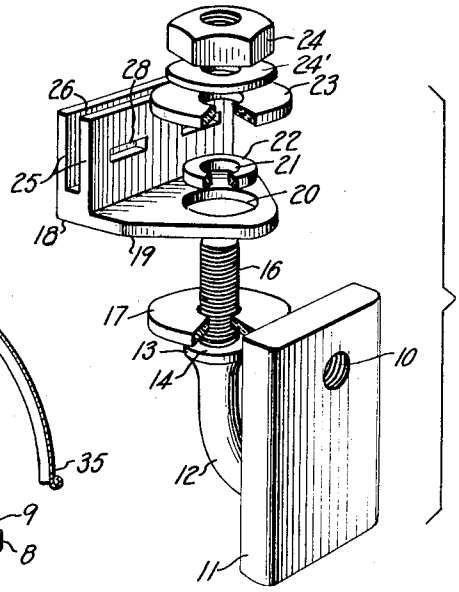

Fig. 2.

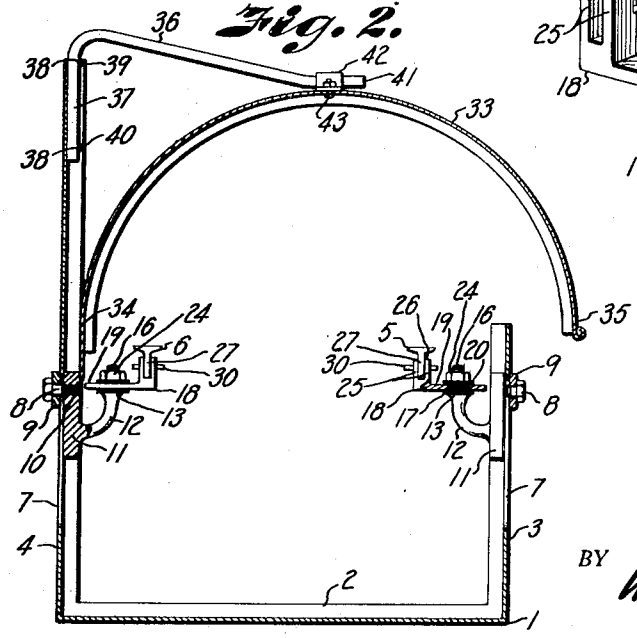

INVENTOR.

Wilsie J. Allman

BY

ATTORNEY.

Patented Oct. 31, 1933 1,932,501

UNITED STATES PATENT OFFICE

1,932,501

CONVEYER TRACK

Wilsie James Allman, Kansas City, Mo.

Application May 18, 1932. Serial No. 612,051

14 Claims. (Cl. 104—124)

My invention relates to conveyer tracks, and more particularly to one of knock-down type for shipment to and assembly at various locations, the principal object of the invention being to provide a track of such type including adjustable elements whereby the track rails may be leveled on uneven ground or at banked curves to obviate the expense of grading, and including a housing for protecting and concealing the track and a truck or carrier movable over the track.

It is a further object of the invention to provide a track of this type wherein electrically conductive rails may be mounted in adjustable insulated relation to supporting brackets and in conductive relation to each other to provide constant supply of current throughout the length of the track.

In accomplishing these and other objects of my invention, I have provided improved details of structure, the preferred form of which is illustrated in the accompanying drawing, wherein:

Fig. 1 is a perspective view of a conveyer track, supporting bracket and cover constructed in accordance with my invention, one of the rail sections and a wedge being shown in disassociated relation to the remaining members.

Fig. 2 is a cross sectional view of the apparatus particularly illustrating the manner of insulating tie members from a supporting bracket.

Fig. 3 is a perspective view of a tie member, bracket arm and insulation in disassembled relation.

Referring more in detail to the drawing:

1 designates a supporting bracket preferably formed of a single channel member having a base portion 2 and spaced standards 3 and 4, the standard 3 being approximately one half the length of the standard 4.

A series of the supporting elements are arranged in a straight or an arcuate line as desired for supporting rails 5 and 6 carried by the brackets in a manner presently described.

In order to provide for adjustable mounting of the rails on the supporting brackets to permit vertical adjustment of one rail in relation to the opposite rail, as for example to compensate for irregularities on the surface supporting the brackets, elongated slots 7 are formed in each of the standards for slidably receiving a cap screw extended through the slot and through a backing plate 9 for threaded engagement with the opening 10 of an anchor block 11.

Each anchor block conforms in cross section substantially to the groove of the channel member for snugly seating therein, and extending from the inner face of each block, and preferably formed integrally therewith, is an upwardly directed arcuate arm 12 provided with an enlarged portion 13 forming a stop shoulder 14.

The remaining upper end of the arm is reduced and externally threaded, as indicated at 16, and slidably mounted thereover is an insulating washer 17 serving as a seat for a tie member 18 having a lateral plate portion 19 provided with a relatively large opening 20.

Seated in the opening 20, and in turn provided with an aperture 21 for receiving the threaded stem of the arcuate arm, is a non-conductive washer 22 for insulating the stem from the tie member and an upper insulating disk 23, similar to the washer 17, is sleeved over the bolt, the plate portion of the tie member being clamped firmly between the insulating washers by a nut 24 threaded on the stem of the arcuate arm, and bearing against a metal washer 24', seated on the upper face of the insulating disk 23.

The joint member further includes an upwardly extending pair of parallel wings 25 producing a slot 26 therebetween for seating webs 27 of the rails 5 and 6, the wings and web portions being respectively provided with elongated openings 28 and 29 adapted to receive wedge members 30 for firmly drawing the ends of adjacent rail sections together to insure a tight joint for positively conducting an electrical current, led to the rails by feed wires indicated at 31 and 32.

In order to protect the rails and joint members from weather elements, a cover 33 is provided of sheet metal, or the like, preferably shaped arcuately as shown so that one edge 34 bears against the standards 4 and its opposite edge 35 is spaced from and overhangs the shorter standards 3.

The cover may be supported in this position by arms 36 having depending ends 37 inserted in openings 38 of cross plates 39 and 40 welded or otherwise secured in the channels of the supporting brackets, and having outer ends 41 engaging saddles 42 preferably secured by bolts 43 to the cover on a median line thereof.

Assuming a conveyer apparatus to be constructed as described, the members may be readily assembled as follows:

The supporting brackets are arranged in either a straight or curved series as desired and are spaced according to the weight to be carried thereon as will be obvious. The anchor blocks having supporting arms non-conductively secured to the tie members are then clamped in the channels of the supporting brackets after being adjusted to a desired height to compensate for irregulari-

ties in the ground surface or to provide the necessary incline for a curve or the like. The rail sections are next inserted in the notches of the tie members and the wedges driven into the elongated openings of the tie members and rails for quickly and securely connecting adjacent ends of the rail sections in conductive relation.

The cover may be mounted on the supporting brackets after the depending ends of the arms 36 have been extended through the cross plates of the standards, or the arms and the cover may be mounted in assembled condition on the brackets.

After the feed wires have been connected to the respective rails for leading electrical energy to the rails, the apparatus is in condition for conveying a carrier or vehicle mounted on the rails and operably connected with a motor deriving its power from current supplied thereto by the rails.

It will be apparent from the foregoing that I have provided a conveyer apparatus that can be readily assembled and disassembled, that can be adjusted to position the respective rails at the height desired, and wherein the rail sections, after being mounted in the slots of the tie members, are in firmly abutting condition for conducting current throughout the length of the rails.

What I claim and desire to secure by Letters Patent is:

1. A conveyer track including a rail support, aligning rails mounted on said support, and means cooperative with adjacent rails and with the support for forcing adjacent ends of the rails to abutting relation.

2. In a conveyer track, a rail support including a slotted tie member, rails having slotted end portions seated on the tie member, and a wedge projected through the slots of the rails and tie member for enforcing the rails to assembled conductive relation.

3. In a conveyer track, a rail support including a slotted tie member, rails having slotted end portions seated on the tie member, a wedge projected through the slots of the rails and tie member for enforcing the rails to assembled conductive relation, and means insulating the tie member from the support.

4. In a conveyer track, a supporting member including a vertical standard, an arm adjustable on the standard, a tie member on the arm, aligning rails, nd means attaching the rails to the tie member and forcing adjacent ends of the rails to abutting relation.

5. A conveyer track including a supporting member having spaced standards, track rails, rail carriers independently adjustable on the standards to effect levelling of the rails at opposite ends of the track, and means for drawing adjacent rails toward each other for connecting aligning rail members and attaching said members to the carriers.

6. A conveyer track including a supporting member having spaced vertical standards, a track rail mounted on each of the standards, an arm on one of the standards, and a track cover suspended from said arm and covering the other standard.

7. A conveyer track including a supporting member having spaced substantially vertical standards, track rails mounted on the standards, an arm on one of the standards, and a track cover suspended from said arm having a free edge overhanging and spaced from the opposite standard.

8. A conveyer track including a unitary supporting member having spaced standards, track rails mounted on the standards, an arm removably mounted on one of the standards, and a track cover suspended from said arm.

9. A conveyer track including a supporting member having spaced vertical standards and a base member connecting the standards, track rails mounted on the standards, an arm removably mounted on one of the standards, and a track cover removably suspended from said arm.

10. A conveyer track including a unitary supporting member having spaced standards, track rails removably mounted on the standards, an arm removably mounted on one of the standards, and a track cover removably suspended from said arm.

11. A conveyer track including rails having webs provided with transverse apertures, tie members including spaced plates for receiving the rail webs therebetween and having apertures registerable with said rail apertures, and wedges in said registering apertures for drawing the ends of the rails together.

12. A conveyer track including a rail support having a base portion and spaced vertical standards, an arm on each standard, a tie member on the arm, means for insulating the tie member from the arm, aligned rails carried by the arms, and means on the tie members for conductively connecting the rails.

13. A conveyer track including a plurality of rail supports each having a base portion and long and short standards spaced by said base portions, aligned rails carried by the long supports, aligned rails carried by the short supports in parallel relation to said first named rails, arms on the long supports, and a cover carried by said arms and extending over the rails.

14. A conveyer track including a plurality of rail supports each having spaced long and short standards, aligned rail sections carried by the long supports, aligned rail sections carried by the short supports in parallel relation to the first named sections, arms on the long supports, and an arcuate cover carried by said arms having one longitudinal edge bearing against the long supports and its opposite edge spaced from and overhanging the short supports.

WILSIE JAMES ALLMAN.