(19) Europäisches Patentamt
European Patent Office
Office européen des brevets

(11) **EP 4 184 088 B1**

(12) **EUROPEAN PATENT SPECIFICATION**

(45) Date of publication and mention of the grant of the patent:
29.01.2025 Bulletin 2025/05

(21) Application number: **21793703.6**

(22) Date of filing: **28.04.2021**

(51) International Patent Classification (IPC):
F25C 5/18 *(2018.01)*

(52) Cooperative Patent Classification (CPC):
F25C 5/187

(86) International application number:
PCT/CN2021/090383

(87) International publication number:
WO 2021/213528 (28.10.2021 Gazette 2021/43)

(54) ICE MAKING DEVICE AND REFRIGERATOR

EISHERSTELLUNGSVORRICHTUNG UND KÜHLSCHRANK

DISPOSITIF DE FABRICATION DE GLACE ET RÉFRIGÉRATEUR

(84) Designated Contracting States:
AL AT BE BG CH CY CZ DE DK EE ES FI FR GB GR HR HU IE IS IT LI LT LU LV MC MK MT NL NO PL PT RO RS SE SI SK SM TR

(30) Priority: **16.07.2020 CN 202010685335**

(43) Date of publication of application:
24.05.2023 Bulletin 2023/21

(73) Proprietors:
- **QINGDAO HAIER RREFRIGERATOR CO., LTD.**
  Qingdao, Shandon 266101 (CN)
- **HAIER SMART HOME CO., LTD.**
  Laoshan
  Qingdao
  Shandong 266101 (CN)

(72) Inventors:
- **DU, Qihai**
  Qingdao, Shandong 266101 (CN)
- **ZHANG, Yanqing**
  Qingdao, Shandong 266101 (CN)
- **ZHAO, Zhenyu**
  Qingdao, Shandong 266101 (CN)
- **YANG, Jun**
  Qingdao, Shandong 266101 (CN)
- **ZHANG, Fangyou**
  Qingdao, Shandong 266101 (CN)

(74) Representative: **Winter, Brandl - Partnerschaft mbB**
Alois-Steinecker-Straße 22
85354 Freising (DE)

(56) References cited:
CN-A- 102 345 955
CN-A- 106 766 458
CN-U- 202 002 416
CN-U- 207 865 778
JP-A- H0 336 475
KR-Y1- 200 150 820
US-A1- 2010 037 631
US-A1- 2012 240 612
US-B2- 10 663 205

Note: Within nine months of the publication of the mention of the grant of the European patent in the European Patent Bulletin, any person may give notice to the European Patent Office of opposition to that patent, in accordance with the Implementing Regulations. Notice of opposition shall not be deemed to have been filed until the opposition fee has been paid. (Art. 99(1) European Patent Convention).

EP 4 184 088 B1

Description

TECHNICAL FIELD

[0001] The present invention relates to the field of home appliances, and in particular, to an ice making apparatus and a refrigerator.

BACKGROUND

[0002] The ice discharged from the ice machine into the ice storage box tends to accumulate directly below the ice machine and does not fill the box evenly, resulting in wasted volume in the ice storage box. Relevant prior art is disclosed in US 2010/037631 A1, in accordance to the preamble of claim 1, and in US 2012/240612 A1.

SUMMARY

[0003] In order to solve the above problems, the present invention provides an ice making device and a refrigerator.

[0004] In order to achieve one of the above-mentioned objects of the invention, an embodiment of the invention provides an ice making apparatus, comprising:
an ice making assembly and an ice storage box under the ice making assembly, wherein the ice making apparatus is characterized in that:

the ice storage box comprises an outer box and an inner box arranged in the outer box; the outer box has an ice receiving region under the ice making assembly and an ice storage region adjacent to the ice receiving region; and
the ice making apparatus further comprises a driving assembly capable of driving the inner box to move from the ice receiving region to the ice storage region.

[0005] As a further improvement to an embodiment of the present invention, further comprising: an ice amount detection module for detecting an amount of ice in the ice storage box; and
a control module for: when the inner box is in the ice receiving region and the ice amount detection module detects that an amount of ice in the inner box reaches an upper storage limit of the inner box, controlling the driving assembly to drive the inner box to move from the ice receiving region to the ice storage region.

[0006] As a further improvement to an embodiment of the present invention, wherein the control module is further used for: when the ice amount detection module detects that an amount of ice in the outer box or the ice storage box reaches a preset ice storage amount, controlling the ice making assembly to stop making ice.

[0007] As a further improvement to an embodiment of the present invention, wherein the ice amount detection module comprises a motor assembly and an ice probing rod, wherein the motor assembly is fixedly mounted on a side of an ice making tray; and the ice probing rod is rotatably mounted on a side of the ice making tray, may be driven by the motor assembly, and is used for probing an amount of ice in the ice receiving region.

[0008] As a further improvement to an embodiment of the present invention, wherein the ice amount detection module comprises a weight sensor mounted at a bottom of the outer box body.

[0009] As a further improvement to an embodiment of the present invention, wherein the ice amount detection module comprises a first weight sensor mounted at a bottom of the inner box and a second weight sensor mounted at a bottom of the outer box.

[0010] As a further improvement to an embodiment of the present invention, wherein the driving assembly comprises a coil and a magnet, wherein the coil is mounted on a side, close to the ice receiving region, at an exterior of the ice storage box and faces the ice storage region; the magnet is mounted on the inner box body; and the coil is opposite the magnet when the inner box is in the ice receiving region.

[0011] In order to achieve one of the above-mentioned objects of the invention, an embodiment of the invention provides a refrigerator, comprising: a cabinet and a door, as well as an ice making apparatus mounted in the cabinet or on the door, wherein the ice making apparatus comprises an ice making assembly and an ice storage box under the ice making assembly;
the refrigerator is characterized in that: the ice storage box comprises an outer box and an inner box arranged in the outer box; the outer box has an ice receiving region under the ice making assembly and an ice storage region adjacent to the ice receiving region; and the ice making apparatus further comprises a driving assembly capable of driving the inner box to move from the ice receiving region to the ice storage region.

[0012] As a further improvement to an embodiment of the present invention, wherein the refrigerator further comprises: an ice amount detection module for detecting an amount of ice in the ice storage box; and
a control module for: when the inner box is in the ice receiving region and the ice amount detection module detects that an amount of ice in the inner box reaches an upper storage limit of the inner box, controlling the driving assembly to drive the inner box to move from the ice receiving region to the ice storage region.

[0013] As a further improvement to an embodiment of the present invention, wherein the control module is further used for: when the ice amount detection module detects that an amount of ice in the outer box or the ice storage box reaches a preset ice storage amount, controlling the ice making assembly to stop making ice.

[0014] As a further improvement to an embodiment of the present invention, wherein the ice amount detection module comprises a motor assembly and an ice probing rod, wherein the motor assembly is fixedly mounted on a side of an ice making tray; and the ice probing rod is

rotatably mounted on a side of the ice making tray, may be driven by the motor assembly, and is used for probing an amount of ice in the ice receiving region.

[0015] As a further improvement to an embodiment of the present invention, wherein the ice amount detection module comprises a weight sensor mounted at a bottom of the outer box.

[0016] As a further improvement to an embodiment of the present invention, wherein the ice amount detection module comprises a first weight sensor mounted at a bottom of the inner box and a second weight sensor mounted at a bottom of the outer box.

[0017] As a further improvement to an embodiment of the present invention, wherein the cabinet comprises a refrigerating chamber and a freezing chamber; the ice making assembly is mounted on a side of an inner back wall of the freezing chamber; the ice storage box is drawably mounted in the freezing chamber; the ice receiving region is formed on a side, close to a back wall of the freezing chamber, of the outer box; the ice storage region is formed on a side, away from the back wall of the freezing chamber, of the outer box; the driving assembly comprises a coil and a magnet; the coil is mounted on the back wall; the magnet is mounted on the inner box ; and the coil is opposite the magnet when the inner box is in the ice receiving region.

[0018] According to an ice making apparatus and a refrigerator provided in the present invention, an ice storage box includes an outer box body and an inner box body arranged in the outer box body, and the inner box body can move from an ice receiving region to an ice storage region, so that both the ice receiving region and the ice storage region that are in the outer box body can store ice, thereby avoiding waste of an internal volume of the ice storage box because ice is accumulated only in the ice receiving region.

BRIEF DESCRIPTION OF THE DRAWINGS

[0019]

FIG. 1 is a schematic diagram of a refrigerator according to an embodiment of the present invention; and

FIG. 2 is a schematic diagram of an ice making apparatus according to an embodiment of the present invention.

DETAILED DESCRIPTION

[0020] To enable a person skilled in the art better understand the technical solutions of the present invention, the following clearly and completely describes the technical solutions in the embodiments of the present invention with reference to the accompanying drawings in the embodiments of the present invention. Apparently, the described embodiments are merely some rather than all of the embodiments of the present invention. All other embodiments obtained by a person of ordinary skill in the art based on the embodiments of the present invention without creative efforts shall fall within the protection scope of the present invention.

[0021] Referring to FIG. 1, an embodiment of the present invention provides a refrigerator 100, including a cabinet 110 and a door used for opening and closing the cabinet 110. The cabinet 110 may be provided with a refrigerating chamber and a freezing chamber therein. An ice making apparatus is mounted in the freezing chamber. Certainly, the ice making apparatus may be mounted on a freezing chamber door, a refrigerating chamber door, or in the refrigerating chamber.

[0022] Referring to FIG. 1 and FIG. 2, the ice making apparatus includes an ice making assembly 210 and an ice storage box 220 under the ice making assembly 210. The ice making assembly 210 may include an ice making rack 211, an ice making tray 212, and a water supply assembly. The ice making rack 211 is fixedly mounted in the cabinet 110 or the door of the refrigerator 100. The ice making tray 212 is connected to the ice making rack 211. The water supply assembly is used for supplying liquid water to the ice making tray 212. The ice making apparatus may separate ice by twisting or by using an ice ejecting apparatus.

[0023] The ice storage box 220 includes an outer box 221 and an inner box 222 arranged in the outer box 221. The outer box 221 has an ice receiving region 223 under the ice making assembly 210 and an ice storage region 224 adjacent to the ice receiving region 223. The ice making apparatus further includes a driving assembly 230. The driving assembly 230 can drive the inner box 222 to move from the ice receiving region 223 to the ice storage region 224.

[0024] In this embodiment, the bottom area of the outer box 221 is greater than the area of the ice making tray 212. A projection, towards a bottom surface of the outer box body 221, of the ice making tray 212 is completely in the bottom surface of the outer box body 221. The ice receiving region 223 may be disposed under the ice making tray 212. Ice discharged from the ice making tray 212 directly falls into the ice receiving region 223. The ice storage region 224 is adjacent to the ice receiving region 223. When the inner box 222 is disposed in the ice receiving region 223, the projection, towards the bottom surface of the outer box 221, of the ice making tray 212 is completely in a bottom surface of the inner box 222, and the bottom surface of the inner box 222 can completely cover the ice receiving region 223. When ice making is started, the inner box 222 may be disposed in the ice receiving region 223, and ice made by the ice making assembly 210 is directly discharged into the inner box 222. When amount of ice in the inner box 222 reaches an upper storage limit of ice in the inner box body 222, the driving assembly 230 drives the inner box 222 to move to the ice storage region 224. At this time, ice made by the ice making assembly 210 directly falls to the ice receiving region 223 of the outer box 221. Specifically, the area of

the ice storage region 224 may be equal to the area of the ice receiving region 223, and the bottom area of the inner box 222 may be the same as the area of the ice receiving region 223.

[0025] An internal bottom surface of the outer box 221 is provided with a guide rail 225 extending from the ice receiving region 223 to the ice storage region 224. Rollers 226 matching the guide rail 225 are mounted at a bottom of the inner box 222. The inner box 222 can move from the ice receiving region 223 to the ice storage region 224 along the guide rail 225.

[0026] In this way, as the inner box 222 capable of moving from the ice receiving region 223 to the ice storage region 224 is disposed in the outer box 221 of the ice storage box 220, an internal volume of the ice storage box 220 can be fully utilized, thereby avoiding waste of the internal volume of the ice storage box 220 because ice is accumulated only in the ice receiving region 223 under the ice making tray 212.

[0027] Further, in an embodiment of the present invention, the refrigerator 100 further includes an ice amount detection module and a control module. The ice amount detection module is used for detecting the amount of ice in the ice storage box 220. When the inner box 222 is in the ice receiving region 223, and the ice amount detection module detects that the amount of ice in the inner box 222 reaches the upper storage limit of the inner box 222, the control module controls the driving assembly 230 to drive the inner box 222 to move from the ice receiving region 223 to the ice storage region 224.

[0028] In this embodiment, the ice amount detection module may be used for detecting an amount of ice in the inner box 222 or the outer box 221, or a total amount of ice in the outer box 221 and the inner box 222; and the ice amount detection module may be an ice probing rod 215 on a side of the ice making tray 212, or may be a weight sensor or another sensor. There may be one ice amount detection module; or there may be a plurality of ice amount detection modules used for detecting amounts of ice in different regions. The plurality of ice amount detection modules may use the same ice amount detection mode or different ice amount detection modes.

[0029] The control module may be a control module in a refrigerator 100 system, or may be an independent module disposed on the ice making apparatus and independent of the refrigerator 100 system. The ice making apparatus may further include a position detection module used for detecting whether the inner box 222 is in the ice receiving region 223. The position detection module may be an ultrasonic sensor, an infrared sensor, or an optical proximity sensor mounted in the ice receiving region 223.

[0030] When the inner box 222 is in the ice receiving region 223, ice discharged by the ice making assembly 210 is directly received by the inner box 222. At this time, if the ice amount detection module detects that the amount of ice in the inner box 222 reaches the upper storage limit of the inner box 222, the control module may control the driving assembly 230 to drive the inner box 222 to move from the ice receiving region 223 to the ice storage region 224. After the inner box 222 moves from the ice receiving region 223 to the ice storage region 224, the ice receiving region 223 is in an ice-free state again, and the ice made by the ice making assembly 210 may continue being discharged to the ice receiving region 223.

[0031] In this way, an ice amount is detected by an ice amount sensor. When the amount of ice in the inner box 222 reaches the upper ice storage limit, the inner box 222 is automatically controlled to move from the ice receiving region 223 to the ice storage region 224. Therefore, internal storage space of the ice storage box 220 is fully utilized, and more ice can be stored in the ice storage box 220.

[0032] Further, in an embodiment of the present invention, the control module is further used for: when the ice amount detection module detects that an amount of ice in the outer box 221 or the ice storage box 220 reaches a preset ice storage amount, controlling the ice making assembly 210 to stop making ice.

[0033] In this embodiment, the preset ice storage amount may be an upper ice storage limit, or another value smaller than the upper ice storage limit. An ice amount input module may be disposed on the refrigerator 100. A user may input, according to the user's demand by using the ice amount input module, the preset ice storage amount by which ice is desired to be stored in the ice storage box 220. The control module controls running of the ice making assembly 210 according to the preset ice storage amount input by the user. If the user has not input the preset ice storage amount, it may be considered by default that the preset ice storage amount is the upper ice storage limit.

[0034] In this way, the start/stop of the ice making assembly 210 is automatically controlled according to an ice amount, which is convenient and fast.

[0035] Further, in an embodiment of the present invention, the ice amount detection module includes a motor assembly 214 and an ice probing rod 215. The motor assembly 214 is fixedly mounted on a side of the ice making tray 212. The ice probing rod 215 is rotatably mounted on a side of the ice making tray 212, may be driven by the motor assembly 214, and is used for probing an amount of ice in the ice receiving region 223.

[0036] In this embodiment, after ice separating of the ice making assembly 210 is completed, the motor assembly 214 may be started to drive the ice probing rod 215 to rotate, thereby detecting the amount of ice in the ice receiving region 223. When the inner box 222 is in the ice receiving region 223, ice discharged by the ice making assembly 210 is directly discharged into the inner box 222. At this time, when the ice probing rod 215 detects that the amount of ice in the ice receiving region 223 reaches the upper storage limit, that is, the amount of ice in the inner box 222 reaches the upper storage limit, the driving assembly 230 is controlled to drive the inner box

222 to move from the ice receiving region 223 to the ice storage region 224. After the inner box 222 moves to the ice storage region 224, the ice making assembly 210 continues to make ice. When the inner box 222 is in the ice storage region 224, if the ice probing rod 215 detects that the amount of ice in the ice receiving region 223 reaches the upper ice storage limit, that is, an amount of ice in the outer box 221 or the ice storage box 220 reaches the upper storage limit, the control module controls the ice making assembly 210 to stop making ice.

[0037] In this way, by detecting the amount of ice in the ice receiving region 223 by the ice probing rod 215, the movement of the inner box body 222 and start/stop of an ice making assembly can be controlled, thereby ensuring that internal space of the ice storage box 220 is fully utilized, and the overall structure is simple and compact.

[0038] In another embodiment of the present invention, the ice amount detection module further includes a weight sensor mounted at a bottom of the outer box 221. The weight sensor can detect an amount of ice stored in the ice storage box 220, namely, a total amount of ice stored in the outer box 221 and the inner box 222. An ice amount input module may be disposed on the refrigerator 100. The user may input, by using the ice amount input module, a preset ice storage weight by which ice is desired to be stored in the ice storage box 220. When the weight sensor detects that the amount of ice stored in the ice storage box 220 reaches the preset ice storage weight or an upper ice storage limit of the ice storage box 220, the control module controls the ice making assembly 210 to stop making ice.

[0039] Specifically, in this embodiment, in addition, the amount of ice in the ice receiving region 223 may be detected by the ice probing rod 215. After ice separating of the ice making assembly 210 is completed, the motor assembly 214 is started to drive the ice probing rod 215 to detect the amount of ice in the ice receiving region 223. When the inner box 222 is in the ice receiving region 223, and the ice probing rod 215 detects that the amount of ice in the ice receiving region 223 reaches the upper storage limit, that is, the amount of ice in the inner box 222 reaches the upper storage limit, the driving assembly 230 may be controlled to drive the inner box 222 to move from the ice receiving region 223 to the ice storage region 224. If the weight sensor detects that the amount of ice in the ice storage box 220 reaches the preset ice storage amount, the ice making assembly 210 may be controlled to stop making ice. When the inner box 222 is in the ice storage region 224, if the ice probing rod 215 detects that the amount of ice in the ice receiving region 223 reaches the upper storage limit, or if the weight sensor detects that an ice amount reaches the preset ice storage amount, the ice making assembly 210 is controlled to stop making ice.

[0040] In this way, an amount of ice stored in the ice storage box 220 can be accurately obtained by providing the weight sensor. The weight sensor may be used in combination with the ice probing rod 215, thereby improving control accuracy and preventing ice from overflowing the ice storage box 220 because the ice amount is too large.

[0041] In still another embodiment of the present invention, the ice amount detection module includes a first weight sensor mounted at a bottom of the inner box 222 and a second weight sensor mounted at a bottom of the outer box 221. The first weight sensor can detect the amount of ice stored in the inner box 222. The second weight sensor can detect the amount of ice stored in the ice storage box 220, that is, the second weight sensor can detect the total amount of ice stored in the inner box 222 and the outer box 221.

[0042] In this embodiment, when the inner box 222 is in the ice receiving region 223, if the first weight sensor detects that the amount of ice in the inner box 222 reaches the upper ice storage limit of the inner box 222, the driving assembly 230 is controlled to drive the inner box 222 to move from the ice receiving region 223 to the ice storage region 224. If the second weight sensor detects that the amount of ice in the ice storage box 220 reaches the preset ice storage amount, the ice making assembly 210 is controlled to stop making ice. The preset ice storage amount may be input by the user using the ice amount input module, or may be the upper ice storage limit of the ice storage box 220 set at the factory.

[0043] In this way, the two weight sensors are provided to respectively detect amounts of ice in the inner box 222 and the ice storage box 220, thereby ensuring accuracy of ice amount detection.

[0044] Further, in an embodiment of the present invention, the driving assembly 230 is an electromagnetic driving assembly 230. The driving assembly 230 includes a coil 231 and a magnet 232. The coil 231 is mounted on a side, close to the ice receiving region 223, at an exterior of the ice storage box 220 and faces the ice storage region 224. The magnet 232 is mounted on the inner box 222. The coil 231 is opposite the magnet 232 when the inner box 222 is in the ice receiving region 223. Specifically, an accommodating space for accommodating the magnet 232 is provided in a back wall, adjacent to the coil 231, of the inner box 222.

[0045] The coil 231 may be mounted independent of the ice storage box 220. The coil 231 may be mounted on the cabinet 110 or the door of the refrigerator 100; or an independent bracket used for mounting of the coil 231 may be disposed on a side of the ice storage box 220. The magnet 232 is fixed on the inner box 222 and can move together with the inner box 222.

[0046] In this embodiment, when the inner box 222 is in the ice receiving region 223, and the ice amount detection module detects that the amount of ice in the inner box 222 reaches the upper storage limit, the control module controls the coil 231 to be energized, thereby driving the magnet 232 to drive the inner box 222 to move towards the ice storage region 224. When the ice amount detection module detects that an amount of ice in the outer box 221 or the ice storage box 220 reaches the upper storage limit, the ice making assembly 210 is controlled to stop

making ice.

[0047] In an embodiment of the present invention, the ice making assembly 210 is mounted on a side of a back wall of the freezing chamber. A length direction of the ice making tray 212 may be parallel to a width direction of the back wall of the freezing chamber, that is, the ice making tray 212 is transversally disposed in the freezing chamber, thereby facilitating mounting of the ice making assembly 210. The ice storage box 220 is drawably mounted in the freezing chamber. A back wall of the ice storage box 220 is adjacent to the back wall of the freezing chamber. Specifically, the back wall of the ice storage box 220 is adjacent to an air duct cover plate 113 on the back wall of the freezing chamber. The ice receiving region 223 is formed on a side, close to the back wall of the freezing chamber, of the ice storage box 220; and the ice storage region 224 is formed on a side, away from the back wall of the freezing chamber, of the ice storage box 220. The coil 231 is mounted on the back wall of the freezing chamber. Specifically, the coil 231 is mounted on the air duct cover plate 113 on the back wall of the freezing chamber.

[0048] The driving assembly 230 is an electromagnetic driving assembly 230. The coil 231 and the magnet 232 are separated from each other. The user may directly take out the ice storage box 220 to get ice, or merely take out the inner box 222 in the outer box 221 to get ice. After getting the ice, the user only needs to put the inner box 222 back to the ice receiving region 223, or put the ice storage box 220 back to an original position. Therefore, the operation is convenient.

[0049] In summary, according to the ice making apparatus and the refrigerator 100 provided in the present invention, the ice storage box 220 includes the outer box 221 and the inner box 222 arranged in the outer box 221, and the inner box 222 can move in the outer box 221 from the ice receiving region 223 to the ice storage region 224, thereby avoiding an influence on the utilization of the internal volume of the ice storage box 220 caused by accumulation of ice in the ice receiving region 223.

[0050] It should be understood that although the present invention is described in terms of embodiments in the description, not every embodiment includes only one independent technical solution. The statement mode of the description is merely for clarity, and those skilled in the art should regard the description as a whole. The technical solutions in various embodiments may also be combined properly to develop other embodiments that can be understood by those skilled in the art.

[0051] The series of detailed illustrations listed above are merely for specifically illustrating the feasible embodiments of the present invention, but not intended to limit the protection scope of the present invention which is delimited only by the appended claims.

Claims

1. An ice making apparatus, comprising:
an ice making assembly (210) and an ice storage box (220) under the ice making assembly, wherein the ice making apparatus is **characterized in that**:

   the ice storage box comprises an outer box (221) and an inner box (222) arranged in the outer box; the outer box has an ice receiving region (223) under the ice making assembly and an ice storage region (224) adjacent to the ice receiving region; and
   the ice making apparatus further comprises a driving assembly (230) capable of driving the inner box to move from the ice receiving region (223) to the ice storage region (224).

2. The ice making apparatus according to claim 1, further comprising: an ice amount detection module for detecting an amount of ice in the ice storage box (220); and
a control module for: when the inner box is in the ice receiving region and the ice amount detection module detects that an amount of ice in the inner box reaches an upper storage limit of the inner box, controlling the driving assembly to drive the inner box to move from the ice receiving region to the ice storage region.

3. The ice making apparatus according to claim 2, wherein the control module is further used for: when the ice amount detection module detects that an amount of ice in the outer box or the ice storage box reaches a preset ice storage amount, controlling the ice making assembly Z (210) to stop making ice.

4. The ice making apparatus according to claim 2, wherein the ice amount detection module comprises a motor assembly (214) and an ice probing rod (215), wherein the motor assembly is fixedly mounted on a side of an ice making tray; and the ice probing rod is rotatably mounted on a side of the ice making tray, may be driven by the motor assembly, and is used for probing an amount of ice in the ice receiving region (223).

5. The ice making apparatus according to claim 2, wherein the ice amount detection module comprises a weight sensor mounted at a bottom of the outer box bod) (221).

6. The ice making apparatus according to claim 2, wherein the ice amount detection module comprises a first weight sensor mounted at a bottom of the inner box and a second weight sensor mounted at a bottom of the outer box.

7. The ice making apparatus according to claim 1, wherein the driving assembly (230) comprises a coil (231) and a magnet (232), wherein the coil is mounted on a side, close to the ice receiving region, at an exterior of the ice storage box and faces the ice storage region; the magnet is mounted on the inner box body; and the coil is opposite the magnet when the inner box is in the ice receiving region.

8. A refrigerator (100), comprising: a cabinet (110) and a door, as well as an ice making apparatus mounted in the cabinet or on the door, wherein the ice making apparatus comprises an ice making assembly (210) and an ice storage box (220) under the ice making assembly;

   the refrigerator is **characterized in that**: the ice storage box comprises an outer box (221) and an inner box (222) arranged in the outer box; the outer box has an ice receiving region under the ice making assembly and an ice storage region adjacent to the ice receiving region; and
   the ice making apparatus further comprises a driving assembly (230) capable of driving the inner box to move from the ice receiving region (223) to the ice storage region (224).

9. The refrigerator according to claim 8, wherein the refrigerator further comprises: an ice amount detection module for detecting an amount of ice in the ice storage box; and
   a control module for: when the inner box is in the ice receiving region and the ice amount detection module detects that an amount of ice in the inner box reaches an upper storage limit of the inner box, controlling the driving assembly (230) to drive the inner box to move from the ice receiving region (223) to the ice storage region (224).

10. The refrigerator according to claim 9, wherein the control module is further used for: when the ice amount detection module detects that an amount of ice in the outer box or the ice storage box reaches a preset ice storage amount, controlling the ice making assembly (230) to stop making ice.

11. The refrigerator according to claim 9, wherein the ice amount detection module comprises a motor assembly (214) and an ice probing rod (215), wherein the motor assembly is fixedly mounted on a side of an ice making tray; and the ice probing rod is rotatably mounted on a side of the ice making tray, may be driven by the motor assembly, and is used for probing an amount of ice in the ice receiving region.

12. The refrigerator according to claim 9, wherein the ice amount detection module comprises a weight sensor mounted at a bottom of the outer box.

13. The refrigerator according to claim 9, wherein the ice amount detection module comprises a first weight sensor mounted at a bottom of the inner box and a second weight sensor mounted at a bottom of the outer box.

14. The refrigerator according to claim 8, wherein the cabinet comprises a refrigerating chamber and a freezing chamber; the ice making assembly is mounted on a side of an inner back wall of the freezing chamber; the ice storage box (220) is drawably mounted in the freezing chamber; the ice receiving region is formed on a side, close to a back wall of the freezing chamber, of the outer box; the ice storage region is formed on a side, away from the back wall of the freezing chamber, of the outer box; the driving assembly comprises a coil (231) and a magnet (232), the coil is mounted on the back wall; the magnet is mounted on the inner box ; and the coil is opposite the magnet when the inner box is in the ice receiving region.

Patentansprüche

1. Eiserzeugungsvorrichtung, aufweisend:
   eine Eiserzeugungsanordnung (210) und einen Eisaufbewahrungsbehälter (220) unter der Eiserzeugungsanordnung, **dadurch gekennzeichnet, dass**:

   der Eisaufbewahrungsbehälter einen äußeren Behälter (221) und einen in dem äußeren Behälter angeordneten inneren Behälter (222) aufweist; wobei der äußere Behälter einen Eisaufnahmebereich (223) unter der Eiserzeugungsanordnung und einen Eisaufbewahrungsbereich (224), der zum Eisaufnahmebereich benachbar ist, aufweist; und
   die Eiserzeugungsvorrichtung ferner eine Antriebsanordnung (230) aufweist, die in der Lage ist, den inneren Behälter anzutreiben, um ihn von dem Eisaufnahmebereich (223) zu dem Eisaufbewahrungsbereich (224) zu bewegen.

2. Eiserzeugungsvorrichtung nach Anspruch 1, ferner aufweisend: ein Eismengenerfassungsmodul zum Erfassen einer Eismenge in dem Eisaufbewahrungsbehälter (220); und
   ein Steuermodul zum Steuern der Antriebsanordnung, um den inneren Behälter anzutreiben, damit er sich von dem Eisaufnahmebereich zu dem Eisaufbewahrungsbereich bewegt, wenn sich der inneren Behälter in dem Eisaufnahmebereich befindet und das Eismengenerfassungsmodul erfasst, dass eine Eismenge in dem Inneren Behälter eine obere Aufbewahrungsgrenze des inneren Behälters erreicht.

3. Eiserzeugungsvorrichtung nach Anspruch 2, wobei das Steuermodul ferner dazu verwendet wird, die Eiserzeugungsanordung (210) zu steuern, um die Eiserzeugung zu stoppen, wenn das Eismengenerfassungsmodul erfasst, dass eine Eismenge in dem äußeren Behälter oder dem Eisaufbewahrungsbehälter eine voreingestellte Eisaufbewahrungsmenge erreicht.

4. Eiserzeugungsvorrichtung nach Anspruch 2, wobei das Eismengenerfassungsmodul eine Motoranordnung (214) und einen Eissondierstab (215) aufweist, wobei die Motoranordnung fest an einer Seite einer Eiserzeugungsschale angebracht ist; und der Eissondierstab drehbar an einer Seite der Eiserzeugungsschale angebracht ist, von der Motoranordnung angetrieben werden kann und zum Sondieren einer Eismenge in dem Eisaufnahmebereich (223) verwendet wird.

5. Eiserzeugungsvorrichtung nach Anspruch 2, wobei das Eismengenerfassungsmodul einen Gewichtssensor aufweist, der an einem Boden des äußeren Behälterkörpers (221) angebracht ist.

6. Eiserzeugungsvorrichtung nach Anspruch 2, wobei das Eismengenerfassungsmodul einen ersten Gewichtssensor aufweist, der an einem Boden des inneren Behälters angebracht ist, und einen zweiten Gewichtssensor, der an einem Boden des äußeren Behälters angebracht ist.

7. Eiserzeugungsvorrichtung nach Anspruch 1, wobei die Antriebsanordnung (230) eine Spule (231) und einen Magneten (232) aufweist, wobei die Spule an einer Seite nahe dem Eisaufnahmebereich an einer Außenseite des Eisaufbewahrungsbehälters angebracht ist und dem Eisaufbewahrungsbereich zugewandt ist; der Magnet am inneren Behälterkörper angebracht ist; und die Spule dem Magneten gegenüberliegt, wenn sich der innere Behälter im Eisaufnahmebereich befindet.

8. Kühlschrank (100), aufweisend ein Gehäuse (110) und eine Tür sowie eine Eiserzeugungsvorrichtung, die in dem Gehäuse oder an der Tür angebracht ist, wobei die Eiserzeugungsvorrichtung eine Eiserzeugungsanordnung (210) und einen Eisaufbewahrungsbehälter (220) unter der Eiserzeugungsanordnung aufweist;

   dadurch gekennzeichnet ist, dass: der Eisaufbewahrungsbehälter einen äußeren Behälter (221) und einen inneren Behälter (222) aufweist, der in dem äußeren Behälter angeordnet ist; der äußere Behälter einen Eisaufnahmebereich unter der Eiserzeugungsordnung und einen Eisaufbewahrungsbereich, der zum Eisaufnahmebereich benachbar ist, aufweist; und
   die Eiserzeugungsvorrichtung ferner eine Antriebsanordnung (230) aufweist, die in der Lage ist, den inneren Behälter anzutreiben, um ihn von dem Eisaufnahmebereich (223) zu dem Eisaufbewahrungsbereich (224) zu bewegen.

9. Kühlschrank nach Anspruch 8, wobei der Kühlschrank ferner aufweist: ein Eismengenerfassungsmodul zum Erfassen einer Eismenge in dem Eisaufbewahrungsbehälter; und
   ein Steuermodul zum Steuern der Antriebsanordnung (230), um den inneren Behälter anzutreiben, damit er sich von dem Eisaufnahmebereich (223) zu dem Eisaufbewahrungsbereich (224) bewegt, wenn sich der inneren Behälter in dem Eisaufnahmebereich befindet und das Eismengenerfassungsmodul erfasst, dass eine Eismenge in dem inneren Behälter eine obere Aufbewahrungsgrenze des inneren Behälters erreicht.

10. Kühlschrank nach Anspruch 9, wobei das Steuermodul ferner dazu verwendet wird, die Eiserzeugungsanordnung (230) zu steuern, um die Eiserzeugung zu stoppen, wenn das Eismengenerfassungsmodul erfasst, dass eine Eismenge in dem äußeren Behälter oder dem Eisaufbewahrungsbehälter eine voreingestellte Eisaufbewahrungsmenge erreicht.

11. Kühlschrank nach Anspruch 9, wobei das Eismengenerfassungsmodul eine Motoranordnung (214) und einen Eissondierstab (215) aufweist, wobei die Motorordnung fest an einer Seite eines Eiserzeugungsschale angebracht ist; und der Eissondierstab drehbar an einer Seite der Eiserzeugungsschale angebracht ist, von der Motoranordnung angetrieben werden kann und zum Erfassen einer Eismenge im Eisaufnahmebereich verwendet wird.

12. Kühlschrank nach Anspruch 9, wobei das Eismengenerfassungsmodul einen Gewichtssensor aufweist, der an einem Boden des äußeren Behälterkörpers angebracht ist.

13. Kühlschrank nach Anspruch 9, wobei das Eismengenerfassungsmodul einen ersten Gewichtssensor aufweist, der an einem Boden des inneren Behälters angebracht ist, und einen zweiten Gewichtssensor, der an einem Boden des äußeren Behälters angebracht ist.

14. Kühlschrank nach Anspruch 8, wobei das Gehäuse eine Kühlkammer und eine Gefrierkammer aufweist; die Eiserzeugungsordnung an einer Seite einer inneren Rückwand der Gefrierkammer angebracht ist; der Eisaufbewahrungsbehälter (220) in der Gefrierkammer auslosbar angebracht ist; der Eisaufnah-

mebereich an einer Seite des äußeren Behälters nahe einer Rückwand der Gefrierkammer ausgebildet ist; der Eisaufbewahrungsbereich an einer von der Rückwand der Gefrierkammer abgewandten Seite des äußeren Behälters ausgebildet ist; die Antriebsanordnung eine Spule (231) und einen Magneten (232) aufweist; die Spule an der Rückwand angebracht ist; der Magnet an dem inneren Behälter angebracht ist; und die Spule dem Magneten gegenüberliegt, wenn sich der innere Behälter in dem Eisaufnahmebereich befindet.

Revendications

1. Appareil de fabrication de glace comprenant :
un ensemble de fabrication de glace (210) et une boîte de stockage de glace (220) sous l'ensemble de fabrication de glace, dans lequel l'appareil de fabrication de glace est **caractérisé en ce que** :

   la boîte de stockage de glace comprend une boîte externe (221) et une boîte interne (222) agencée dans la boîte externe ; la boîte externe comporte une région de réception de glace (223) sous l'ensemble de fabrication de glace et une région de stockage de glace (224) adjacente à la région de réception de glace ; et
   l'appareil de fabrication de glace comprend en outre un ensemble d'entraînement (230) qui permet d'entraîner la boîte interne à se déplacer de la région de réception de glace (223) à la région de stockage de glace (224).

2. Appareil de fabrication de glace selon la revendication 1, comprenant en outre : un module de détection de quantité de glace pour détecter une quantité de glace dans la boîte de stockage de glace (220) ; et un module de commande pour : lorsque la boîte interne se trouve dans la région de réception de glace et que le module de détection de quantité de glace détecte qu'une quantité de glace dans la boîte interne atteint une limite de stockage supérieure de la boîte interne, commander l'ensemble d'entraînement pour entraîner la boîte interne à se déplacer de la région de réception de glace à la région de stockage de glace.

3. Appareil de fabrication de glace selon la revendication 2, dans lequel le module de commande est en outre utilisé pour : lorsque le module de détection de quantité de glace détecte qu'une quantité de glace dans la boîte externe ou la boîte de stockage de glace atteint une quantité de stockage de glace prédéfinie, commander l'ensemble de fabrication de glace (210) pour arrêter la fabrication de glace.

4. Appareil de fabrication de glace selon la revendication 2, dans lequel le module de détection de quantité de glace comprend un ensemble moteur (214) et une tige de sondage de glace (215), dans lequel l'ensemble moteur est monté à demeure sur un côté d'un plateau de fabrication de glace ; et la tige de sondage de glace est montée de manière rotative sur un côté du plateau de fabrication de glace, peut être entraînée par l'ensemble moteur, et est utilisée pour sonder une quantité de glace dans la région de réception de glace (223).

5. Appareil de fabrication de glace selon la revendication 2, dans lequel le module de détection de quantité de glace comprend un capteur de poids monté au fond du corps de boîte externe (221).

6. Appareil de fabrication de glace selon la revendication 2, dans lequel le module de détection de quantité de glace comprend un premier capteur de poids monté au fond de la boîte interne et un second capteur de poids monté au fond de la boîte externe.

7. Appareil de fabrication de glace selon la revendication 1, dans lequel l'ensemble d'entraînement (230) comprend une bobine (231) et un aimant (232), dans lequel la bobine est montée sur un côté, à proximité de la région de réception de glace, à l'extérieur de la boîte de stockage de glace et fait face à la région de stockage de glace ; l'aimant est monté sur le corps de boîte interne ; et la bobine est opposée à l'aimant lorsque la boîte interne se trouve dans la région de réception de glace.

8. Réfrigérateur (100), comprenant : une armoire (110) et une porte, ainsi qu'un appareil de fabrication de glace monté dans l'armoire ou sur la porte, dans lequel l'appareil de fabrication de glace comprend un ensemble de fabrication de glace (210) et une boîte de stockage de glace (220) sous l'ensemble de fabrication de glace ;

   le réfrigérateur est **caractérisé en ce que** : la boîte de stockage de glace comprend une boîte externe (221) et une boîte interne (222) agencée dans la boîte externe ; la boîte externe comporte une région de réception de glace sous l'ensemble de fabrication de glace et une région de stockage de glace adjacente à la région de réception de glace ; et
   l'appareil de fabrication de glace comprend en outre un ensemble d'entraînement (230) qui permet d'entraîner la boîte interne à se déplacer de la région de réception de glace (223) à la région de stockage de glace (224).

9. Réfrigérateur selon la revendication 8, dans lequel le réfrigérateur comprend en outre : un module de détection de quantité de glace pour détecter une

quantité de glace dans la boîte de stockage de glace ; et

un module de commande pour : lorsque la boîte interne se trouve dans la région de réception de glace et que le module de détection de quantité de glace détecte qu'une quantité de glace dans la boîte interne atteint une limite de stockage supérieure de la boîte interne, commander l'ensemble d'entraînement (230) pour entraîner la boîte interne à se déplacer de la région de réception de glace (223) à la région de stockage de glace (224).

10. Réfrigérateur selon la revendication 9, dans lequel le module de commande est en outre utilisé pour : lorsque le module de détection de quantité de glace détecte qu'une quantité de glace dans la boîte externe ou la boîte de stockage de glace atteint une quantité de stockage de glace prédéfinie, commander l'ensemble de fabrication de glace (230) pour arrêter la fabrication de glace.

11. Réfrigérateur selon la revendication 9, dans lequel le module de détection de quantité de glace comprend un ensemble moteur (214) et une tige de sondage de glace (215), dans lequel l'ensemble moteur est monté à demeure sur un côté d'un plateau de fabrication de glace ; et la tige de sondage de glace est montée de manière rotative sur un côté du plateau de fabrication de glace, peut être entraînée par l'ensemble moteur, et est utilisée pour sonder une quantité de glace dans la région de réception de glace.

12. Réfrigérateur selon la revendication 9, dans lequel le module de détection de quantité de glace comprend un capteur de poids monté au fond du boîtier extérieur.

13. Réfrigérateur selon la revendication 9, dans lequel le module de détection de quantité de glace comprend un premier capteur de poids monté au fond de la boîte interne et un second capteur de poids monté au fond de la boîte externe.

14. Réfrigérateur selon la revendication 8, dans lequel l'armoire comprend une chambre de réfrigération et une chambre de congélation ; l'ensemble de fabrication de glace est monté sur un côté d'une paroi arrière interne de la chambre de congélation ; la boîte de stockage de glace (220) est montée de manière amovible dans la chambre de congélation ; la région de réception de glace est formée sur un côté, proche d'une paroi arrière de la chambre de congélation, de la boîte externe ; la région de stockage de glace est formée sur un côté, éloigné de la paroi arrière de la chambre de congélation, de la boîte externe; l'ensemble d'entraînement comprend une bobine (231) et un aimant (232), la bobine est montée sur la paroi arrière ; l'aimant est monté sur la boîte interne ; et la bobine est opposée à l'aimant lorsque la boîte interne se trouve dans la région de réception de glace.

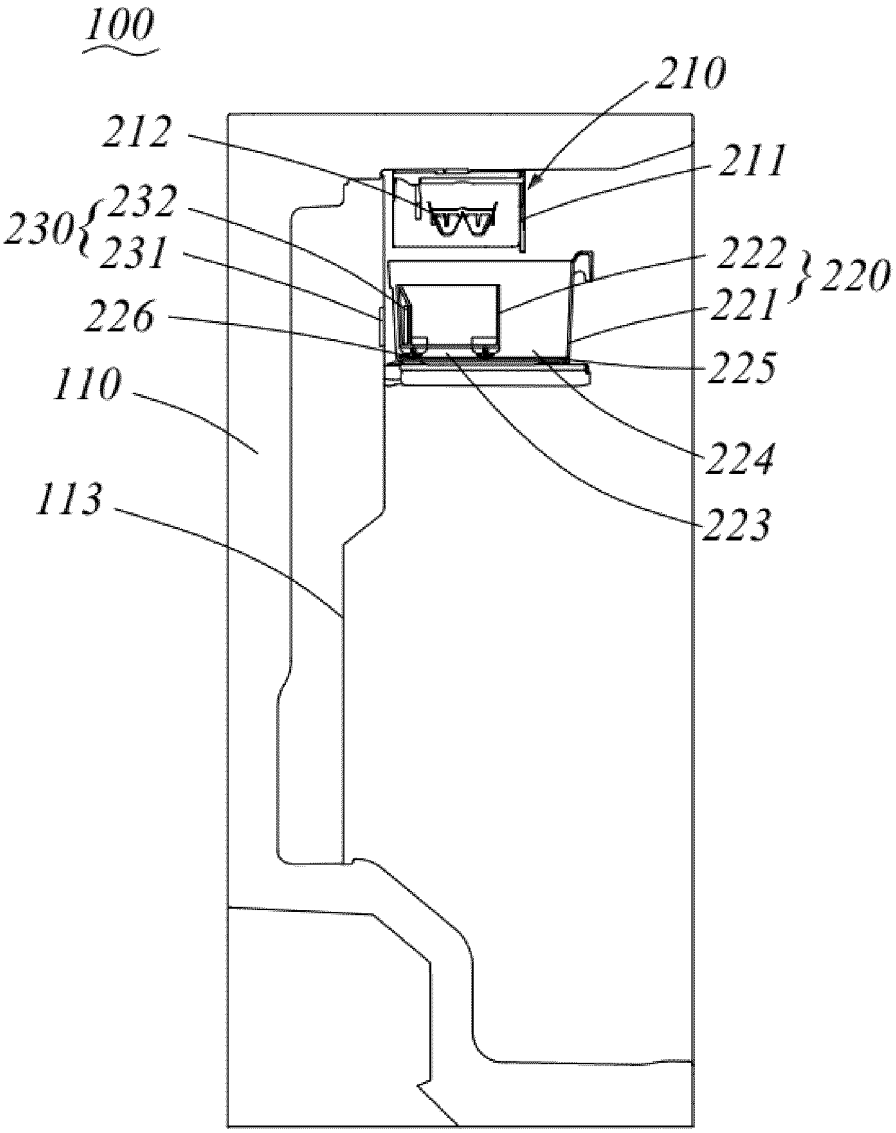

FIG. 1

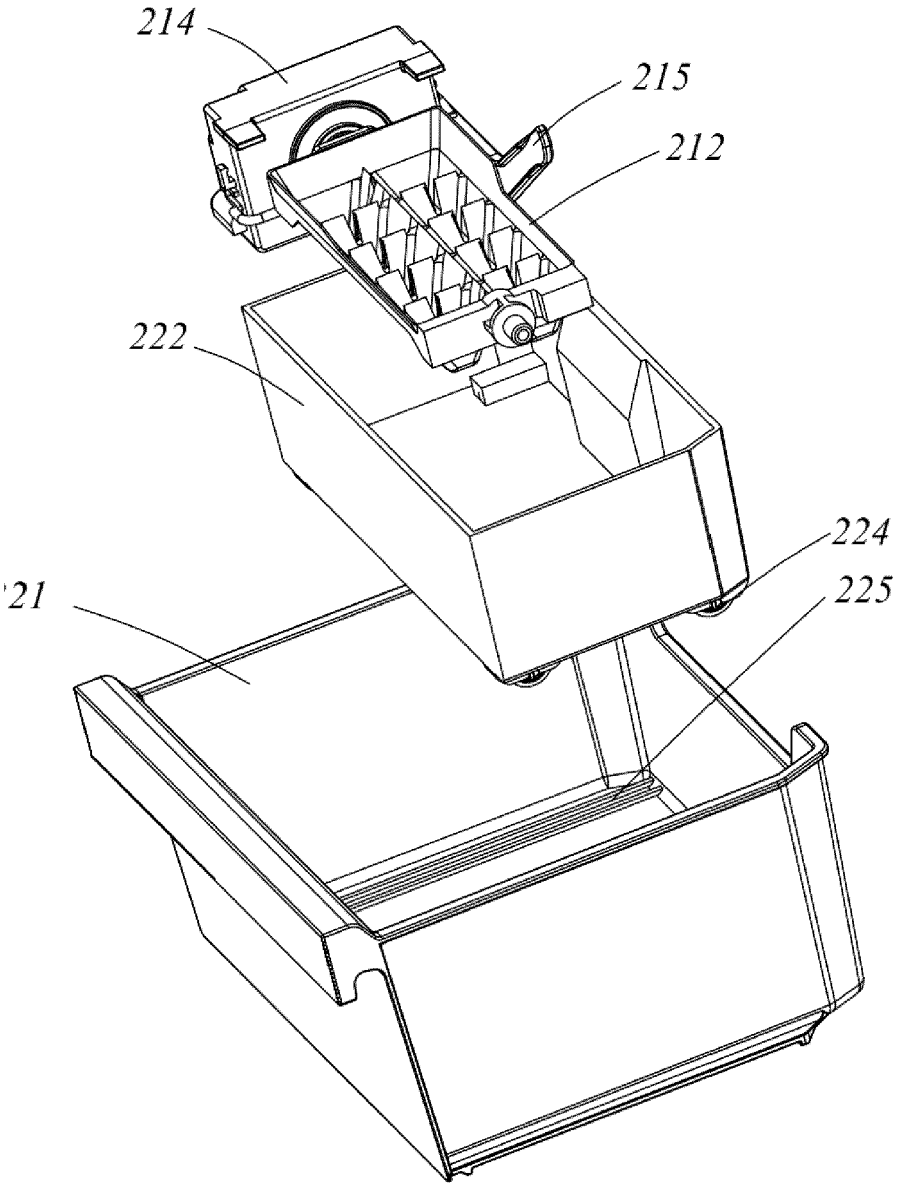

FIG. 2

REFERENCES CITED IN THE DESCRIPTION

This list of references cited by the applicant is for the reader's convenience only. It does not form part of the European patent document. Even though great care has been taken in compiling the references, errors or omissions cannot be excluded and the EPO disclaims all liability in this regard.

Patent documents cited in the description

- US 2010037631 A1 **[0002]**
- US 2012240612 A1 **[0002]**