(12) INTERNATIONAL APPLICATION PUBLISHED UNDER THE PATENT COOPERATION TREATY (PCT)

(19) World Intellectual Property Organization
International Bureau

(43) International Publication Date
16 November 2006 (16.11.2006)

PCT

(10) International Publication Number
WO 2006/120569 A3

(51) International Patent Classification:
C05F 17/02 (2006.01) *C05F 9/02* (2006.01)

(21) International Application Number:
PCT/IB2006/001493

(22) International Filing Date: 5 May 2006 (05.05.2006)

(25) Filing Language: English

(26) Publication Language: English

(30) Priority Data:
2005902290 6 May 2005 (06.05.2005) AU

(71) Applicant and
(72) Inventor: **CHEE, Eng Lock David** [SG/SG]; 2 River Valley Close #03-06, Singapore 238428 (SG).

(81) **Designated States** *(unless otherwise indicated, for every kind of national protection available)*: AE, AG, AL, AM, AT, AU, AZ, BA, BB, BG, BR, BW, BY, BZ, CA, CH, CN, CO, CR, CU, CZ, DE, DK, DM, DZ, EC, EE, EG, ES, FI, GB, GD, GE, GH, GM, HR, HU, ID, IL, IN, IS, JP, KE, KG, KM, KN, KP, KR, KZ, LC, LK, LR, LS, LT, LU, LV, LY, MA, MD, MG, MK, MN, MW, MX, MZ, NA, NG, NI, NO, NZ, OM, PG, PH, PL, PT, RO, RU, SC, SD, SE, SG, SK, SL, SM, SY, TJ, TM, TN, TR, TT, TZ, UA, UG, US, UZ, VC, VN, YU, ZA, ZM, ZW.

(84) **Designated States** *(unless otherwise indicated, for every kind of regional protection available)*: ARIPO (BW, GH, GM, KE, LS, MW, MZ, NA, SD, SL, SZ, TZ, UG, ZM, ZW), Eurasian (AM, AZ, BY, KG, KZ, MD, RU, TJ, TM), European (AT, BE, BG, CH, CY, CZ, DE, DK, EE, ES, FI, FR, GB, GR, HU, IE, IS, IT, LT, LU, LV, MC, NL, PL, PT, RO, SE, SI, SK, TR), OAPI (BF, BJ, CF, CG, CI, CM, GA, GN, GQ, GW, ML, MR, NE, SN, TD, TG).

Published:
— *with international search report*
— *before the expiration of the time limit for amending the claims and to be republished in the event of receipt of amendments*

[Continued on next page]

(54) **Title:** WASTE CONVERTER

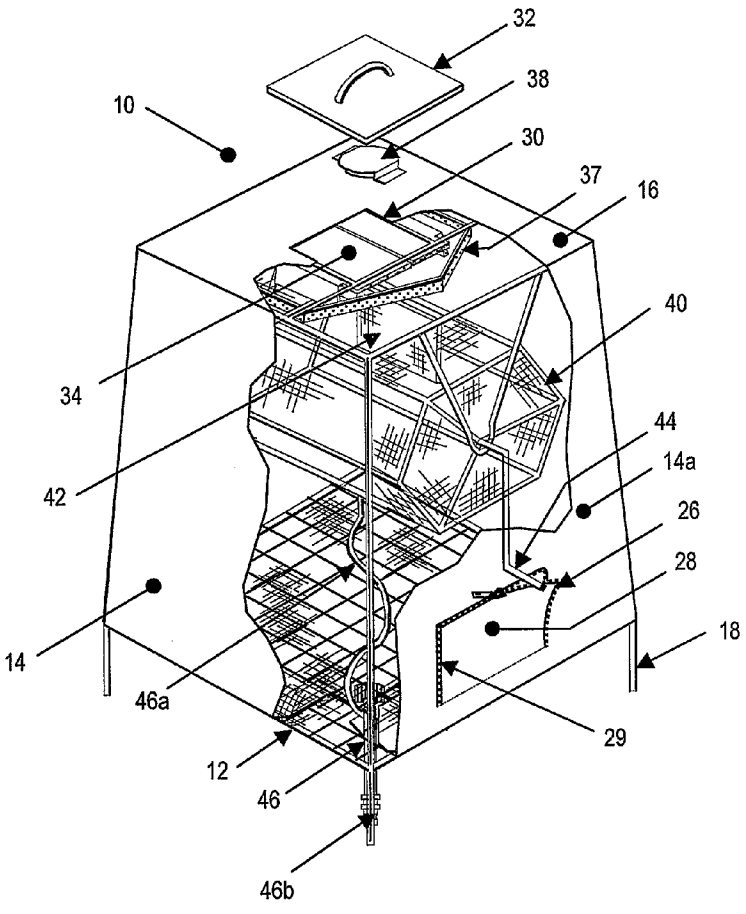

(57) **Abstract:** A waste converter (10) for domestic use includes two waste conversion regions. Household waste is placed in a primary waste conversion region (40) which includes flies and maggots. When waste has sufficiently decomposed it falls through to a secondary waste conversion region which includes composting worms and woodlice.

WO 2006/120569 A3

(88) Date of publication of the international search report:
19 April 2007

For two-letter codes and other abbreviations, refer to the "Guidance Notes on Codes and Abbreviations" appearing at the beginning of each regular issue of the PCT Gazette.

INTERNATIONAL SEARCH REPORT

International application No.
PCT/IB2006/001493

A. CLASSIFICATION OF SUBJECT MATTER

Int. Cl.

C05F 17/02 (2006.01) ***C05F 9/02*** (2006.01)

According to International Patent Classification (IPC) or to both national classification and IPC

B. FIELDS SEARCHED

Minimum documentation searched (classification system followed by classification symbols)
IPC

Documentation searched other than minimum documentation to the extent that such documents are included in the fields searched

Electronic data base consulted during the international search (name of data base and, where practicable, search terms used)
QUESTEL ORBIT (File WPAT) Key words based on: Tumbler, Rotate, Flies, Worm, Insect, Woodlice, Slater, Maggot, Meat

C. DOCUMENTS CONSIDERED TO BE RELEVANT

Category*	Citation of document, with indication, where appropriate, of the relevant passages	Relevant to claim No.
A	AU 14981/01 (780372) B2 (HADDOCK HOLDINGS PTY. LTD.) 17 March 2005 See page 4 lines 8 to 20, Claims and Figures.	1 – 23
A	WO 2002/020428 A1 (ASO HOLDINGS PTY. LTD.) 14 March 2002 See page 2 lines 10 to 21, Claim 1, and Figures 1 and 2	1 – 23
A	Derwent Abstract Accession No. 94-015435/02, Class Q35, TW 215070 A (MITSUI KINZOKU STAFF SERVICE KK) 21 October 1993 See whole abstract	1 – 23

☐ Further documents are listed in the continuation of Box C ☒ See patent family annex

* Special categories of cited documents:

"A" document defining the general state of the art which is not considered to be of particular relevance

"E" earlier application or patent but published on or after the international filing date

"L" document which may throw doubts on priority claim(s) or which is cited to establish the publication date of another citation or other special reason (as specified)

"O" document referring to an oral disclosure, use, exhibition or other means

"P" document published prior to the international filing date but later than the priority date claimed

"T" later document published after the international filing date or priority date and not in conflict with the application but cited to understand the principle or theory underlying the invention

"X" document of particular relevance; the claimed invention cannot be considered novel or cannot be considered to involve an inventive step when the document is taken alone

"Y" document of particular relevance; the claimed invention cannot be considered to involve an inventive step when the document is combined with one or more other such documents, such combination being obvious to a person skilled in the art

"&" document member of the same patent family

Date of the actual completion of the international search	Date of mailing of the international search report
04 September 2006	15 FEB 2007
Name and mailing address of the ISA/AU AUSTRALIAN PATENT OFFICE PO BOX 200, WODEN ACT 2606, AUSTRALIA E-mail address: pct@ipaustralia.gov.au Facsimile No. (02) 6285 3929	Authorized officer **George D. Hearder** Telephone No : (02) 6283 2553

INTERNATIONAL SEARCH REPORT

International application No.
PCT/IB2006/001493

This Annex lists the known "A" publication level patent family members relating to the patent documents cited in the above-mentioned international search report. The Australian Patent Office is in no way liable for these particulars which are merely given for the purpose of information.

Patent Document Cited in Search Report		Patent Family Member					
AU	14981/01	AU	14981/01	GB	2359504		
WO	2002/020428	AU	87366/01	CA	2420853	CN	1606536
		EP	1332122	NZ	524644	NZ	534628
		US	2004029262	ZA	200302156		

Due to data integration issues this family listing may not include 10 digit Australian applications filed since May 2001.

END OF ANNEX