US 20060053543A1

(19) **United States**

(12) **Patent Application Publication** (10) **Pub. No.: US 2006/0053543 A1**

Vargas et al. (43) **Pub. Date: Mar. 16, 2006**

(54) **WATER RECREATIONAL APPARATUS WITH POWERED COVER**

(76) Inventors: **Pedro Vargas**, Pomona, CA (US); **Casey Loyd**, Pomona, CA (US)

Correspondence Address:
SHELDON & MAK, INC
225 SOUTH LAKE AVENUE
9TH FLOOR
PASADENA, CA 91101 (US)

(21) Appl. No.: **11/231,096**

(22) Filed: **Sep. 19, 2005**

Related U.S. Application Data

(63) Continuation-in-part of application No. 10/353,134, filed on Jan. 27, 2003, now abandoned.

Publication Classification

(51) **Int. Cl.**
E04H 4/00 (2006.01)

(52) **U.S. Cl.** **4/498**

(57) **ABSTRACT**

A water recreational apparatus has a water basin combination, a cover for covering the water basin combination and a cover removal combination. The cover removal combination includes a cover attachment arm which is rotatably attached to the exterior of the water basin combination. The cover attachment arm is adapted so that the rotation of the cover attachment arm about its attachment axes to the water basin combination alternatively moves the cover between a closed position and an open position. Drive means, such as electric motors, are provided for powering the cover attachment arm about its attachment axes so as to open and close the cover.

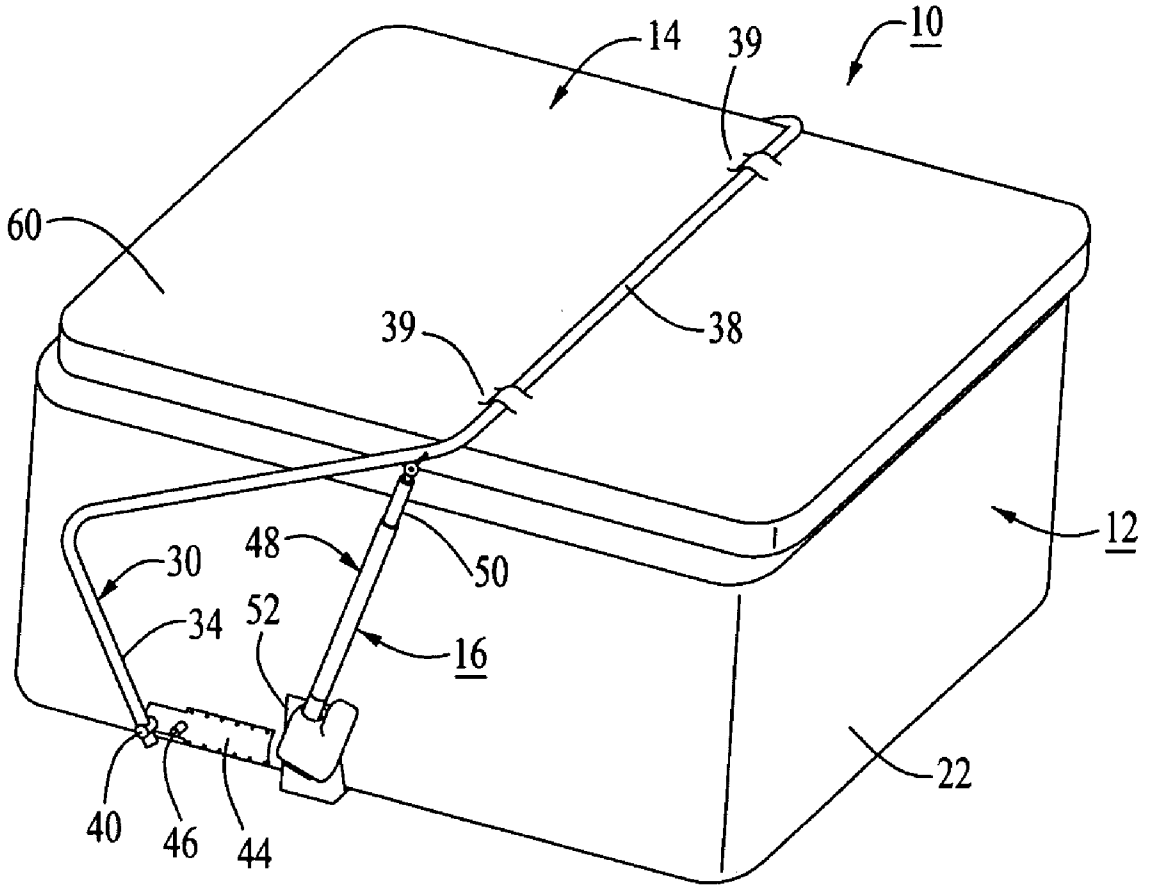

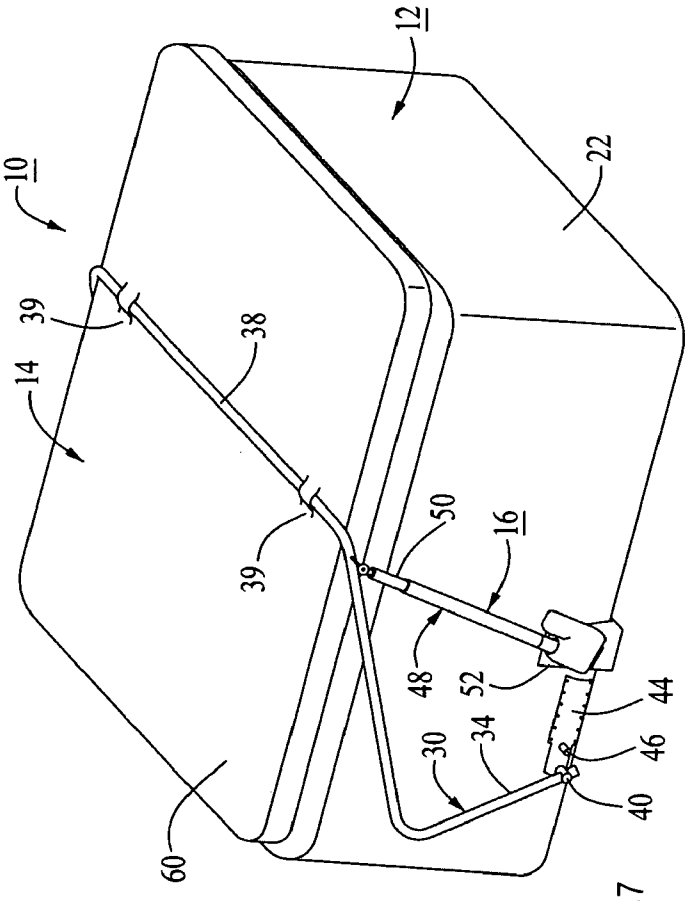
10
12
14
16
22
38
39
39
48
50
52
30
34
40
44
46
60

FIG. 1

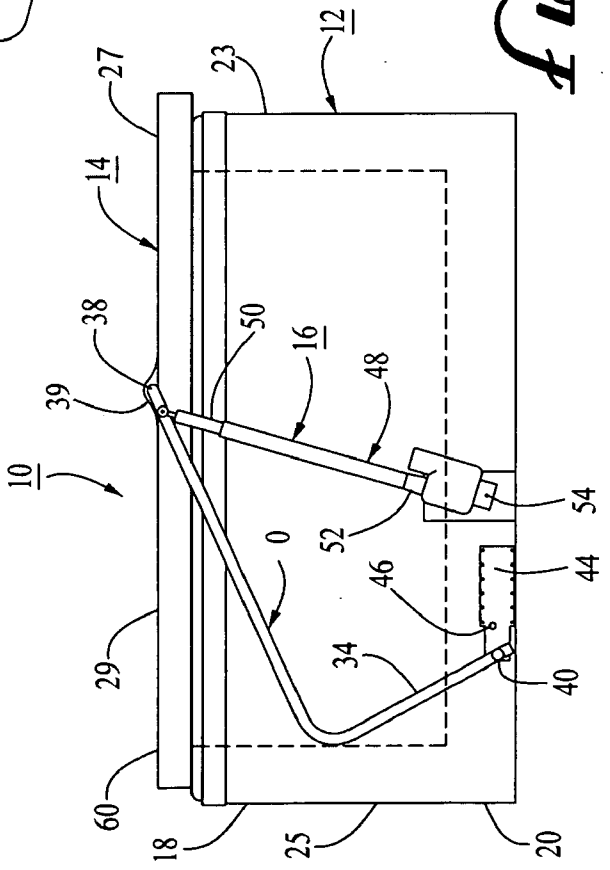
10
12
14
16
18
20
23
25
27
29
38
39
40
44
46
48
50
52
54
60

FIG. 2

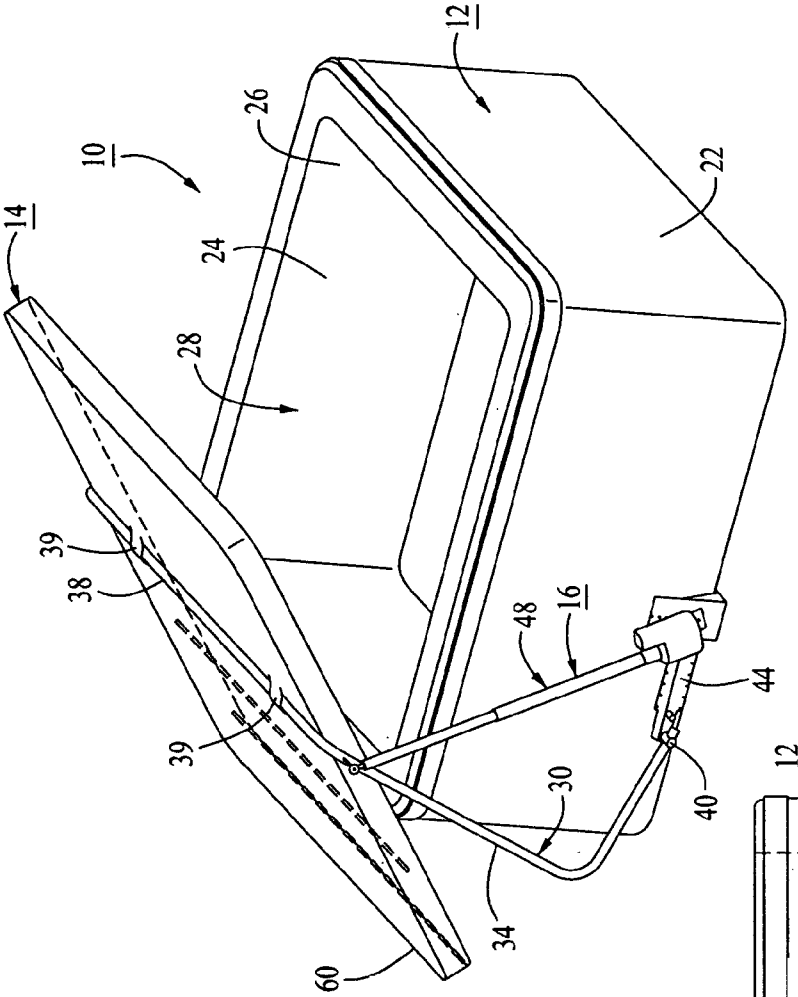
12
26
10
22
14
24
28
39
38
48
16
44
39
40
30
34
60

FIG. 3

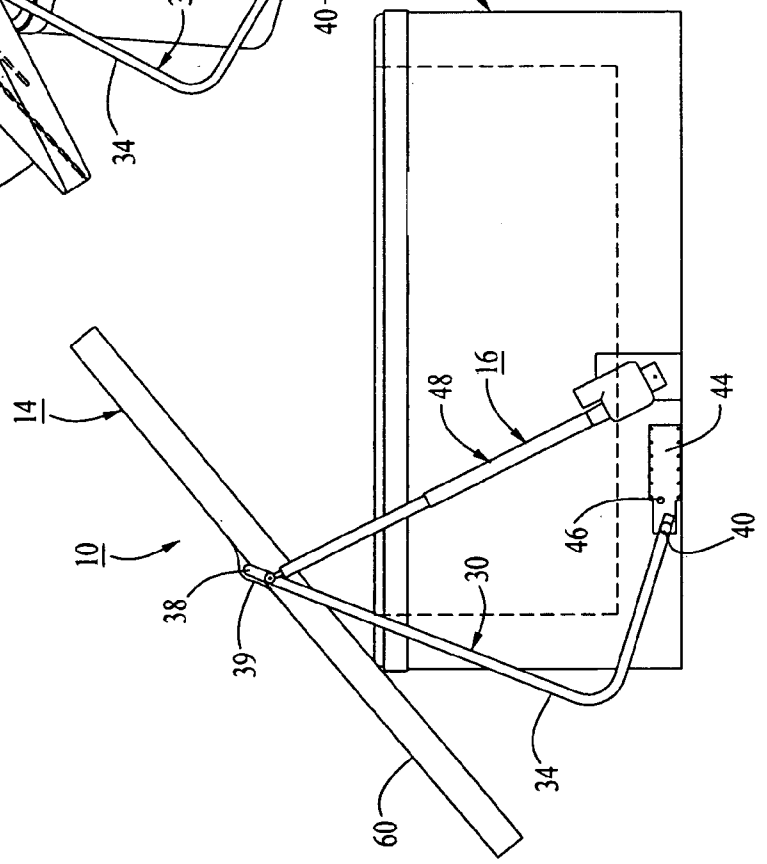
12
14
48
16
44
10
46
40
38
30
39
34
60

FIG. 4

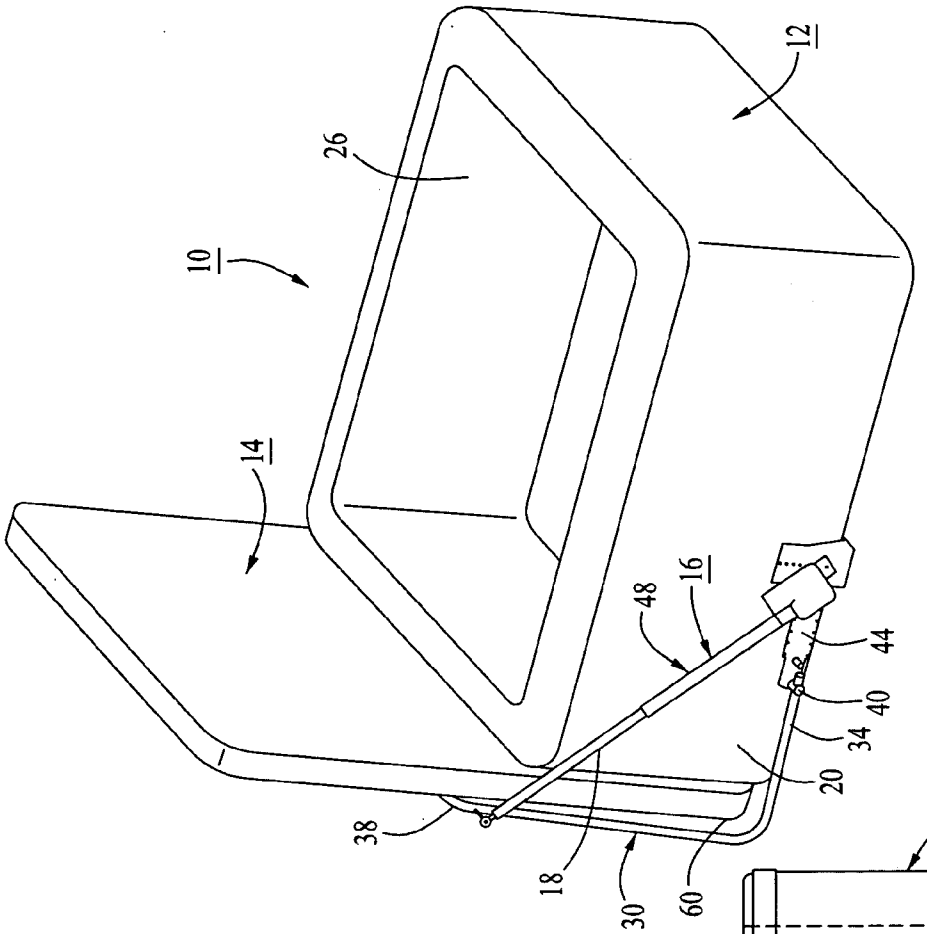
12
26
10
14
16
48
44
40
34
20
38
18
30
60

FIG. 5

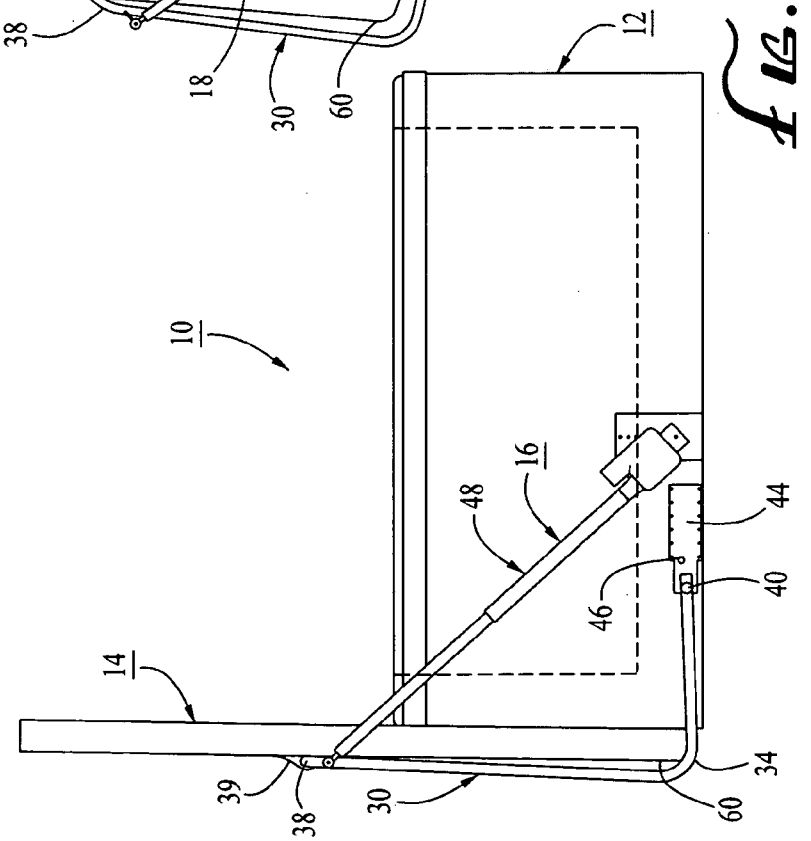
12
10
16
48
44
46
40
14
39
38
30
34
60

FIG. 6

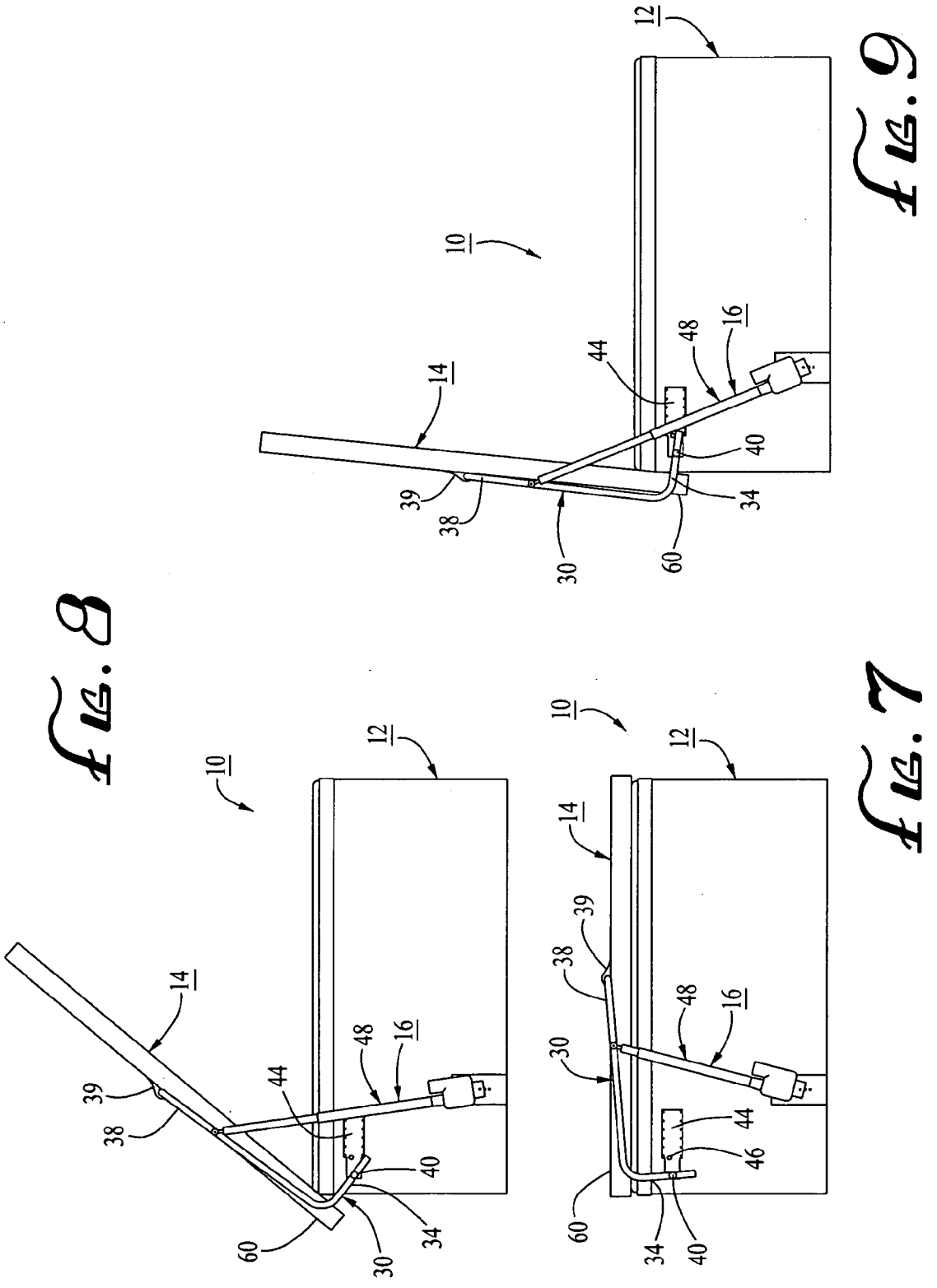

Fig. 7

Fig. 8

Fig. 9

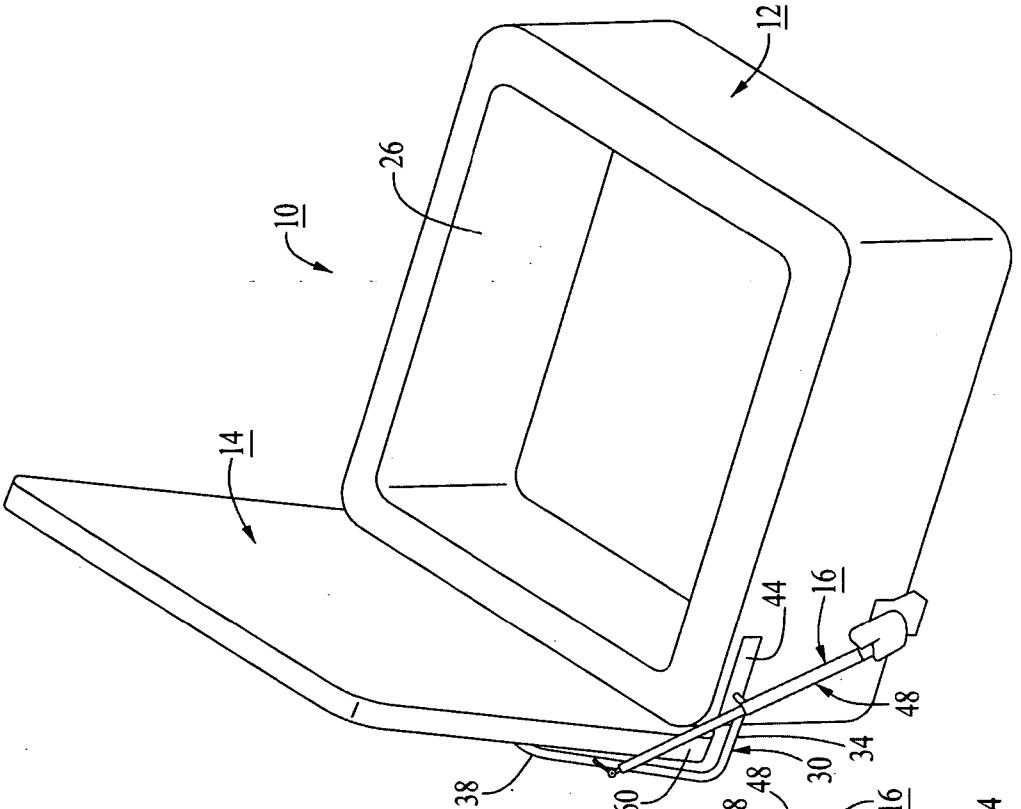
12
26
10
14
16
44
48
34
30
38
60

Fig. 11

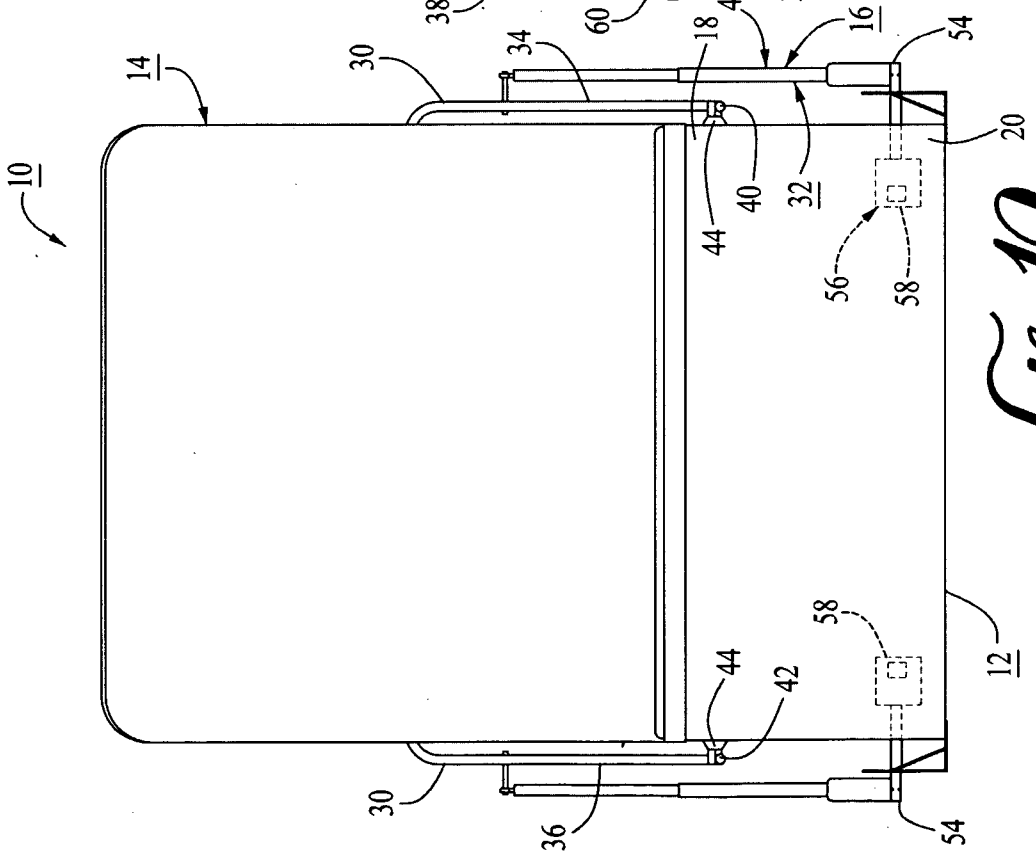
10
14
30
34
18
48
16
54
20
44
40
32
56
58
12
42
36

Fig. 10

Fig. 12

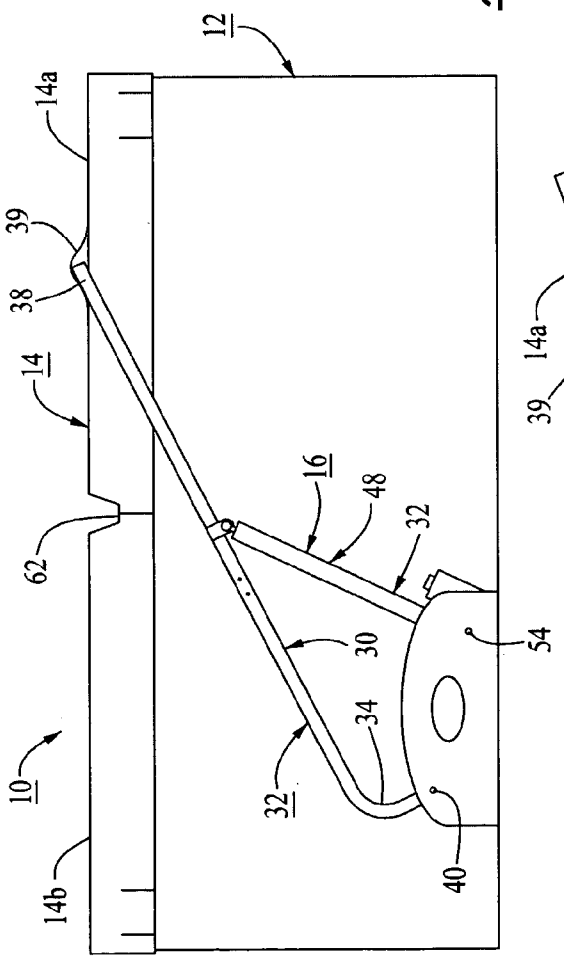
12
14a
39
38
14
16
48
32
62
30
54
34
10
32
40
14b

Fig. 13

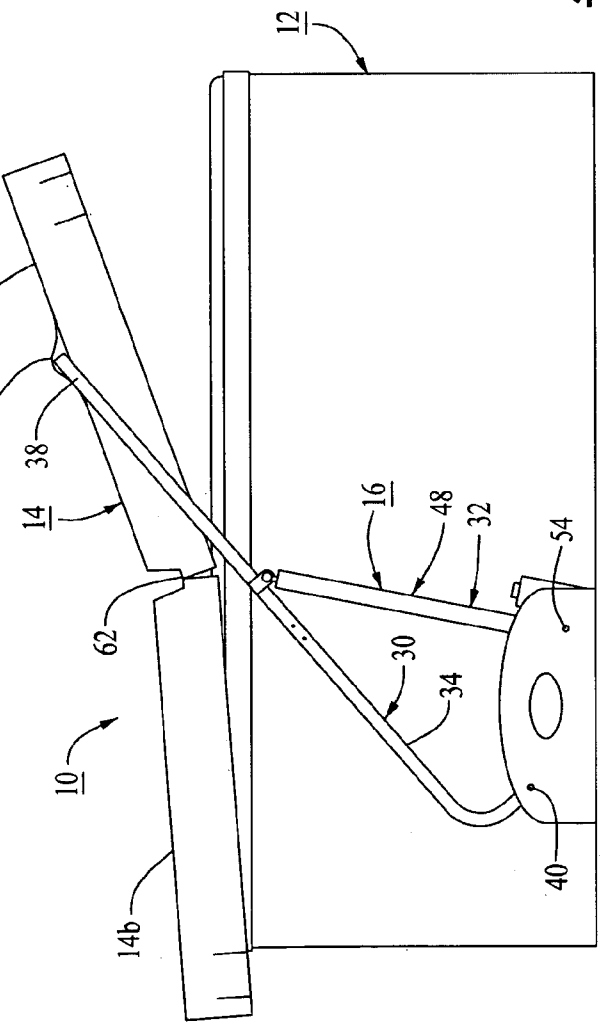
12
14a
39
38
14
16
48
32
54
62
30
34
10
40
14b

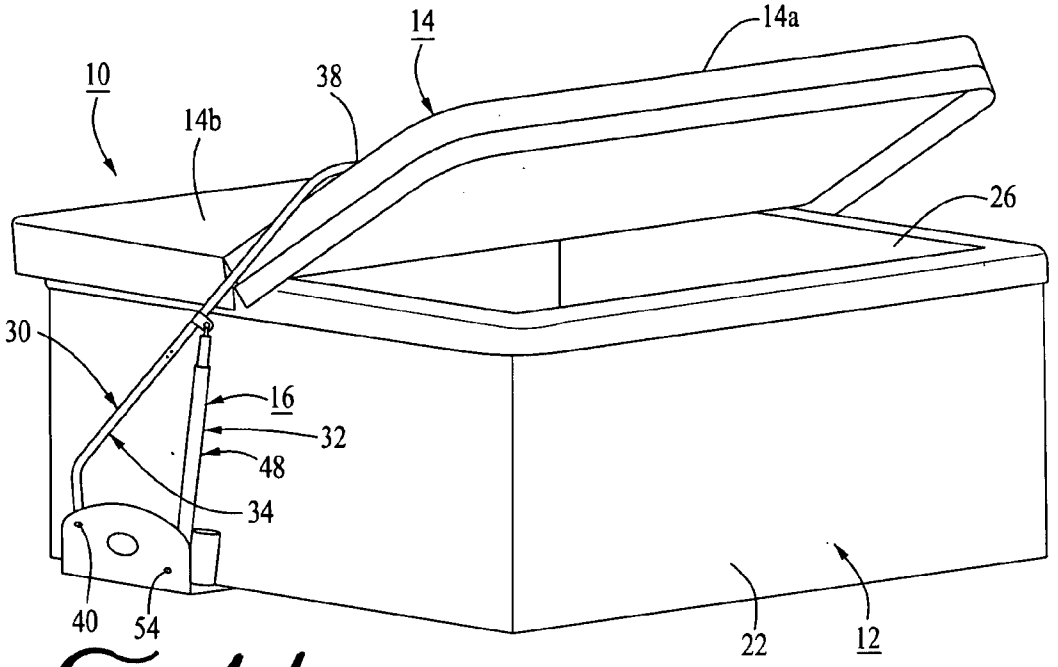
14
14a
10
38
14b
26
30
16
32
48
34
40
54
22
12

FIG. 14

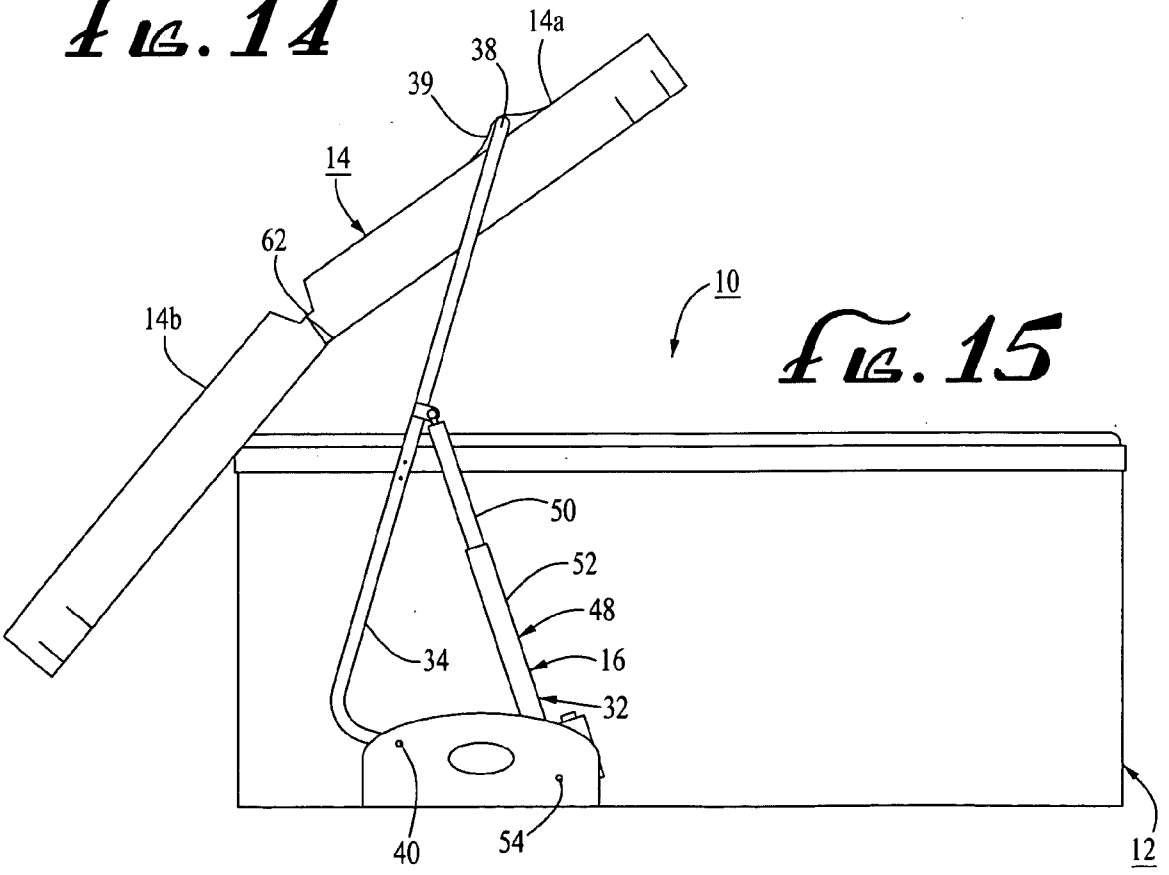
14a
38
39
14
62
10
14b
50
52
48
16
32
34
40
54
12

FIG. 15

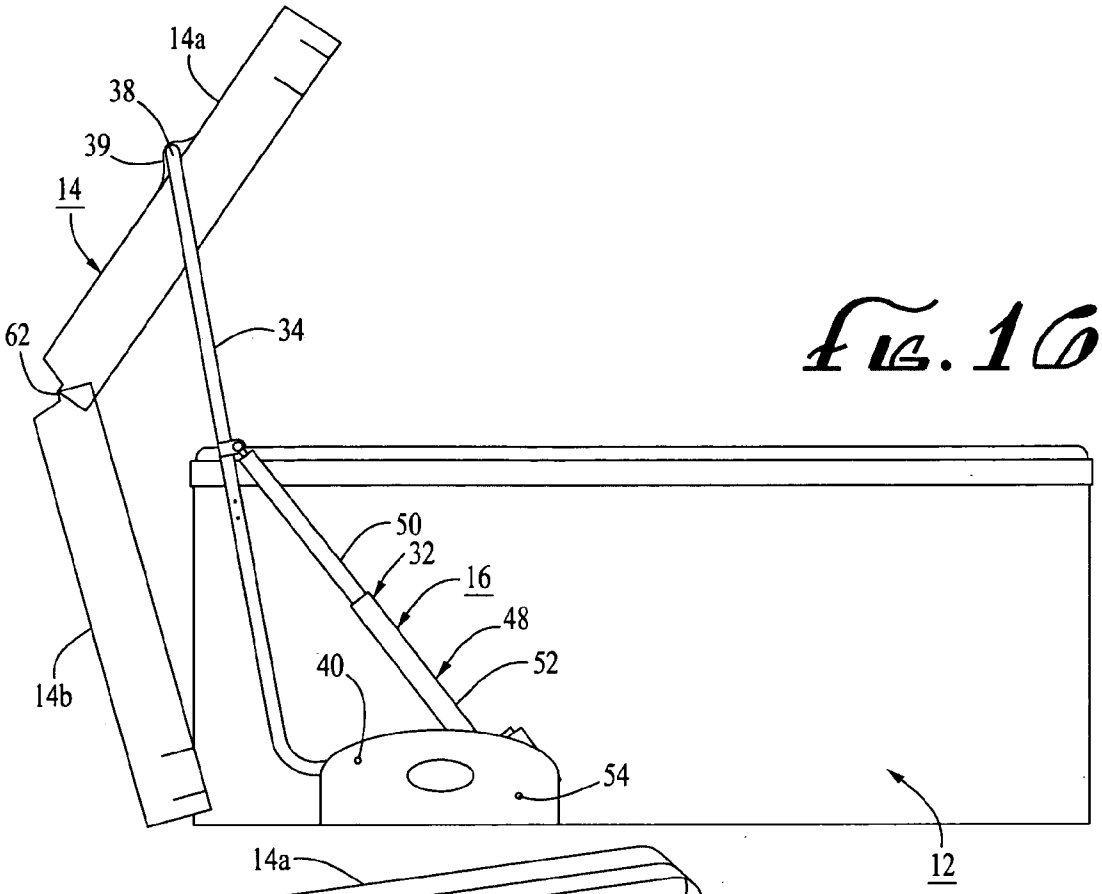
14a
38
39
14
62
34
50
32
16
48
52
40
14b
54
12

FIG. 16

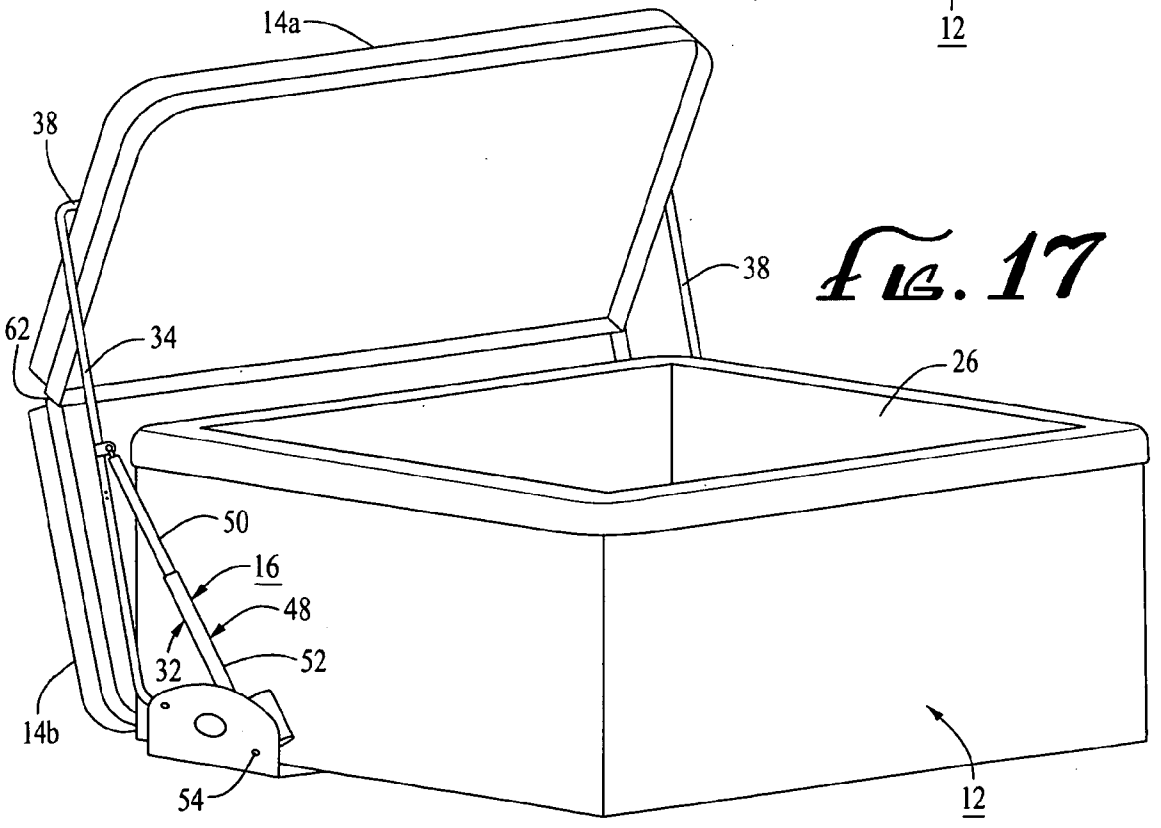
14a
38
38
62
34
26
50
16
48
32
52
14b
54
12

FIG. 17

WATER RECREATIONAL APPARATUS WITH POWERED COVER

RELATED APPLICATION

[0001] This application is a continuation-in-part of U.S. patent application Ser. No. 10/353,134, filed Jan. 27, 2003, the contents of which are incorporated in this disclosure by reference in their entirety.

FIELD OF THE INVENTION

[0002] This invention relates generally to water recreational apparatuses, such as portable spas and hot tubs and, more specifically, to such water recreational apparatuses having removable covers.

BACKGROUND OF THE INVENTION

[0003] Water recreational apparatuses, such as portable spas and hot tubs, have become very popular. One problem with the use of such water recreational apparatuses is that they tend to accumulate dust, fallen leaves and other debris when not in use. Another problem with such water recreational apparatuses is that young children can climb into such apparatuses when they are not in use and either be injured or drowned.

[0004] In an attempt to solve these problems, some spas are sold with a removable cover. Unfortunately, the use of such removable covers is not wholly satisfactory. One problem with the use of portable covers is that they are heavy and awkward to install and remove. Another problem with removable covers is that, once removed, they are difficult to store. If stored flat, they take up a great deal of area and are difficult and awkward to lift up again. If stored on end, they are easily blown over by gusts of wind.

[0005] A third problem with such portable covers is that young children can sometimes manage to push the cover away from a water recreational apparatus when it is not in use and become injured or drowned within the water recreational apparatus.

[0006] Accordingly, there is a need for a water recreational apparatus which avoids these problems in the prior art. The invention satisfies this need.

SUMMARY OF THE INVENTION

[0007] The invention is a water recreational apparatus comprising a water basin combination, a cover for covering the water basin combination and a cover removal combination. The cover removal combination comprises (a) a cover attachment arm having a first end and a second end, the first end of the cover attachment arm being attached to the cover and the second end of the cover attachment arm being rotatably attached at an attachment arm axis point to the exterior of the water basin combination, the cover attachment arm being sized and dimensioned so that the rotation of the second end of the cover attachment arm about the attachment arm axis point moves the cover from (1) a closed position wherein the cover covers the top opening of the water basin combination and (2) an open position wherein the cover does not cover the top opening of the water basin combination, and (b) drive means for rotating the cover attachment arm about the attachment arm axis points such that the cover is alternatively moved between its open position and its closed position.

DESCRIPTION OF THE DRAWINGS

[0008] These and other features, aspects and advantages of the present invention will become better understood with reference to the following description, appended claims and accompanying drawings where:

[0009] **FIG. 1** is a perspective view of a first embodiment of a water recreational apparatus having features of the invention;

[0010] **FIG. 2** is a side view of the water recreational apparatus illustrated in **FIG. 1**;

[0011] **FIG. 3** is a perspective view of the water recreational apparatus illustrated in **FIG. 1** shown with the cover partially open;

[0012] **FIG. 4** is a side view of the water recreational apparatus illustrated in **FIG. 3**;

[0013] **FIG. 5** is a perspective view of the water recreational apparatus illustrated in **FIG. 1** showing the cover fully open;

[0014] **FIG. 6** is a side view of the water recreational apparatus illustrated in **FIG. 5**;

[0015] **FIG. 7** is a side view of a second water recreational apparatus having features of the invention;

[0016] **FIG. 8** is a side view of the water recreational apparatus illustrated in **FIG. 7**, shown with the cover partially open;

[0017] **FIG. 9** is a side view of the water recreational apparatus illustrated in **FIG. 8**, shown with the cover fully open;

[0018] **FIG. 10** is a front view of the water recreational apparatus illustrated in **FIG. 9**;

[0019] **FIG. 11** is a perspective view of the water recreational apparatus illustrated in **FIG. 9**;

[0020] **FIG. 12** is a side view of a third water recreational apparatus having features of the invention, showing a cover in the closed position;

[0021] **FIG. 13** is another side view of the embodiment illustrated in **FIG. 12**, the cover being shown partially opened;

[0022] **FIG. 14** is a perspective view of the water recreational apparatus illustrated in **FIG. 13**;

[0023] **FIG. 15** is another side view of the water recreational apparatus illustrated in **FIG. 12**, shown with the cover partially removed;

[0024] **FIG. 16** is another side view of the water recreational apparatus illustrated in **FIG. 12**, shown with the cover in the fully opened position; and

[0025] **FIG. 17** is a perspective view of the water recreational apparatus illustrated in **FIG. 16**.

DETAILED DESCRIPTION

[0026] The following discussion describes in detail one embodiment of the invention and several variations of that

embodiment. This discussion should not be construed, however, as limiting the invention to those particular embodiments. Practitioners skilled in the art will recognize numerous other embodiments as well.

[0027] The invention is a water recreational apparatus **10** comprising (i) a water basin combination **12**, (ii) a cover **14**, and (iii) a unique cover removal combination **16**.

[0028] The water recreational apparatus **10** can be a spa, a hot tub, a small above-ground pool or similar apparatus.

[0029] The water basin combination **12** has an upper portion **18**, a lower portion **20**, an exterior **22**, an interior **24**, a forward end **23**, a rearward end **25** and a top opening **26**. The water basin combination **12** comprises a water basin **28** of sufficient size and dimension to allow a human being to be partially submerged in water disposed within the water basin **28** when the human being is seated within the water basin **28**. The water basin combination **12** can also comprise a spa surround (not shown) which encloses the exterior of the water basin **28**. The spa surround is typically constructed of wood or similar construction material.

[0030] The cover **14** is sized and dimensioned to close off the top opening **26** in the water basin combination **12** from dirt and other debris when the water basin combination **12** is not in use. The cover **14** has a forward end **27** and a rearward end **29**. In a typical embodiment, the cover **14** is made from a foamed plastic material, although other materials can also be used. In one typical embodiment, the cover **14** is made with a core of 1½ pounds per cubic inch expanded polystyrene foam covered with a marine grade vinyl with a polyester backing. (As used in this application, the term "expanded polystyrene" means an expanded mixture of polystyrene and styrene copolymers.) The marine grade vinyl on the underside of the core can incorporate a heat reflective material to help preserve heat within the water in the basin **28**.

[0031] The unique cover removal combination **16** comprises a cover attachment arm **30** attached to the cover **14** and drive means **32** for rotating the cover attachment arm **30**.

[0032] The cover attachment arm **30** has a first end **34**, a second end **36** and a central portion **38**. The central portion **38** of the cover attachment arm **30** is attached to the cover **14** proximate to the forward end **27** of the cover **14**, that is, the attachment arm **30** is attached to the cover **14** at a location more proximate to the forward end **27** of the cover **14** than to the rearward end **29** of the cover **14**. In a typical embodiment, the central portion **38** of the cover attachment arm **30** is attached to the cover **14** by being disposed through a loop of the vinyl material **39** covering the foamed core of the cover **14**. Loops **39** of the vinyl material covering the foamed core of the cover **14** are shown in the drawings as examples only. No claim is made to any particular design feature of the loops of vinyl material **39** illustrated in the drawings. Typically, the central portion **38** of the cover attachment arm **30** runs the complete width of the cover **14**. The cover attachment-arm **30** is typically made from a metal such as aluminum or steel tubing. Preferably, the material of the cover attachment arm **30** is chosen to minimize the overall weight of the cover attachment arm **30** while providing sufficient strength to support the cover **14**.

[0033] The first end **34** of the cover attachment arm **30** is rotatably attached at a first attachment arm axis point **40** to the exterior **22** of the water basin combination **12** proximate to the rearward end **25** of the water basin combination **12**, that is, the attachment arm axis point **40** is more proximate to the rearward end **25** of the water basin combination **12** than the forward end **23** of the water basin combination **12**. The second end **36** of the cover attachment arm **30** is rotatably attached at a second attachment arm axis point **42** on the exterior **22** of the water basin combination **12**, at a location opposite the first attachment arm axis point **40**. In a typical embodiment, the second end **36** of the cover attachment arm **30** is the mirror image of the first end **34** of the cover attachment arm **30**.

[0034] The cover attachment arm **30** is sized and dimensioned so that the rotation of the first and second ends **34** and **36** of the cover attachment arm **30** about their respective attachment arm axis points **40** and **42** moves the cover **14** from (1) a closed position wherein the cover **14** covers the top opening **26** of the water basin combination **12**, and (2) an open position wherein the cover **14** does not cover the top opening **26** of the water basin combination **12**.

[0035] In the embodiment illustrated in the drawings, both of the attachment arm axis points **40** and **42** are provided by metal hinges **44** attached to the exterior **22** of the water basin combination **12**. In the embodiment illustrated in **FIGS. 1-11**, the hinges **44** include a stop **46**, typically comprising a metallic knob covered with rubber or soft plastic. The stop **46** can be positioned as illustrated in **FIGS. 7-11**, such that one or both of the two ends **34** or **36** of the cover attachment arm **30** contacts the stop **46** when the cover **14** is moved to its open position. In this way, the stop **46** prevents the rotation of the cover **14** beyond its open position. In a typical embodiment employing a stop **46**, the hinges **44** on both sides of the exterior **22** of the water basin combination **12** comprise a stop **46** and both ends **34** and **36** of the cover attachment arm **30** are configured to contact one of the stops **46** when the cover **14** is moved to its open position. Instead of using a stop **46** to prevent excessive rotation of the cover **14**, appropriately located limit switches can be used.

[0036] In the embodiment illustrated in the drawings, the drive means **32** comprises a pair of drive arms **48** disposed on opposite sides of the water basin combination **12**. Each drive arm **48** has a first end **50** and a second end **52**. The first end **50** of each drive arm **48** is attached to the cover attachment arm **30** and the second end **52** of each drive arm **48** is rotatably attached to the exterior **22** of the water basin combination **12** about a drive arm axis point **54**. In the embodiment illustrated in the drawings, the first end **50** and the second end **52** are telescopically slidable with respect to one another.

[0037] The drive means **32** further comprises power means **56** for extending and contracting the first ends **50** with respect to their respective second ends **52** such that the cover **14** is alternatively moved between its open position and its closed position. In the embodiment illustrated in the drawings each drive arm **48** is substantially linear.

[0038] In a typical embodiment, the power means **56** comprises a pair of synchronized electric motors **58**, one attached to each of the drive arms **48** and configured to rotate a threaded cylinder disposed within the second end **52**. The threaded cylinder within the second end **52** is geared to a threaded cylinder within the first end **50** such that, when the threaded cylinder within the second end **52** is rotated, the

threaded cylinder within the first end **50** is rotated, thus causing the first end **50** to either move away from the second end **52** or move towards the second end **52** (depending upon the direction of rotation of the threaded cylinder within the second end **52**). Typically, the threaded cylinder within the first end **50** is externally threaded and the threaded cylinder within the second end **52** is internally threaded. The threaded cylinder within the first end **50** is threadedly disposed within the threaded cylinder within the second end **52**, such that the rotation of the threaded cylinder within the second end **52** causes the threaded cylinder within the first end **50** to either move away from the second end **52** or move towards the second end **52**. The movement of the threaded cylinder within the first end **50** acts to extend or contract the first end **50** with respect to the second end **52** to move the cover **14** alternatively between its open position and its closed position. An off-the-shelf drive means, such as described immediately above, can be purchased from Fasco Actuators of Easton Rapids, Mich. as C-Band Satellite Linear Actuators.

[**0039**] Other drive means **32** can be used in the invention. For example, drive means **32** comprising oppositely disposed hydraulic cylinders can also be used.

[**0040**] Like the cover attachment arm **30**, the two drive arms **48** are typically made from a metal. Each drive arm **48** is attached so as to give it sufficient strength to repeatedly move the cover **14** between its open position and its closed position.

[**0041**] In the embodiment illustrated in **FIGS. 1-6**, the cover attachment arm **30** is configured such that, when the cover **14** is in its open position, the rear periphery **60** of the cover **14** is proximate to the lower portion **20** of the exterior **22** of the water basin combination **12**. In the embodiment illustrated in **FIGS. 7-11**, on the other hand, the cover attachment arm **30** is configured such that the rear periphery **60** of the cover **14** is proximate to the upper portion **18** of the exterior **22** of the water basin combination **12** when the cover **14** is in its open position.

[**0042**] In the embodiment illustrated in **FIGS. 1-6**, the cover attachment arm **30** is configured such that, when the cover **14** is in its open position, the rear periphery **60** of the cover **14** is proximate to the upper portion **18** of the exterior **22** of the water basin combination **12**. In the embodiment illustrated in **FIGS. 7-11**, on the other hand, the cover attachment arm **30** is configured such that the rear periphery **60** of the cover **14** is proximate to the lower portion **20** of the exterior **22** of the water basin combination **12** when the cover **14** is in its open position.

[**0043**] **FIGS. 12-17** illustrate yet another embodiment of the invention **10**. In the embodiment illustrated in **FIGS. 12-17**, the cover **14** is provided by two cover portions **14***a* and **14***b* which are hinged along a transverse hinge **62**. The transverse hinge **62** is typically a fabric hinge, most typically provided by the same vinyl covering material that covers the core material of the cover portions **14***a* and **14***b*. In the embodiment illustrated in **FIGS. 12-17**, a drive means **32** comprises a pair of drive arms **48** disposed on opposite sides of the water basin combination **12**. Each drive arm **48** has a first end **50** and a second arm **52**. The first end **50** of each drive arm **48** is attached to the cover attachment arm **30** and the second end **52** of each drive arm **48** is rotatably attached to the exterior **22** of the water basin combination **12** about a drive arm axis point **54**. In the embodiment illustrated in **FIGS. 12-17**, the first end **50** and the second end **52** are telescopically slideable with respect to one another.

[**0044**] The invention provides an effective and inexpensive method of covering and uncovering a water recreational apparatus by convenient powerized means. Because the opening of the cover is accomplished by powerized means, the cover cannot be inadvertently blown off by the wind. Moreover, if the control switches for the invention are maintained within a locked control box, the cover cannot be removed by small children or other trespassing individuals or animals.

EXAMPLE

[**0045**] In one example of the invention, the water recreational apparatus is a portable spa. The water recreational apparatus comprises a water basin combination which includes a water basin enclosed within a spa surround. The water basin combination is 40 inches in height, 96 inches in length and 96 inches in width. The top opening of the water basin combination is generally 96 inches by 96 inches. The cover is made with a foam core surrounded by a marine vinyl covering and is 5 inches in thickness and weighs about 45 pounds. The water basin holds approximately 500 gallons of water. The spa surround is made of pine and comprises four vertical walls surrounding the water basin.

[**0046**] The cover attachment arm is hollow and is made from steel and has an outside diameter of 1½ inches and is ½ inch thick.

[**0047**] The drive means is provided by a pair of synchronized electric motors. Each electric motor is rated at 1/15 horsepower. The drive means also comprises a pair of linear drive arms, each drive arm being hollow and made from steel with an outside diameter of 1 inch and a thickness of ⅛ inch.

[**0048**] Having thus described the invention, it should be apparent that numerous structural modifications and adaptations may be resorted to without departing from the scope and fair meaning of the instant invention as set forth hereinabove and as described hereinbelow by the claims.

What is claimed is:

1. A water recreational apparatus comprising (i) a water basin combination having a forward end, a rearward end, an exterior, an interior and a top opening (ii) a cover for covering the top opening, the cover having a forward end and a rearward end, and (iii) a cover removal combination, the cover removal combination comprising:

(a) a cover attachment arm having a first end, a second end and a central portion, the central portion of the cover attachment arm being attached to the cover proximate to the forward end of the cover, the first end of the cover attachment arm and the second end of the cover attachment arm being rotatably attached at respective attachment arm axis points to opposite sides of the exterior of the water basin combination proximate to the rearward end of the water basin combination, the cover attachment arm being sized and dimensioned so that the rotation of the first and second ends of the cover attachment arm about their respective attachment arm axis points moves the cover from (1) a closed position wherein the cover covers the top opening of the water

basin combination and (2) an open position wherein the cover does not cover the top opening of the water basin combination; and

(b) drive means comprising a motor for rotating the cover attachment arm about its attachment arm axis points such that the cover is alternatively moved between its open position and its closed position.

2. The water recreational apparatus of claim 1 wherein the drive means comprises a pair of drive arms each having a first end and a second end, the first end of each drive arm being attached to the cover attachment arm and the second end of each drive arm being rotatably attached to the exterior of the water basin combination about a drive arm axis point, the drive arm axis points for the two drive arms being disposed on opposite sides of the exterior of the water basin combination.

3. The water recreational apparatus of claim 2 wherein each drive arm is substantially linear.

4. The water recreational apparatus of claim 1 wherein the drive means comprises a pair of electric motors.

5. The water recreational apparatus of claim 1 wherein the exterior of the water basin has an upper portion and a lower portion, wherein the cover has a cover periphery and wherein, when the cover is in its open position, the cover periphery is proximal to the lower portion of the exterior of the water basin combination.

6. The water recreational apparatus of claim 1 wherein the cover is provided by a pair of cover portions which are hinged together.

7. A water recreational apparatus comprising (i) a water basin combination having a forward end, a rearward end, an exterior, an interior and a top opening, (ii) a cover for covering the top opening, the cover having a forward end and a rearward end, and (iii) a cover removal combination, the cover removal combination comprising:

(a) a cover attachment arm having a first end, a second end and a central portion, the central portion of the cover attachment arm being attached to the cover proximate to the forward end of the cover, the first end of the cover attachment arm and the second end of the cover attachment arm being rotatably attached at respective attachment arm axis points to opposite sides of the exterior of the water basin combination proximate to the rearward end of the water basin combination, the cover attachment arm being sized and dimensioned so that the rotation of the first and second ends of the cover attachment arm about their respective attachment arm axis points moves the cover from (1) a closed position wherein the cover covers the top opening of the water basin combination and (2) an open position wherein the cover does not cover the top opening of the water basin combination; and

(b) drive means for rotating the cover attachment arm about its attachment arm axis points such that the cover is alternatively moved between its open position and its closed position, the drive means comprising a pair of drive arms each having a first end and a second end, the first end of each drive arm being attached to the cover attachment arm and the second end of each drive arm being rotatably attached to the exterior of the water basin combination about a drive arm axis point, the drive arm axis points for the two drive arms being disposed on opposite sides of the exterior of the water basin combination, the drive means further comprising a pair of electric motors for telescopically extending the drive arms such that the cover can be alternatively moved between its open position and its closed position.

8. The water recreational apparatus of claim 7 wherein the exterior of the water basin has an upper portion and a lower portion, wherein the cover has a cover periphery and wherein, when the cover is in its open position, the cover periphery is proximate to the lower portion of the exterior of the water basin combination.

9. The water recreational apparatus of claim 7 wherein the cover is provided by a pair of cover portions which are hinged together.

10. A cover removal combination for removing a cover from a water recreational apparatus wherein the water recreational apparatus comprises (i) a water basin combination having a forward end, a rearward end, an exterior, an interior and a top opening and (ii) a cover for covering the top opening, the cover having a forward end and a rearward end, the cover removal combination comprising:

(a) a cover attachment arm having a first end, a second end and a central portion, the central portion of the cover attachment arm being attachable to the cover proximate to the forward end of the cover, the first end of the cover attachment arm and the second end of the cover attachment arm being rotatably attachable at respective attachment arm axis points to opposite sides of the exterior of the water basin combination proximate to the rearward end of the water basin combination, the cover attachment arm being sized and dimensioned so that, when the ends of the cover attachment arm are attached to the exterior of the water basin combination and the central portion of the cover attachment arm is attached to the cover, the rotation of the first and second ends of the cover attachment arm about their respective attachment arm axis points moves the cover from (1) a closed position wherein the cover covers the top opening of the water basin combination and (2) an open position wherein the cover does not cover the top opening of the water basin combination; and

(b) drive means comprising a motor for rotating the cover attachment arm about its attachment arm axis points such that the cover can be alternatively moved between its open position and its closed position.

11. The cover removal combination of claim 10 wherein the drive means comprises a pair of drive arms each having a first end and a second end, the first end of each drive arm being attachable to the cover attachment arm and the second end of each drive arm being rotatably attachable to the exterior of the water basin combination about a drive arm axis point.

12. The cover removal combination of claim 10 wherein the drive means comprises a pair of electric motors.

13. The cover removal combination of claim 10 wherein the exterior of the water basin has an upper portion and a lower portion, wherein the cover has a cover periphery and wherein, when the cover removal combination is attached to a water basin combination and the cover is in its open position, the cover periphery can be proximate to the lower portion of the exterior of the water basin combination.

14. The water recreational apparatus of claim 10 wherein the cover is provided by a pair of cover portions which are hinged together.

* * * * *