PCT WORLD INTELLECTUAL PROPERTY ORGANIZATION
International Bureau

INTERNATIONAL APPLICATION PUBLISHED UNDER THE PATENT COOPERATION TREATY (PCT)

(51) International Patent Classification 4 : B65D 1/02, B29C 33/00, 45/03 B29C 45/26

A1

(11) International Publication Number: WO 88/ 05404

(43) International Publication Date: 28 July 1988 (28.07.88)

(21) International Application Number: PCT/US88/00212

(22) International Filing Date: 19 January 1988 (19.01.88)

(31) Priority Application Numbers: 007,463
027,511

(32) Priority Dates: 26 January 1987 (26.01.87)
18 March 1987 (18.03.87)

(33) Priority Country: US

(71) Applicant: ACEBO COMPANY [US/US]; 7910 Ivanhoe Avenue, Suite 203, La Jolla, CA 92037 (US).

(72) Inventor: SORENSEN, Jens, Ole ; P.O. Box 2274, Rancho Santa Fe, CA 92067 (US).

(74) Agent: CALLAN, Edward; 3033 Science Park Road, San Diego, CA 92121 (US).

(81) Designated States: AT (European patent), BE (European patent), CH (European patent), DE (European patent), FR (European patent), GB (European patent), IT (European patent), JP, LU (European patent), NL (European patent), SE (European patent).

Published
With international search report.
With amended claims and statement.

(54) Title: RIBBED PRODUCT, MOLD AND METHOD THEREFOR

(57) Abstract

Thin-walled plastic products often have poor wall-strenght. The mold, method and product of the inventions herein provide as a remedy, reinforcing ribs (43) on the bottom and side walls of the product. Mold-parts (10, 11) provide mold cavity (14) therebetween primary flow channels (23) and secondary channels (27) provide increased bottom strength and wall strength by forming regions (25) of increased bottom thickness and ribs (43) which reinforce the side-wall (41).

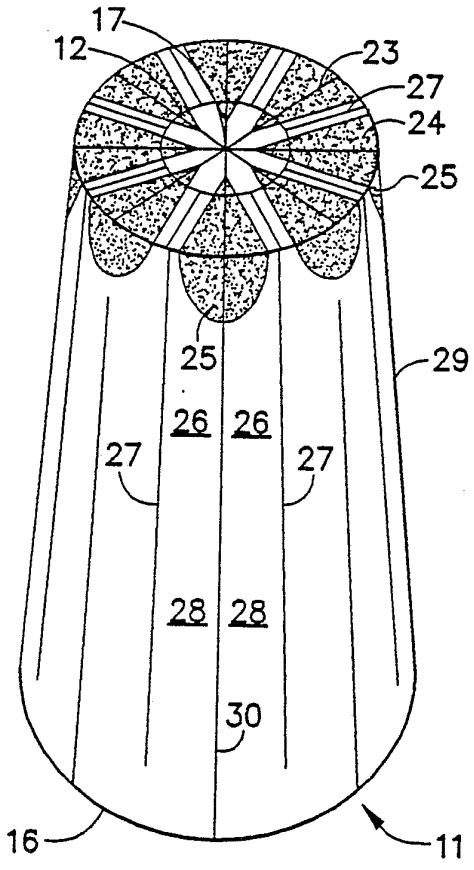

FOR THE PURPOSES OF INFORMATION ONLY

Codes used to identify States party to the PCT on the front pages of pamphlets publishing international applications under the PCT.

AT	Austria	**FR**	France	**ML**	Mali
AU	Australia	**GA**	Gabon	**MR**	Mauritania
BB	Barbados	**GB**	United Kingdom	**MW**	Malawi
BE	Belgium	**HU**	Hungary	**NL**	Netherlands
BG	Bulgaria	**IT**	Italy	**NO**	Norway
BJ	Benin	**JP**	Japan	**RO**	Romania
BR	Brazil	**KP**	Democratic People's Republic of Korea	**SD**	Sudan
CF	Central African Republic			**SE**	Sweden
CG	Congo	**KR**	Republic of Korea	**SN**	Senegal
CH	Switzerland	**LI**	Liechtenstein	**SU**	Soviet Union
CM	Cameroon	**LK**	Sri Lanka	**TD**	Chad
DE	Germany, Federal Republic of	**LU**	Luxembourg	**TG**	Togo
DK	Denmark	**MC**	Monaco	**US**	United States of America
FI	Finland	**MG**	Madagascar		

Ribbed Product, Mold And Method Therefor

BACKGROUND OF THE INVENTION

The present invention generally pertains to injection molding of thin-walled plastic products and is particularly directed to enhancing the strength of thin-walled plastic products.

A prior art mold for molding thin-walled plastic products having a thin-walled area includes a first mold part and a second mold part defining a mold cavity therebetween, encompassed by a parting line, for forming the plastic product, and further defining a gate for admitting injected molten plastic into the cavity. The mold parts define a thin cavity region for defining the thin-walled area of the plastic product; and first and second flow channels, defining opposite boundaries of the thin cavity region, and for directing the injected molten plastic from the gate into the thin cavity region, whereby the molten plastic directed from the first flow channel joins with the molten plastic directed from the second flow channel. A "flow channel" is defined as a portion of the mold cavity which directs the flow of molten plastic. Thin-walled plastic products made with such molds are structurally weak, especially in the regions where the molten plastic directed from

the first flow channel joins with the molten plastic directed from the second flow channel.

SUMMARY OF THE INVENTION

The present invention provides an improved mold and method for injection molding of thin-walled plastic products using a mold of the type described above.

The mold of the present invention is characterized by the mold parts further defining a meld chamber, which is a portion of the mold cavity that is thicker than the thin cavity region to enhance the melding of plastic flowing from different directions into and joining together in the meld chamber, wherein the thickest portion of the meld chamber is displaced from the gate. The meld chamber is located where molten plastic directed into the thin cavity region by the first flow channel joins molten plastic directed into the thin cavity region by the second flow channel, whereby the strength of the molded thin-walled plastic product is significantly enhanced, particularly in the region of the product defined by the meld chamber.

In a separate aspect of the present invention, the mold is characterized by the respective first and second flow channels being defined by depressions in both the first and second mold parts. This feature may reduce the stacking height of thin-walled plastic products made with such a mold.

The method of the present invention for injection molding a plastic product having a thin-walled area, includes the steps of

(a) injecting molten plastic from a gate into a mold cavity defined by and positioned between a first mold part and a second mold part and encompassed by a parting line, for forming the product; wherein the mold parts define a thin cavity region for defining the thin-walled area of the plastic product, and first and second flow channels defining opposite boundaries of the thin cavity region; and

(b) directing the injected molten plastic from the gate through the flow channels into the thin cavity region, whereby the molten plastic directed from the first flow channel joins with the molten plastic directed from the second flow channel; and is characterized by the further step of

(c) melding the molten plastic directed from the first flow channel with the molten plastic directed from the second flow channel in a meld chamber defined by the mold parts, the meld chamber being a portion of the mold cavity that is thicker than the thin cavity region to enhance the melding of plastic flowing from different directions into and joining together in the meld chamber, wherein the thickest portion of the meld chamber is displaced from the gate, the meld chamber being located where molten plastic directed into the thin cavity region by the first flow channel joins molten plastic directed into the thin cavity region by the second flow channel.

Injected-molded plastic products made by using the mold of the present invention include a wall having a plurality of protruding spaced-apart ribs, the ribs being defined by the meld chamber/s and the flow channel/s of the mold cavity. It has been discovered that within the area of the wall between a pair of the ribs, the flexure strength is greater in a direction normal to a line that is generally aligned with the direction of the pair of ribs than in a direction parallel to said line. The greatest flexure strength within such area is in the direction defined by the flow of the molten plastic toward the meld chamber/s within the meld cavity.

Within the ribs defined by the meld chambers, the flexure strength is enhanced in the direction normal to the alignment of the ribs because of the relatively greater cross-sectional area of the meld chambers, which enhances melding of the greater volume of molten plastic that has not cooled as much as the molten plastic next to the walls of the mold cavity. Accordingly the strength of the meld is enhanced by more than the proportion of the relative thicknesses of the meld chamber and the adjacent thin cavity region.

Even though the flexure strength of the ribs in a direction normal to the alignment of the ribs is not as great as the flexure strength in such direction within the area between the ribs when the product is bent along a line generally aligned with the ribs. the ribs are not subjected to as much stress when the product is so bent since the area between the ribs is thinner and bends to absorb most of the stresses applied by such bending.

The product also has flexure strength when bent in a direction generally normal to the alignment of the ribs because of the relative thickness of the ribs. As a result, the product is resistant to fracture when bent in any direction.

The term "thin-walled" is used in a relative sense to refer to the thickness of the wall of the product in relation to the overall size of the product.

Injected molded products according to the present invention include many products of diverse configurations, such as, but not limited to cups, boxes, coat hangers and boats, by way of example.

Additional features of the present invention are described with reference to the description of the preferred embodiments.

BRIEF DESCRIPTION OF THE DRAWING

Figure 1 is a schematic view of a mold in a preferred embodiment of the present invention.

Figure 2 illustrates a preferred embodiment of a core mold part for use in the mold of Figure 1 for molding a hollow thin-walled plastic product.

Figure 3 illustrates a thin-walled plastic product made by using a mold of the present invention.

Figure 4 illustrates a pattern of flow channels, thin cavity regions and meld chambers in a mold cavity defined by the base of the core mold part in an alternative preferred embodiment of the present invention.

Figure 5 illustrates a flow channel/meld chamber having an elliptical cross-sectional area as defined by depressions in both mold parts in one preferred embodiment of the present invention.

Figure 6 illustrates a flow channel/meld chamber having an elliptical cross-sectional area as defined by a depression in one mold part in another preferred embodiment of the present invention.

Figure 7 illustrates the stacking of a pair of plastic products defined by a mold cavity having flow channels and/or meld chambers having circular cross-sectional areas defined by depressions in both the first and second mold parts.

Figure 8 illustrates the stacking of a pair of plastic products defined by a mold cavity having flow channels and/or meld chambers having circular cross-sectional areas defined by a depression in only one mold part.

Figure 9 illustrates a pattern of a nonlinear flow channel and a nonlinear meld chamber defined in a mold cavity in an alternative preferred embodiment of the present invention.

Figure 10 illustrates a pattern of a plurality of gates, a flow channel and a meld chamber defined in a mold cavity in an alternative preferred embodiment of the present invention.

DESCRIPTION OF THE PREFERRED EMBODIMENTS

Referring to Figure 1, a mold for use in the present invention includes a hollow mold part 10 and a core mold part 11. The core mold part has a retractable inner portion 12 and an outer portion 13. When clamped together to form the mold, the hollow mold part 10 and the core mold part 11 define a mold cavity 14 therebetween for forming a hollow plastic product. The two mold parts 10, 11 are encompassed by a parting line 16 and further define a gate 17 for admitting molten injected plastic into the mold cavity 14. The mold cavity 14 is centered about an axis 18, and the gate 17 is axially disposed in the mold cavity 14. The retractable inner core portion 12 is axially-movable and when protracted, is in contact with the hollow mold part 10 adjacent the gate 17.

A mold defining such primary and secondary flow channels and the use of such a mold are the subject of U. S. Patent Application No. 7,462, entitled "Stabilized-Core Injection Molding of Hollow Thin-Walled Plastic Products" filed by the present inventor, Jens Ole Sorensen, on January 26, 1987.

Referring to the preferred embodiment of the core mold part 11 shown in Figure 2, the mold parts 10, 11 define primary flow channels 23 extending from the gate 17. When the retractable inner portion 12 of the core mold part 11 is protracted, the primary flow channels 23 direct initially injected molten plastic 24 from the gate 17 to create stabilizing regions 25 of stiffened plastic, to thereby impede lateral deflection of the mold parts 10, 11 with respect to each other when

additional molten plastic 26 subsequently is injected, whereby the side walls of the molded plastic product formed in the mold cavity 14 are uniformly dimensioned.

The mold parts 10, 11 further define secondary flow channels 27. When the retractable inner portion 12 of the core mold part 11 is protracted, the secondary flow channels 27 exist, but they are isolated from the gate 17. In the portion of the mold cavity 14 defined by the outer portion 13 of the core mold part 11, the secondary flow channels 27 are interposed between the primary flow channels 23. When the retractable inner core portion 12 of the core mold part 11 is retracted, the flow channels 27 are significantly thicker than the thin cavity regions of the mold cavity and the average wall-defining thickness of the mold cavity 14 and direct the subsequently injected molten plastic 26 between the stabilizing regions 25 of stiffened plastic and into the side-wall-defining regions 29 of the mold cavity 14, to thereby enhance the flow of the molten plastic into the side-wall-defining regions 29 of the mold cavity 14.

The side-wall-defining regions 29 of the mold cavity 14 include thin cavity regions 28 for defining the thin-walled areas of the plastic product. The secondary flow channels 27 define opposite boundaries of each thin cavity region 28, and direct the injected molten plastic from the gate 17 into the thin cavity region 28 whereby the molten plastic directed from one secondary flow channel 27 joins with the molten plastic directed from an adjacent secondary flow channel 27.

The mold parts 10, 11 further define meld chambers 30 having their thickest portions displaced from the gate 17 and the flow channels 23, 27 and interposed between the secondary flow channels 27 where molten plastic directed into each thin cavity region 28 by one secondary flow channel 27 joins molten plastic directed into the thin cavity region 28 by an adjacent secondary flow channel 27. Each meld chamber 30 is significantly thicker than the thin cavity region 28 for enabling molten plastic directed from one secondary flow channel 27 to meld with the molten plastic directed from the adjacent secondary flow channel 27. The meld chambers 30 extend to the parting line 16 of the mold.

A thin-walled plastic product 39 molded by using a mold according to the present invention is illustrated in Figure 3. In such embodiment the flow channels and meld chambers are defined by the hollow mold part.

The product 39 is a cup including a side wall 41 having a plurality of protruding spaced-apart ribs 43. The ribs 43 are defined by the secondary flow channels 27 and the meld chambers 30 of the mold cavity 14.

Within the area of the wall between a pair of the ribs 43, the flexure strength is greater in a direction normal to a line that is generally aligned with the direction of the pair of ribs 43 than in a direction parallel to said line.

In an alternative preferred embodiment, the core mold part does not include a retractable portion. In such embodiment, the base portion of the core mold part that is adjacent the gate defines the pattern of flow chambers and meld

chambers shown in Figure 4. The flow channels 40 and meld chambers 44 continue into the side-wall-defining regions of the core mold part 45.

Referring to Figure 4, the mold parts define flow channels 40 which define opposite boundaries of thin cavity regions 42 and direct injected molten plastic from the gate 17 into the thin cavity regions 42. The molten plastic directed from one flow channel 40 joins with the molten plastic directed from an adjacent flow channel 40. The flow channels 40 are bifurcated in the base region so as to be uniformly disposed about the circumference of the core mold part to define uniformly dimensioned thin cavity regions in the side-wall-defining regions of the mold cavity 14, such as shown in Figure 2.

The mold parts further define meld chambers 44 in the base region. The thickest portions of the meld chambers 44 are displaced from the gate 17 and the meld chambers 44 are located between the flow channels 40 where molten plastic directed into the thin cavity region 42 by one flow channel 40 joins molten plastic directed into the thin cavity region 42 by the adjacent flow channel 40. The meld chambers 44 are significantly thicker than the thin cavity region 42 for enabling the molten plastic directed from one flow channel 40 to meld with molten plastic directed from the adjacent flow channel 40.

The cross-sectional areas of the respective flow channels and meld channels have approximately the same cross-sectional area, and are elliptical as shown in Figures 5 and 6. A circular cross-sectional area is preferred, as shown in

Figures 7 and 8, for enhancing the meld. However, if the dimension of the ellipse normal to the breadth of the thin cavity region 28 is reduced in relation to its perpendicular dimension, the stacking height of conical-shaped products made with the mold, such as shown in Figure 3, is minimized.

The stacking height of the products also may be minimized by defining the respective flow channels and the meld chambers by depressions in both the first and second mold parts, as shown in Figures 5 and 7. The relative stacking heights of products made with molds in which the flow channels and meld chambers are defined by depressions in both mold parts and products made with molds in which the flow channels and meld chambers are defined by depressions in only one mold part are illustrated in Figures 7 and 8 respectively. The respective distances 46 and 48 shown in Figures 7 and 8 are proportional to the respective stacking heights of such products. The embodiments of Figures 6 and 8 are preferred when it is desired to provide a molded product having a relatively uniform surface 50.

Alternative embodiments of different combinations of meld chambers, flow chambers and gates defined by the mold parts are shown in Figures 9 and 10.

Referring to Figure 9, the mold parts define a gate 52, a nonlinear flow channel 54 connected to the gate 52, and a nonlinear meld chamber 56 located between the gate 52 and the flow channel 54 and between a first portion 58 and a second portion 60 of the flow channel 54 where molten plastic directed into the

thin cavity region by the flow channel 54 joins with molten plastic admitted into the thin cavity region from the gate 52 and where molten plastic directed into the thin cavity region by the first portion 58 of the flow channel 54 joins with molten plastic directed into the thin cavity region by the second portion 60 of the flow channel 54.

Referring to Figure 10, the mold parts define a first gate 62, a second gate 64, a flow channel 66 connected to the second gate 64 and a meld chamber 68 located between the first gate 62 and the flow channel 66 where molten plastic admitted into the thin cavity region from the first gate 62 joins molten plastic directed into the thin cavity region by the flow channel 66.

CLAIMS

1. A mold for injection molding a plastic product having a thin-walled area, comprising

a first mold part and a second mold part defining a mold cavity therebetween, encompassed by a parting line, for forming the plastic product, and further defining one or more gates for admitting injected molten plastic into the cavity;

wherein the mold parts define

a thin cavity region for defining the thin-walled area of the plastic product; and

one or more flow channels, defining boundaries of the thin cavity region, and for directing the injected molten plastic from one or more of the gates into the thin cavity region, whereby the molten plastic directed from one portion of a flow channel joins with the molten plastic admitted from a given gate or directed from another portion of a flow channel;

characterized by the molds parts further defining

a meld chamber, which is a portion of the mold cavity that is thicker than the thin cavity region to enhance the melding of plastic flowing from different directions into and joining together in the meld chamber, wherein the thickest

portion of the meld chamber is displaced from the gate, the meld chamber being located where molten plastic directed into the thin cavity region by the one portion of a flow channel joins molten plastic admitted into the thin cavity region from the given gate or directed into the thin cavity region by the other portion of a flow channel.

2. A mold according to Claim 1, wherein at least one of the flow channels is bifurcated.

3. A mold according to Claim 1, wherein the meld chamber continues to the parting line of the mold.

4. A mold according to Claim 1, wherein the respective flow channel/s and/or the meld chamber are defined by depressions in both the first and second mold parts.

5. A mold according to Claim 1, wherein the flow channel/s and the meld chamber have approximately the same cross-sectional areas.

6. A mold according to Claim 1, wherein the cross-sectional areas of the flow channel/s and/or the meld chamber are elliptical.

7. A mold according to Claim 1 for injection molding and controlling the dimensions of a hollow plastic product having side walls defined by the thin cavity regions,

wherein one of the mold parts includes a retractable portion adjacent the gate;

wherein the mold parts define primary flow channels extending from the gate, which, when the retractable portion of the one mold part is protracted, direct initially injected molten plastic from the gate to create stabilizing regions of stiffened plastic, to thereby impede lateral deflection of the mold parts with respect to each other when additional molten plastic subsequently is injected; and

wherein the first mentioned flow channels defined by the mold part/s are secondary flow channels, which exist but are isolated from the gate when the retractable portion is protracted; which are interposed between the primary flow channels; and which, when the retractable portion is retracted, are significantly thicker than the adjacent portions of the mold cavity and the average wall-defining thickness of the mold cavity and direct the subsequently injected molten plastic between the stabilizing regions of stiffened plastic and into the side-walled-defining region of the mold cavity beyond the stabilizing regions.

8. A mold according to Claim 1, wherein there is a flow channel isolated from the meld chamber and located between the meld chamber and the gate.

9. A mold for injection molding a plastic product having a thin-walled area, comprising

a first mold part and a second mold part defining a mold cavity therebetween, encompassed by a parting line, for forming the plastic product; and

means defining a gate for admitting injected molten plastic into the cavity;

wherein the molds parts define

a thin cavity region for defining the thin-walled area of the plastic product; and

first and second flow channels, defining opposite boundaries of the thin cavity region, and for directing the injected molten plastic from the gate into the thin cavity region, whereby the molten plastic directed from the first flow channel joins with the molten plastic directed from the second flow channel;

characterized by the respective first and second flow channels being defined by depressions in both the first and second mold parts.

10. A mold according to Claim 9, wherein the cross-sectional areas of the flow channels are semi-elliptical.

11. A method for injection molding a plastic product having a thin-walled area, comprising the steps of

(a) injecting molten plastic from a gate into a mold cavity defined by and

positioned between a first mold part and a second mold part and encompassed by a parting line, for forming the product; wherein the mold parts define a thin cavity region for defining the thin-walled area of the plastic product, and first and second flow channels defining opposite boundaries of the thin cavity region; and

(b) directing the injected molten plastic from the gate through the flow channels into the thin cavity region, whereby the molten plastic directed from the first flow channel joins with the molten plastic directed from the second flow channel; characterized by the further step of

(c) melding the molten plastic directed from the first flow channel with the molten plastic directed from the second flow channel in a meld chamber defined by the mold parts, the meld chamber being a portion of the mold cavity that is thicker than the thin cavity region to enhance the melding of plastic flowing from different directions into and joining together in the meld chamber, wherein the thickest portion of the meld chamber is displaced from the gate, the meld chamber being located where molten plastic directed into the thin cavity region by the first flow channel joins molten plastic directed into the thin cavity region by the second flow channel.

12. A method for injection molding a plastic product having a thin-walled area, comprising the steps of

(a) injecting molten plastic from a gate into a mold cavity defined by and between a first mold part and a second mold part and encompassed by a parting

line, for forming the product; wherein the mold parts define a thin cavity region for defining the thin-walled area of the plastic product, and first and second flow channels defining opposite boundaries of the thin cavity region; and

(b) directing the injected molten plastic from the gate through the flow channels into the thin cavity region, whereby the molten plastic directed from the first flow channel joins with the molten plastic directed from the second flow channel;

characterized by the respective first and second flow channels being defined by depressions in both the first and second mold parts.

13. A plastic product molded by the method of Claim 11.

14. A plastic product molded by the method of Claim 12.

15. An injection-molded plastic product, comprising

a wall, with a plurality of protruding spaced-apart ribs;

wherein within the area between a pair of the ribs the flexure strength is greater in a direction normal to a line that is generally aligned with the direction of the pair of ribs than in a direction parallel to said line.

AMENDED CLAIMS

[received by the International Bureau on 20 June 1988 (20.06.88)
original claims 1-15 replaced by amended claims 1-6 (4 pages)]

1. A mold for injection molding a plastic product having a thin-walled area, comprising

a first mold part and a second mold part defining a mold cavity therebetween, encompassed by a parting line, for forming the plastic product, and further defining one or more gates for admitting injected molten plastic into the cavity;

wherein the mold parts define

a thin cavity region for forming the thin-walled area of the plastic product; and

one or more flow channels, which are portions of the mold cavity that are thicker than the thin cavity region, for directing the injected molten plastic into the thin cavity region, whereby the molten plastic directed from one portion of a flow channel joins with the molten plastic admitted from a given gate or directed from another portion of a flow channel;

characterized by the molds parts further defining

a meld chamber, which is a portion of the mold cavity that is thicker than the thin cavity region to enhance the melding of plastic flowing from different directions into and joining together in the meld chamber, wherein the thickest portion of the meld chamber is displaced from the gate and the flow channel/s by the thin cavity region, the meld chamber being at least partially located extensively between the one portion of the flow channel and the given gate or the other portion of a flow channel where molten plastic directed into the thin cavity region by the one portion of the flow channel joins molten plastic admitted into the thin cavity region from the given gate or directed into the thin cavity region by the other portion of a flow channel.

2. A method for injection molding a plastic product having a thin-walled area, comprising the steps of

(a) injecting molten plastic from a gate into a mold cavity defined by and positioned between a first mold part and a second mold part and encompassed by a parting line, for forming the product; wherein the mold parts define a thin cavity region for forming the thin-walled area of the plastic product, and one or more flow channels which are portions of the mold cavity that are thicker than the thin cavity region; and

(b) directing the injected molten plastic through the one or more flow channels into the thin cavity region, whereby the molten plastic directed from one portion of a flow channel joins with the molten plastic admitted from the gate or directed from another portion of a flow channel;

characterized by the further step of

(c) melding the molten plastic directed from the one portion of a flow channel with the molten plastic directed from the other portion of a flow channel in a meld chamber defined by the mold parts, the meld chamber being a portion of the mold cavity that is thicker than the thin cavity region to enhance the melding of plastic flowing from different directions into and joining together in the meld chamber, wherein the thickest portion of the meld chamber is displaced from the gate and the flow channel/s by the thin cavity region, the meld chamber being at least partially located extensively between the one portion of the flow channel and the gate or the other portion of a flow channel where molten plastic directed into the thin cavity region by the one portion of the flow channel joins molten plastic admitted into the thin cavity region from the gate or directed into the thin cavity region by the other portion of a flow channel.

3. A product that is injection molded according to the method of Claim 2.

4. An injection-molded, thin-walled, product formed by a mold cavity having a thin-cavity region; a pair of flow channels, which are thicker than the thin-cavity region for directing injected plastic into the thin-cavity region; and a meld chamber, which is thicker than the thin cavity region, is displaced from the flow channels, and is at least partially located extensively between the flow channels for melding plastic flowing together from different directions, the product comprising

a thin-walled area formed by the thin-cavity region;

first and second ribs formed by the pair of flow channels, said first and second ribs being thicker than the thin-walled area; and

a third rib formed by the meld chamber, wherein the third rib is displaced from the first and second ribs by the thin-walled area and is at least partially located extensively between the first and second ribs, said third rib being thicker than the thin-walled area.

5. An injection-molded, thin-walled, plastic product formed by a mold cavity having a thin-cavity region; a gate, a flow channel, which is thicker than the thin-cavity region for directing injected plastic into the thin-cavity region; and a meld chamber, which is thicker than the thin cavity region, is displaced from the flow channel and the gate, and is at least partially located extensively between the flow channel and the gate for melding plastic flowing together from different directions, the product comprising

a thin-walled area formed by the thin-cavity region;

a gate mark formed at the gate;

a first rib formed by the flow channel said first rib being thicker than the thin-walled area; and

a second rib formed by the meld chamber, wherein the second rib is displaced from the first rib and the gate mark by the thin-walled area and is at least partially located extensively between the gate mark and the first rib, said second rib being thicker than the thin-walled area.

6. An injection-molded, thin-walled, plastic product formed by a mold cavity having a thin-cavity region; a nonlinear flow channel, which is thicker than the thin-cavity region for directing injected plastic into the thin-cavity region; and a meld chamber, which is thicker than the thin cavity region, is displaced from the flow channel, and is at least partially located extensively between different portions of the flow channel for melding plastic flowing together from different directions, the product comprising

a thin-walled area formed by the thin-cavity region;

a nonlinear first rib formed by the flow channel, said first rib being thicker than the thin-walled area; and

a second rib formed by the meld chamber, wherein the second rib is displaced from the nonlinear first rib by the thin-walled area and is at least partially located extensively between different portions of the first rib, said second rib being thicker than the thin-walled area.

STATEMENT UNDER ARTICLE 19

The new claims are believed to patentably distinguish over cited references by reason of the recitations in the claims of the thickest portion of the meld chamber being displaced from the flow channel/s and the gate and the meld chamber being at least partially located extensively between different flow channel portions and/or the gate for melding plastic flowing together from different directions.

The difference between "meld chambers" and "flow channels" is clearly defined in the Description at pages 1 and 2. A meld chamber is a portion of a mold cavity that is thicker than the thin-cavity region of the mold cavity to enhance the melding of plastic flowing from different directions and joining together in the meld chamber, wherein the thickest part of the meld chamber is displaced from the flow channels and the gate. On the other hand, a flow channel is a portion of the mold cavity that directs injected plastic into the thin-cavity region.

In the formation of products described in US, A 3,944,124, the plastic flows into the thin-cavity region from the flow channels that form the so-called reinforcing zones (ribs). See Column 4, lines 54-58 of US, A 3,944,124. US, A 3,944,124 is exemplary of the prior art discussed in the Background portion of the Description.

Products that have been injection molded to include ribs formed by meld chambers in those portions of the thin-walled area formed by plastic joining upon flowing together from different directions have enhanced flexure strength in such portions of the thin-walled area, as pointed out in the amended Description at page 4, line 1 to page 5, line 3. In the absence of ribs formed by meld chambers, products having a thin-walled area formed by plastic directed into the thin-cavity region of a mold cavity from a gate and/or one or more flow channels of the mold cavity are structurally weak in those portions of the thin-walled area formed by plastic joined together upon flowing from different directions from the gate and/or

from one or more flow channels of the mold cavity. This is pointed out in the Description at page 1, line 9 to page 2. line 2.

In the products described in US, A 3,944,124, all of the so-called reinforcing zones 4, 7, 8, 9, 10, 11, 12, 13 and 14 are ribs formed by flow channels of a mold cavity. The product of US, A 3,944,124 does not include ribs formed by meld chambers that are at least partially located extensively between flow channels to enhance the melding of plastic flowing together extensively from different directions from the flow channels. Accordingly, the flexure strength of the molded product of US, A 3,944,124 is not enhanced extensively within the thin-walled area between the ribs formed by the flow channels.

FIG. 1

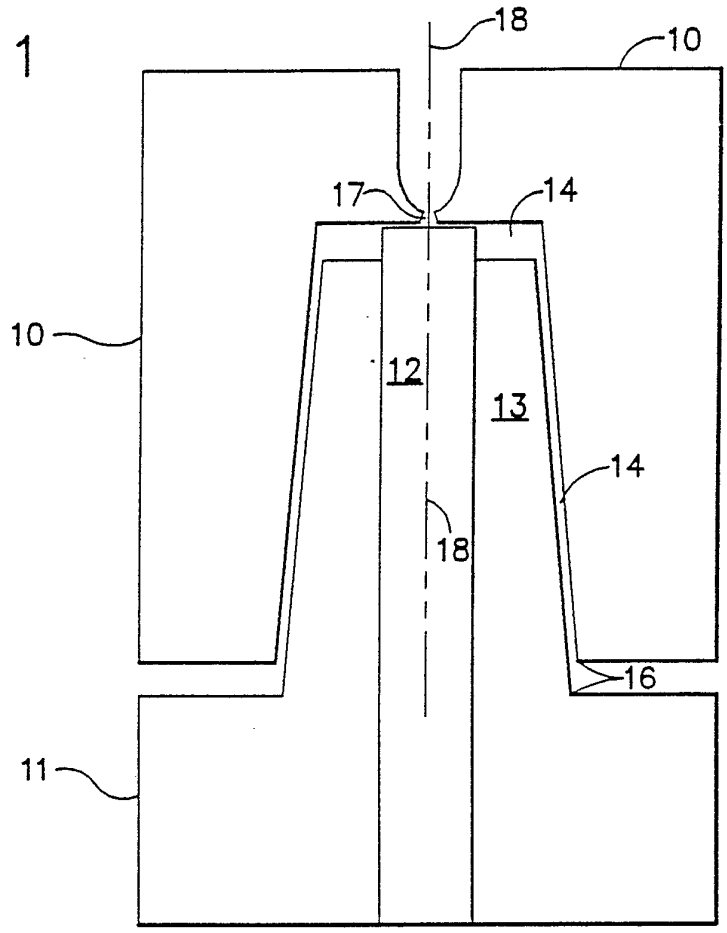

FIG. 2

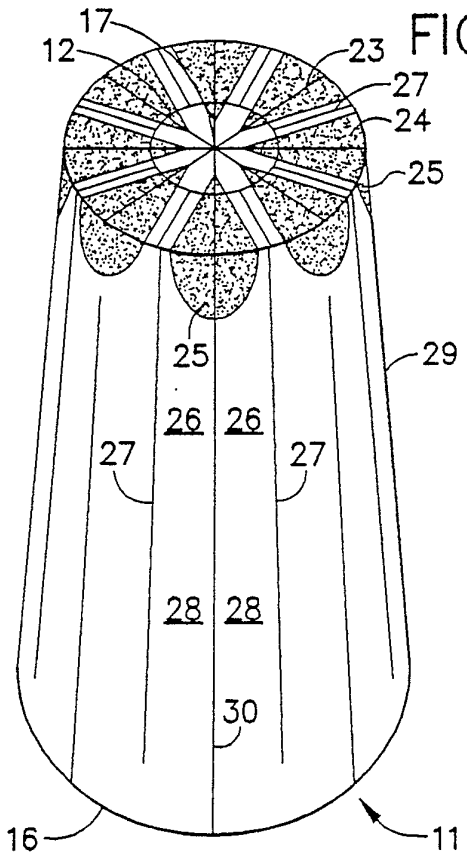

FIG. 3

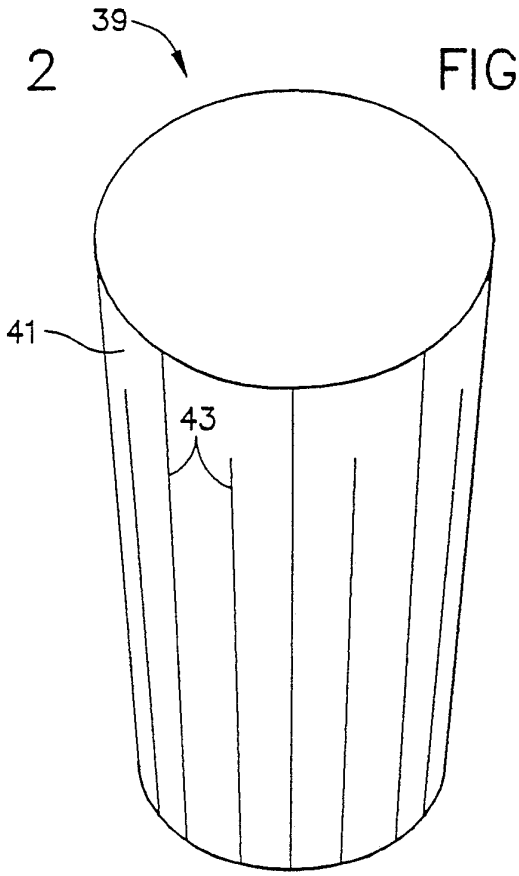

FIG. 4

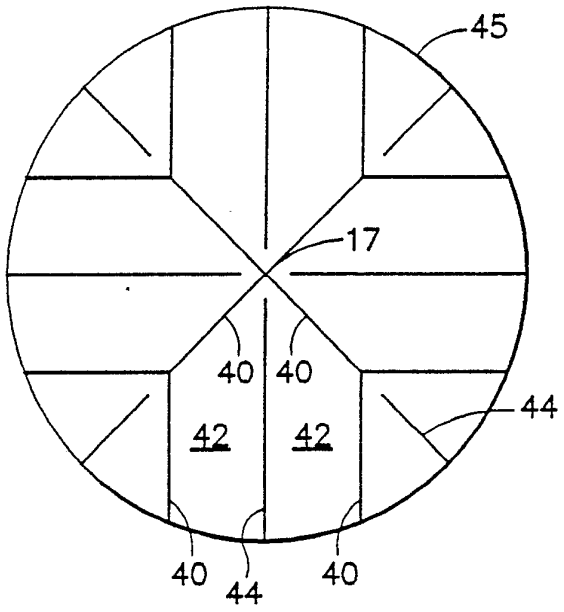

FIG. 5

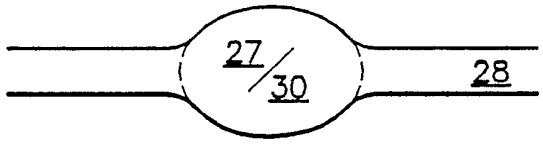

FIG. 6

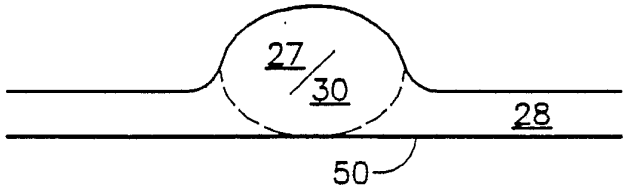

FIG. 7

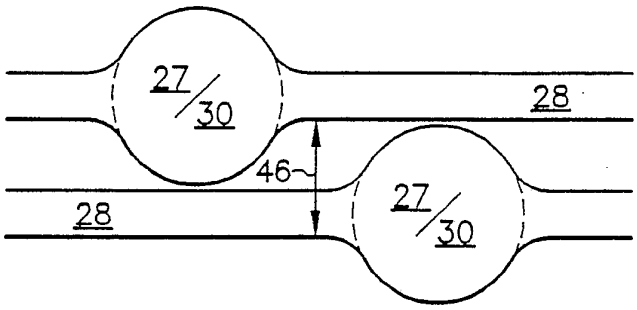

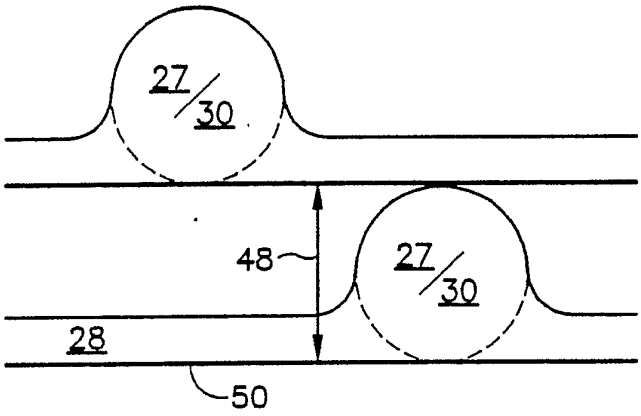

FIG. 8

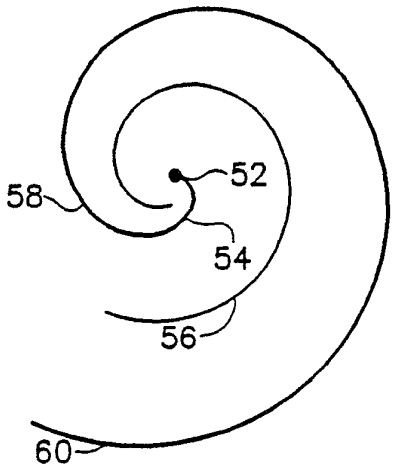

FIG. 9

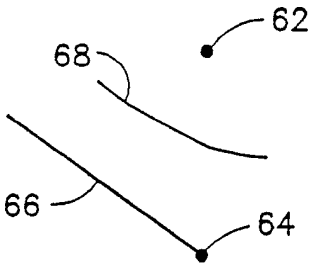

FIG. 10

INTERNATIONAL SEARCH REPORT

International Application No. PCT/US88/00212

I. CLASSIFICATION OF SUBJECT MATTER (if several classification symbols apply, indicate all) [6]

According to International Patent Classification (IPC) or to both National Classification and IPC

IPC (4); B65D 1/02; B29C 33/00, 45/03, 45/26
US. CL. 229/1.5B; 249/122; 264/328.1

II. FIELDS SEARCHED

Minimum Documentation Searched [7]

Classification System	Classification Symbols
U.S.	156/35, 156; 215/1.5B; 220/70, 72; 229/1.5B; 249/122; 264/328.1

Documentation Searched other than Minimum Documentation to the Extent that such Documents are Included in the Fields Searched [8]

U.S. 425/4R, 537, 577, 817C

III. DOCUMENTS CONSIDERED TO BE RELEVANT [9]

Category *	Citation of Document, [11] with indication, where appropriate, of the relevant passages [12]	Relevant to Claim No. [13]
Y	US,A, 4,620,639 (Yoshino) 04 November 1986 See Figures 16, 17, 18 and 25; column 3, lines 17-43.	1-15
Y	US,A, 3,944,124 (Hexel) 16 March 1976 See entire document.	1-15
Y	US,A, 4,140,828 (Copping) 20 February 1979 See Figure 2 and column 3, lines 25-29 and 34-61.	1-15
Y	US,A, 4,403,706 (Mahajan) 13 September 1983 See figures 2, 14, 16 and column 2, lines 64-68; column 4, lines 28-32	1-15

* Special categories of cited documents: [10]

"A" document defining the general state of the art which is not considered to be of particular relevance

"E" earlier document but published on or after the international filing date

"L" document which may throw doubts on priority claim(s) or which is cited to establish the publication date of another citation or other special reason (as specified)

"O" document referring to an oral disclosure, use, exhibition or other means

"P" document published prior to the international filing date but later than the priority date claimed

"T" later document published after the international filing date or priority date and not in conflict with the application but cited to understand the principle or theory underlying the invention

"X" document of particular relevance; the claimed invention cannot be considered novel or cannot be considered to involve an inventive step

"Y" document of particular relevance; the claimed invention cannot be considered to involve an inventive step when the document is combined with one or more other such documents, such combination being obvious to a person skilled in the art.

"&" document member of the same patent family

IV. CERTIFICATION

Date of the Actual Completion of the International Search

09 MARCH 1988

Date of Mailing of this International Search Report

20 APR 1988

International Searching Authority

ISA/US

Signature of Authorized Officer

Willard E. Hoag

WILLARD E. HOAG