United States Patent

[11] 3,619,311

[72] Inventors **Glenn R. Rose**
St. Paul;
Robert S. Hedin, Minneapolis, both of Minn.

[21] Appl. No. **52,018**
[22] Filed **July 2, 1970**
[23] **Division of Ser. No. 838,020, June 19, 1969, Pat. No. 3,561,398, which is a continuation of Ser. No. 561,882, June 20, 1966, abandoned**
[45] Patented **Nov. 9, 1971**

[73] Assignee **Programmed & Remote Systems Corporation**
St. Paul, Minn.

[54] **METHOD OF PROGRAMMING A CONTROLLER**
4 Claims, 16 Drawing Figs.

[52] **U.S. Cl.** **156/62,** 117/105.3, 117/DIG. 2, 118/305, 118/323

[51] **Int. Cl.** **B31b 1/62**

[50] **Field of Search** ..... 156/62; 118/305, 323; 117/105.3, 105.4, DIG. 2

[56] **References Cited**

UNITED STATES PATENTS

2,852,305	9/1958	Shaffer	118/305 X
2,966,881	1/1961	Enssle	118/323 X

Primary Examiner—Benjamin A. Borchelt
Assistant Examiner—Harold Tudor
Attorney—Dugger, Peterson, Johnson and Westman

ABSTRACT: A method of programming a controller for an oscillating spray painter to paint an object that moves past the sprayer. A scale drawing of the object is superimposed on a developed layout of the path of the sprayer. A control member for the controller is divided into sections corresponding to the strokes of the sprayer and the points where painting should begin and stop during each stroke of the sprayer are determined from the scale drawing and then correspondingly placed on the control member.

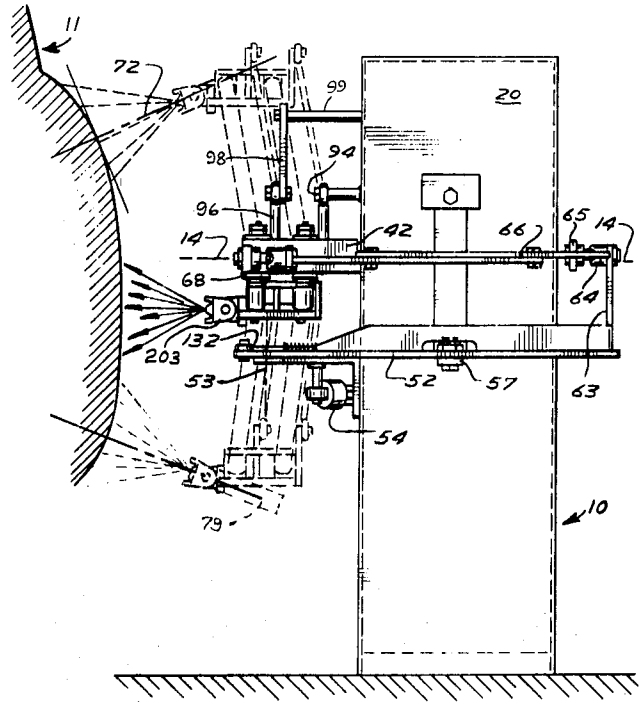

FIG. 5

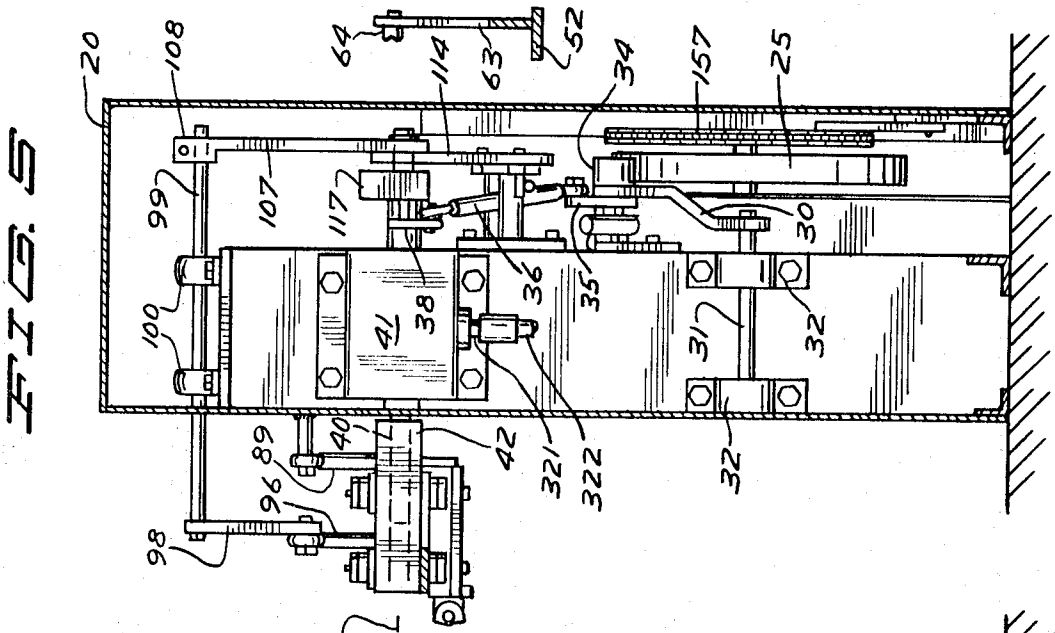

FIG. 7

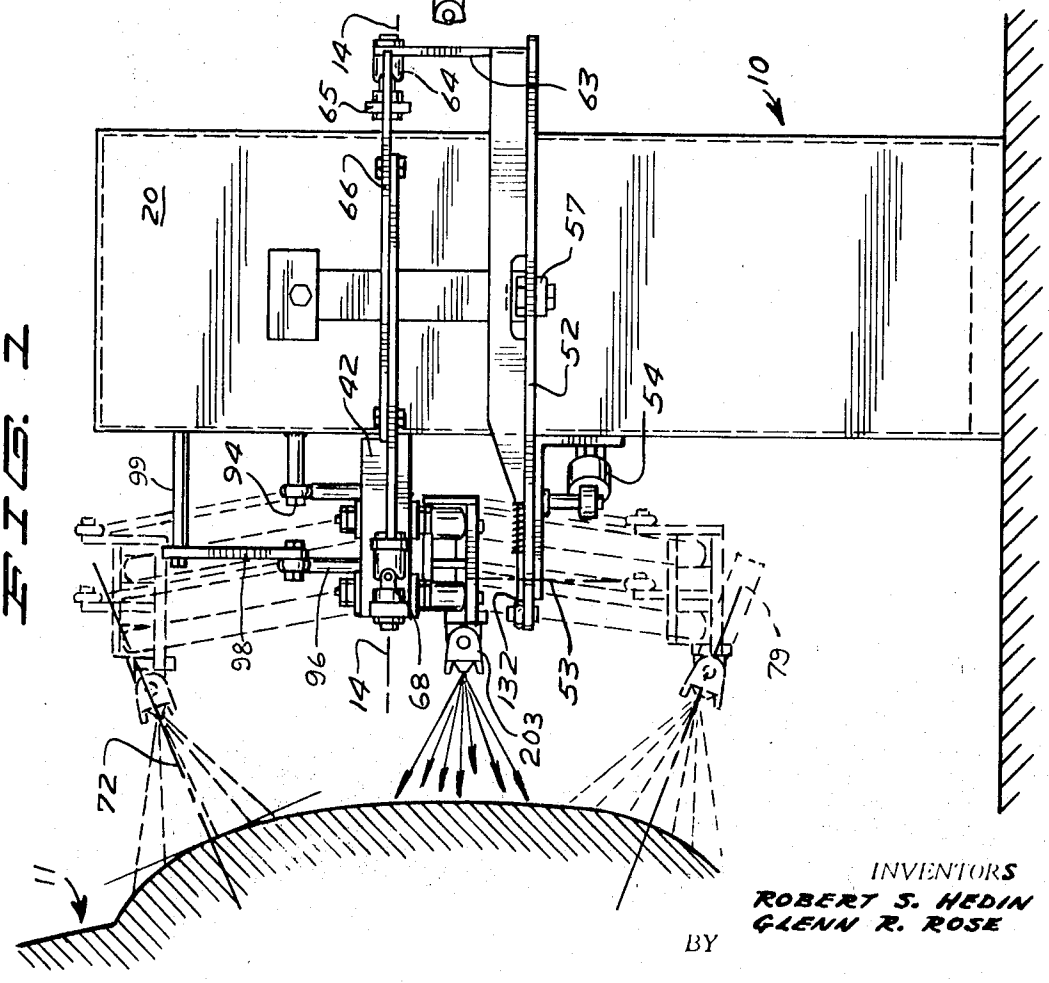

INVENTORS
ROBERT S. HEDIN
GLENN R. ROSE

BY

ATTORNEYS

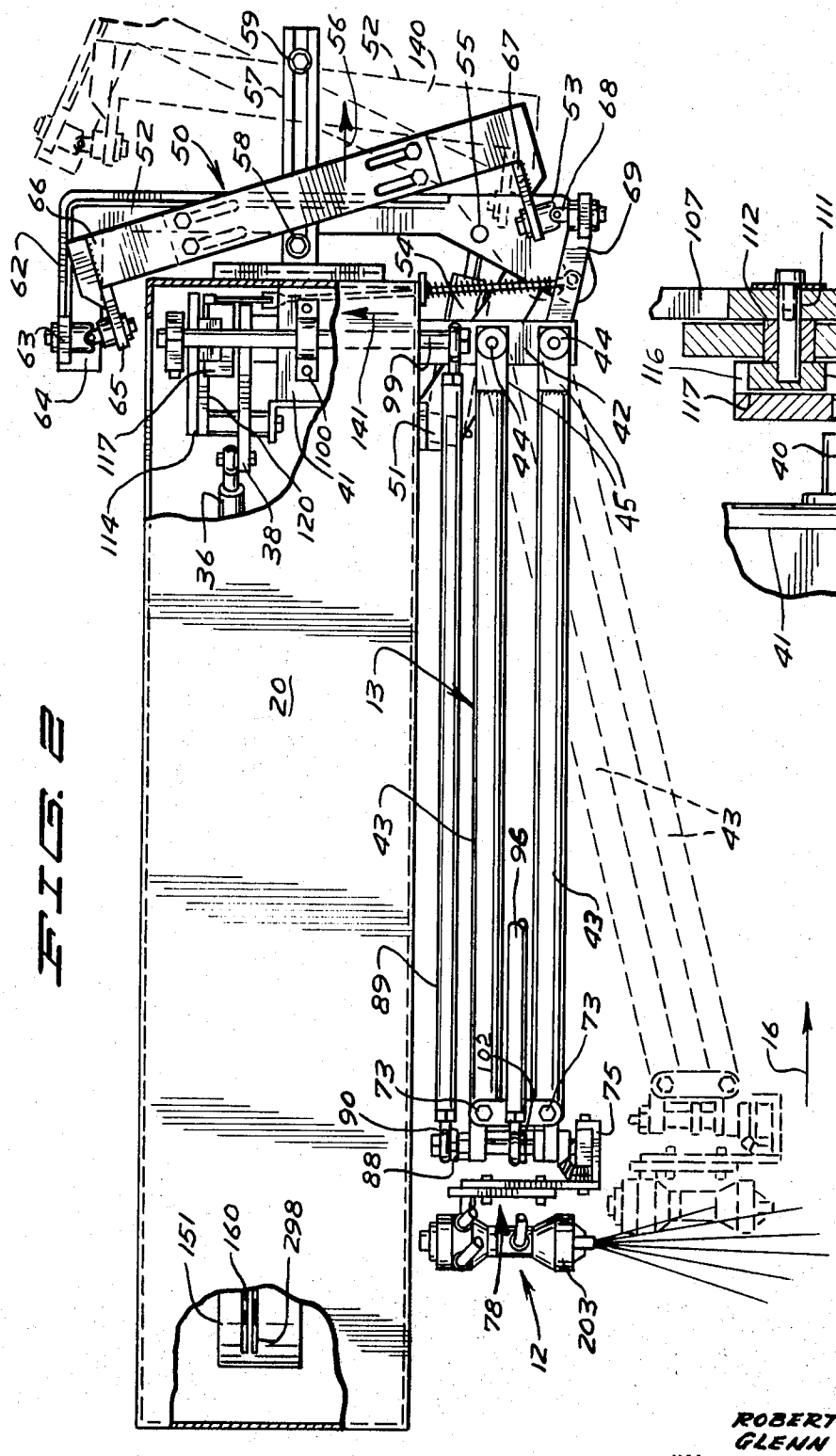

FIG. 2

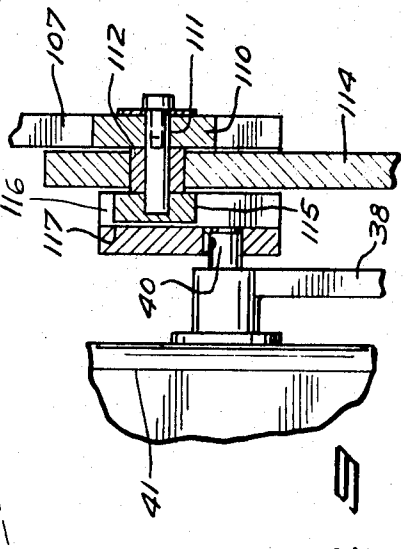

FIG. 9

INVENTORS
ROBERT S. HEDIN
GLENN R. ROSE

BY

ATTORNEYS

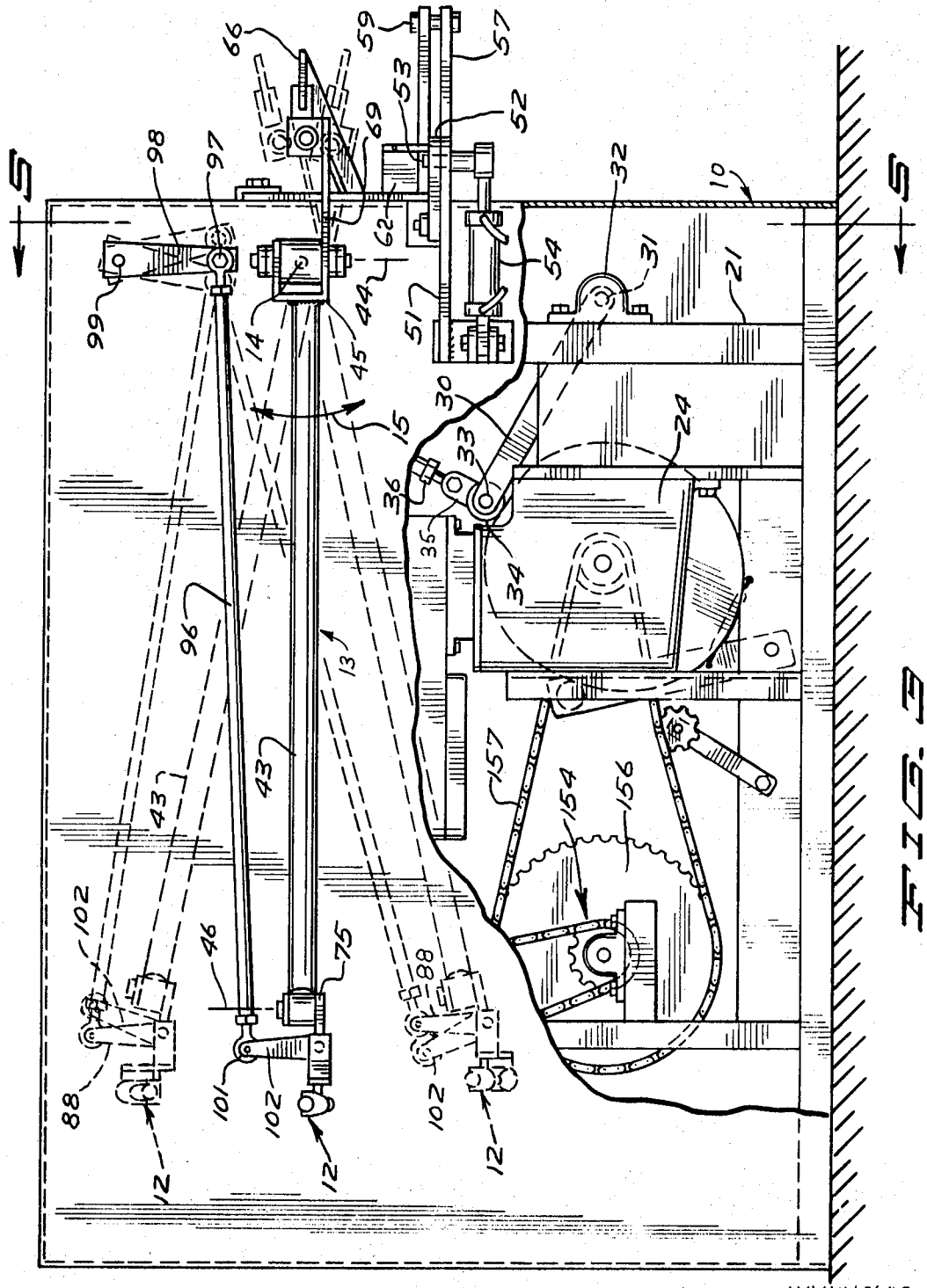

FIG. 3

INVENTORS
ROBERT S. HEDIN
GLENN R. ROSE

BY

ATTORNEYS

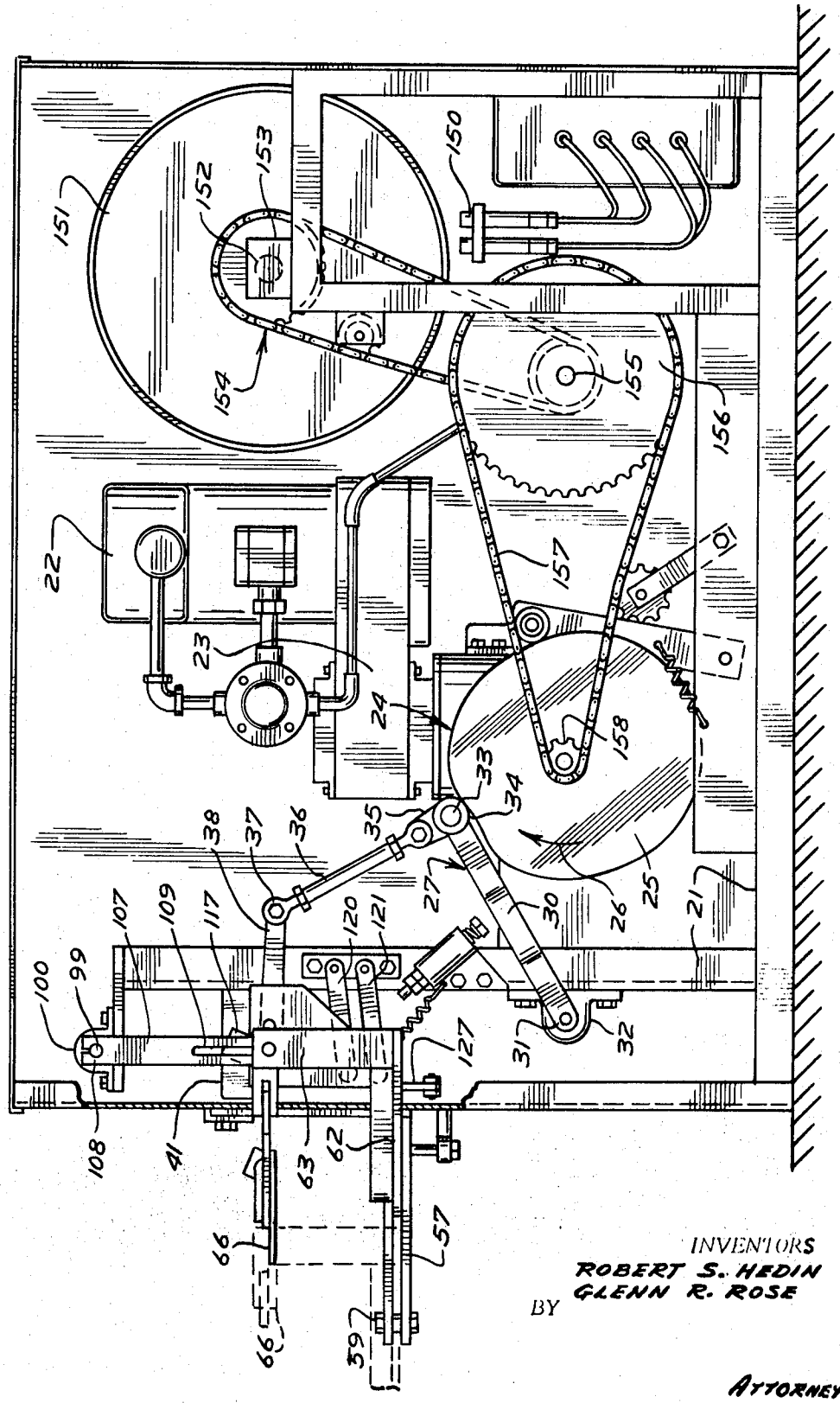

FIG. 4

INVENTORS
ROBERT S. HEDIN
GLENN R. ROSE

BY

ATTORNEYS

FIG. 7

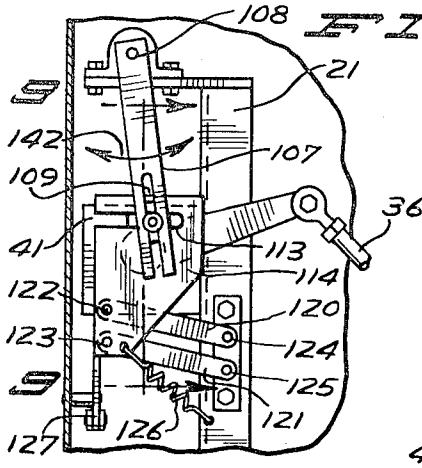

FIG. 8

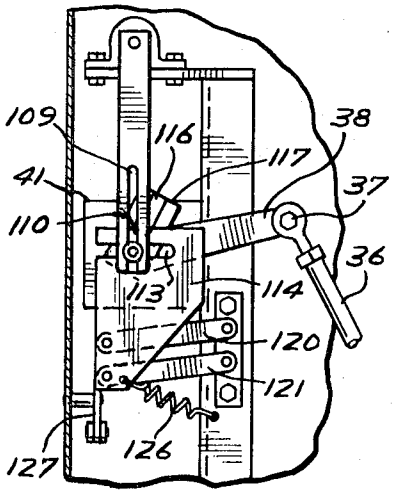

FIG. 6

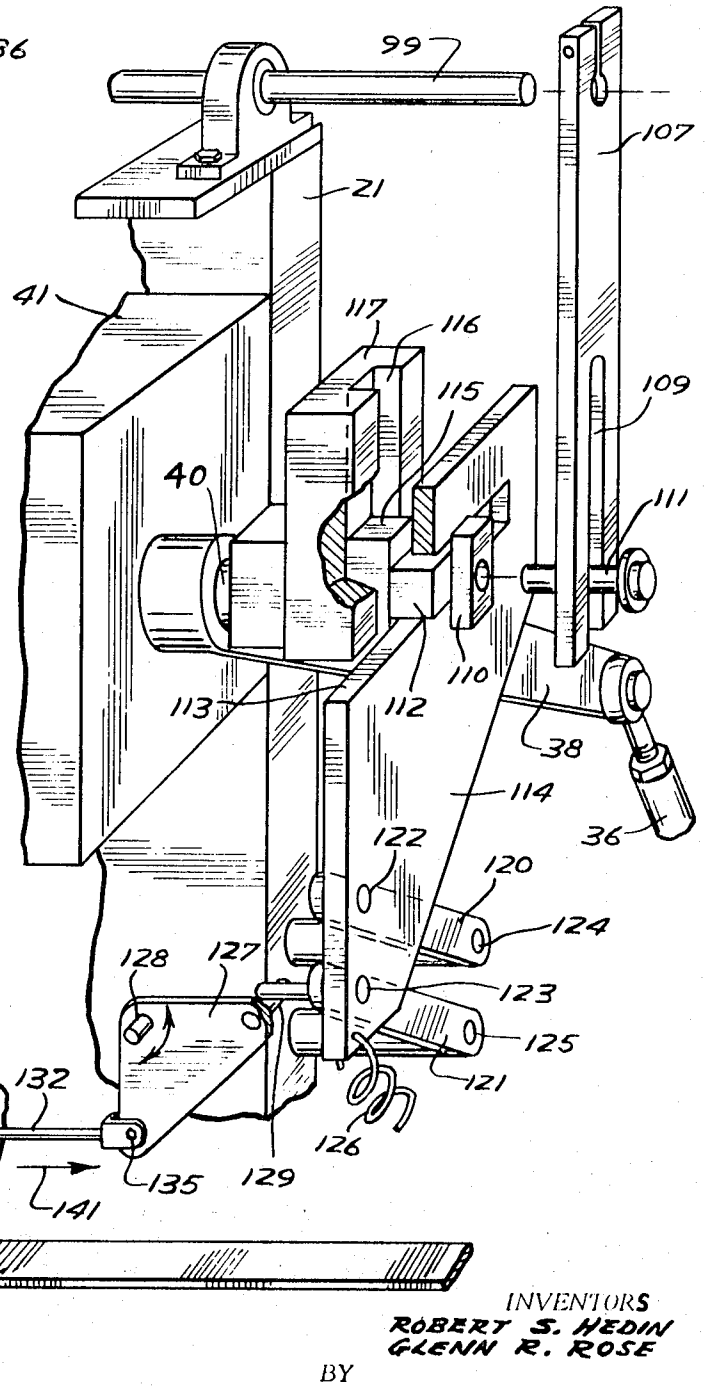

INVENTORS
ROBERT S. HEDIN
GLENN R. ROSE

BY

ATTORNEYS

FIG. 10

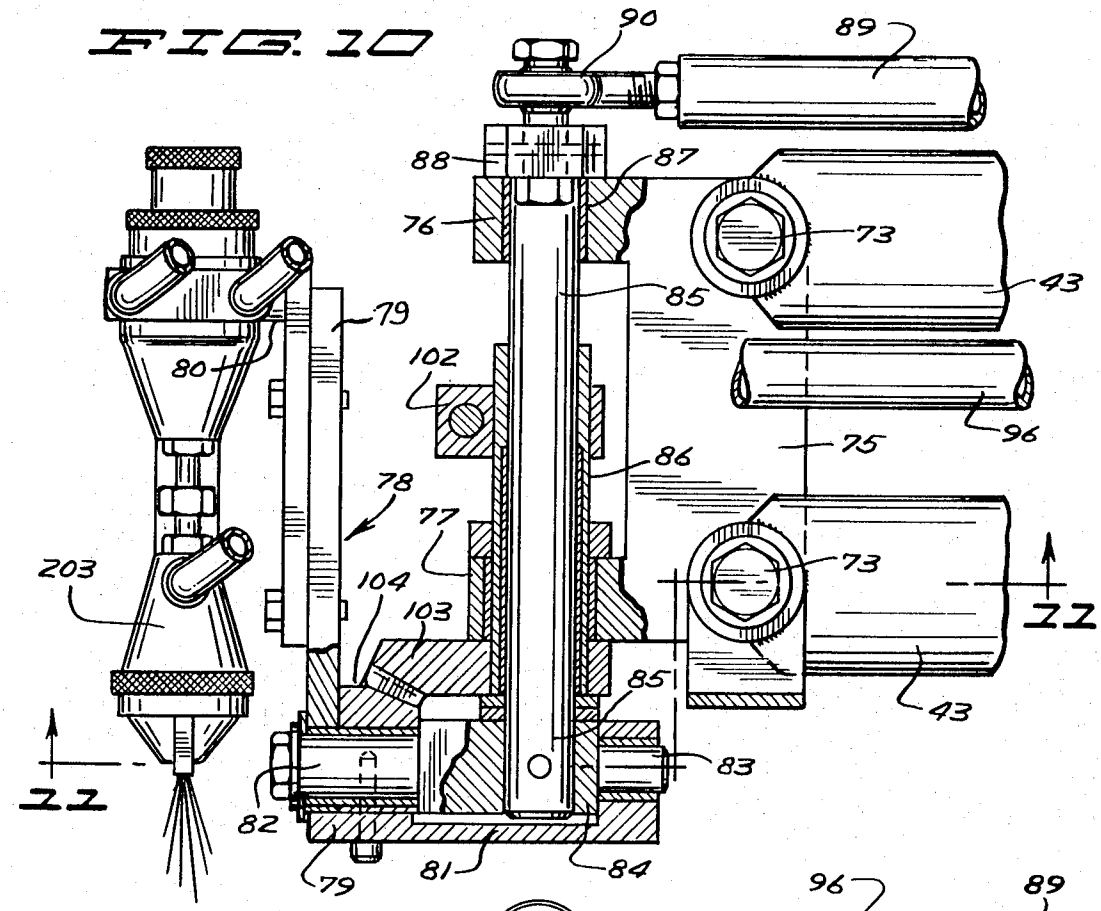

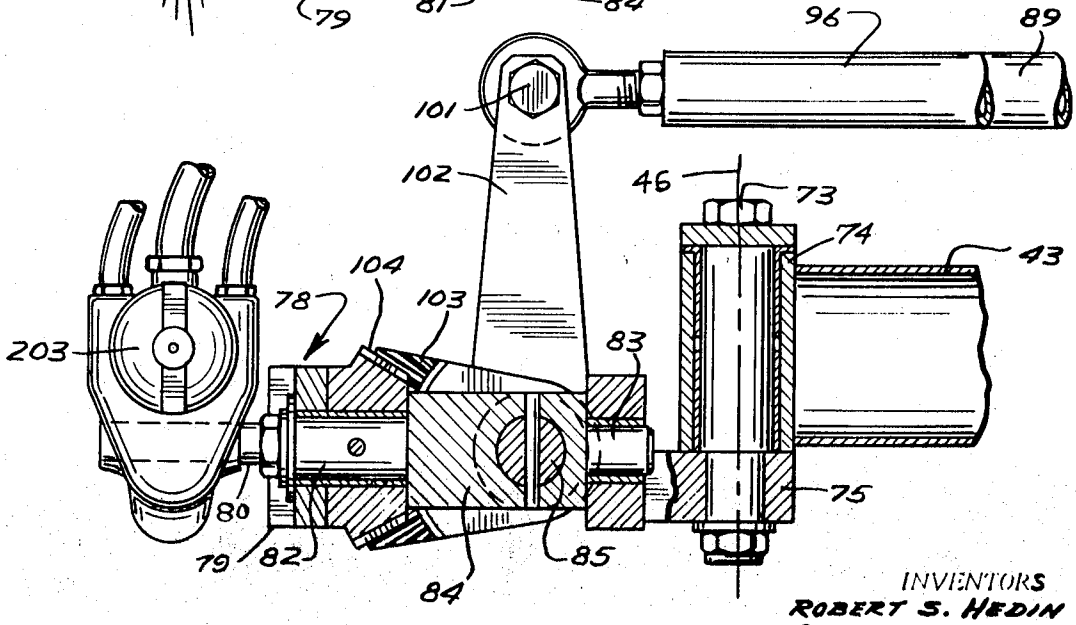

FIG. 11

INVENTORS
ROBERT S. HEDIN
GLENN R. ROSE

BY

ATTORNEYS

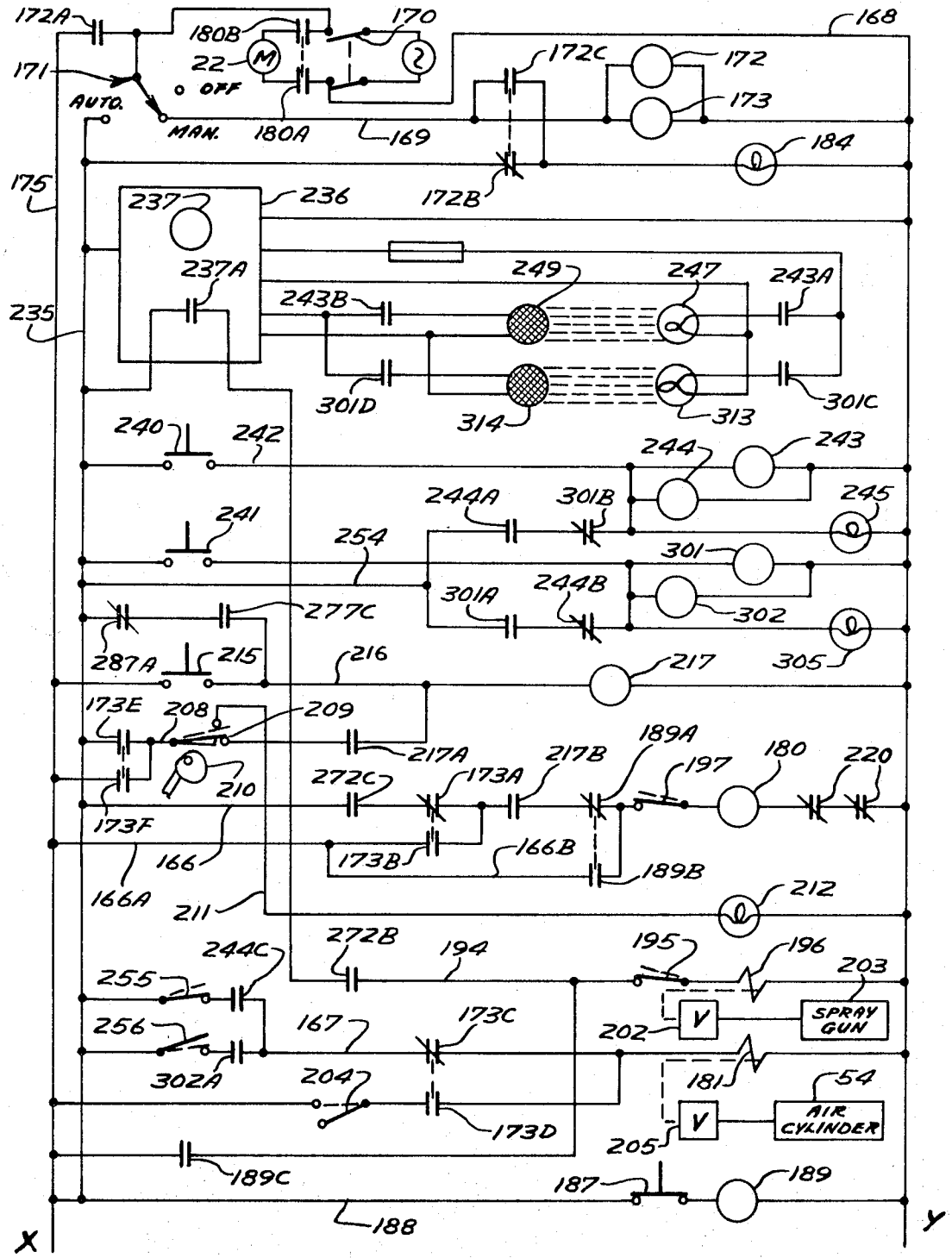

FIG. 12A

INVENTORS
ROBERT S. HEDIN
GLENN R. ROSE

BY

ATTORNEYS

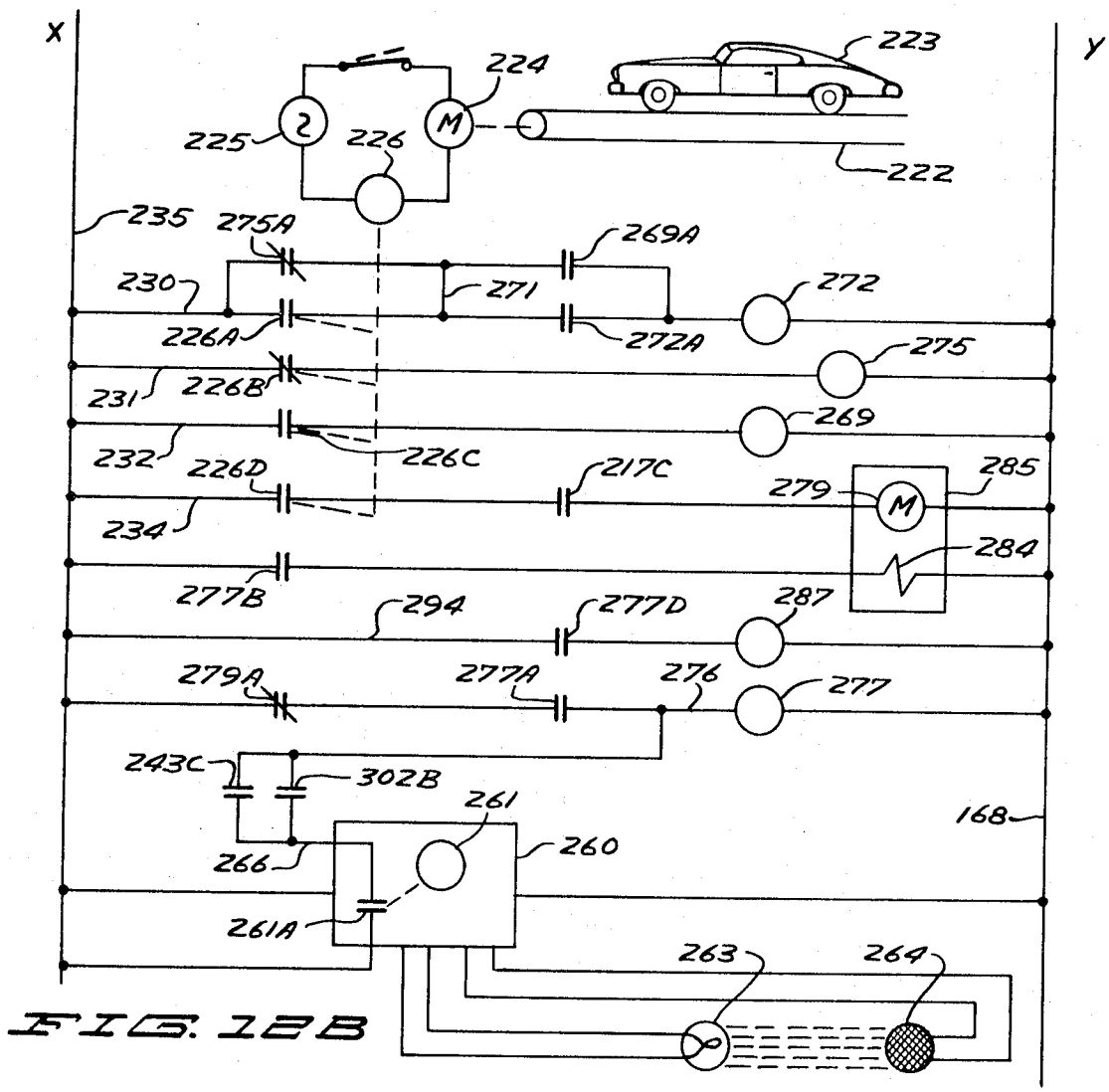

FIG. 12B

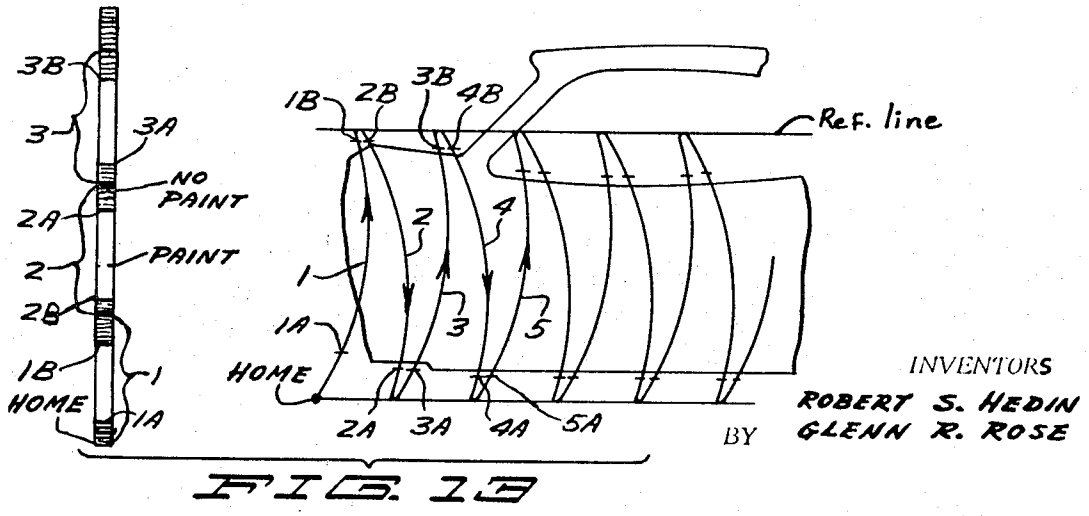

FIG. 13

INVENTORS
ROBERT S. HEDIN
BY GLENN R. ROSE

ATTORNEYS

FIG. 14

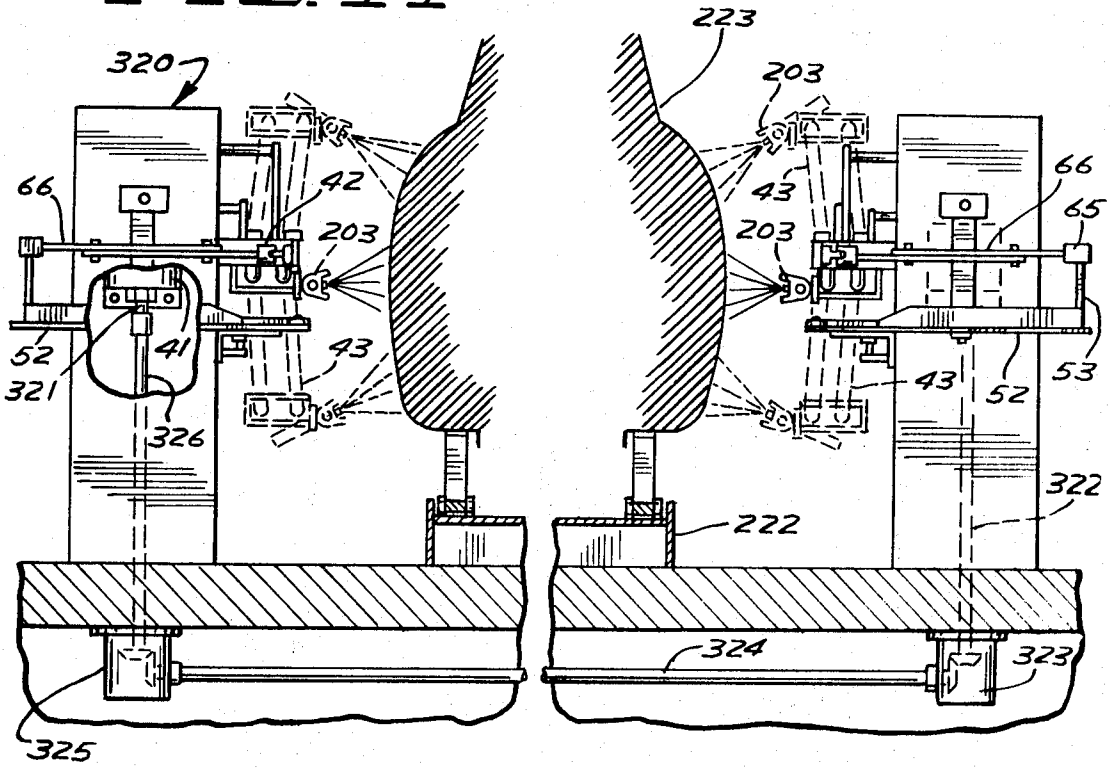

FIG. 15

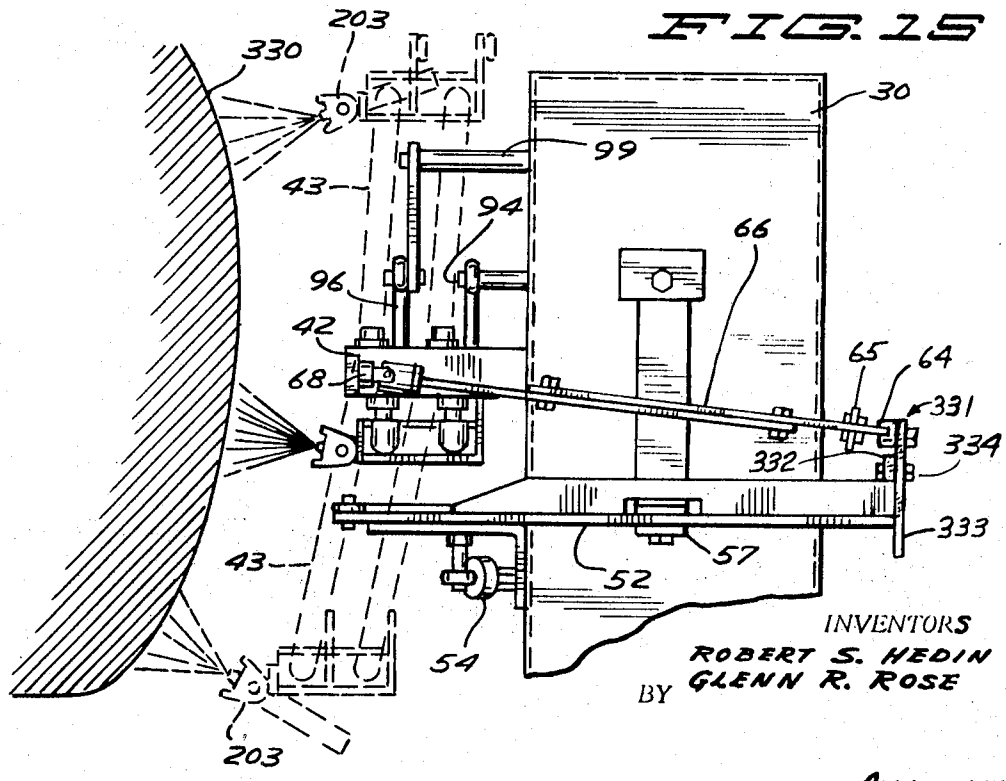

INVENTORS
ROBERT S. HEDIN
GLENN R. ROSE
BY
ATTORNEYS

METHOD OF PROGRAMMING A CONTROLLER

CROSS REFERENCE TO RELATED APPLICATIONS

This application is a division of our copending application Ser. No. 838,020, filed June 19, 1969 for SPRAY PAINTER, now Pat. No. 3,561,389, which in turn is a continuation of our application Ser. No. 561,882, filed June 20, 1966 for SPRAY PAINTER, now abandoned.

SUMMARY OF THE INVENTION

The present invention has relation to a spray painting mechanism and more particularly to a programming and operative system which moves a spray gun in a first direction as an item to be sprayed is moved past the gun in a transverse direction.

The spray nozzle positioning system of the present invention has an arm mounting a spray gun which is reciprocated up and down about an arm axis. The spray arm is linked to a motor driven cam to provide essentially constant velocity of the nozzle over the painted area. Also, linkages are provided to maintain a reference plane of the nozzle spray fan oriented in space despite accurate movement of the spray arm.

Additional mechanism is provided to cause the arm to move in and out in a contoured path to follow approximately the contour of an auto body. The spray painter is designed primarily for use in connection with auto bodies and the contour feature aids greatly in obtaining uniform painting on the body.

A programming drum is utilized which controls the on and off positions of the spray gun. By the use of a plurality of photocells and corresponding preprogrammed control tapes, several different auto body types can be painted interchangeably. The device is programmed so that the paint spray will shut off in the portion of the arm travel where there is no surface to be painted. For example, over the hood and trunk areas of sedans, wheel cutouts, and in the window areas.

The device is made so that each painting cycle consists of 18 complete arm cycles or 36 painting strokes. This corresponds to one revolution of the programming drum. If all the strokes are not used for an auto body, for example, a compact car, the arm completes its full number of strokes to reset the system, but the nozzle would be shut off whenever there was no surface to be painted.

The control system is also designed to permit manual operation or automatic operation, as desired.

It is an object of this invention to present a spray painter which can be programmed for the spraying and painting operation.

It is further object of the present invention to present a spray painter that can be used with automobiles traveling on a conveyor and wherein at least one axis of the spray is maintained parallel to a reference plane at all times during its stroke or cycle.

It is further object of the present invention to present a spray painter for use with automobiles or the like wherein the painting gun can be moved in and out in a contour approximating the contour of a side surface of an automobile.

It is another object of the present invention to present a spray painter wherein the painter can be programmed to stop the paint spray in preselected points of its travel.

Other objects are inherent in the specification and will become apparent as the description proceeds. In the drawings,

FIG.. 1 is an end elevational view of a spray painter made according to the present invention;

FIG. 2 is a top plan view of the painter of FIG. 1;

FIG. 3 is a side elevational view thereof with parts in section and parts broken away;

FIG. 4 is a view taken from the side opposite from FIG. 3;

FIG. 5 is a sectional view taken as on line 5—5 of FIG. 3;

FIG. 6 is a fragmentary perspective exploded view of a control mechanism used to give proper spray gun orientation when contour surfaces are being painted;

FIGS. 7 and 8 are side views of the device of FIG. 6 shown in two different positions;

FIG. 9 is an enlarged fragmentary sectional view of a gear box shaft and drive crank for the spray gun control;

FIG. 10 is a fragmentary enlarged plan view of the spray gun support with parts in section and parts broken away;

FIG. 11 is a sectional view taken as on line 11—11 in FIG. 10;

FIGS. 12A and 12B are schematic representations of the controls for the spray unit;

FIG. 13 is a schematic illustration of a typical painting sequence obtained with the device of the present invention;

FIG. 14 is a part schematic view of a master slave painter;

FIG. 15 is an end view showing a modified contour control.

Referring to the drawings and the numerals of reference thereon, a spray painter assembly illustrated generally at 10 is positioned adjacent a conveyor line (shown only schematically in FIG. 12B) of conventional design on which automobiles 11 or similar objects to be painted are mounted. The automobiles move past the sprayer assembly, and when they are properly positioned with respect to the painter, a photoelectic cell is operated to actuate the sprayer. Cycle "start" and cycle "stop" switches are well known in the art and can be microswitches or other devices as well as photoelectric devices. The spray painter comprises a spraying head assembly 12 of usual air operated design in which solenoid valves control operation which is mounted onto an arm assembly 13 that pivots about a substantially horizontal axis 14 (see FIG. 1) and which will thus basically move up and down in an arc as indicated by arrows 15. The arm assembly is operated about its axis in a manner that will be explained later. Thus, as the automobile moves past on the conveyor in direction as indicated by the arrows 16 in FIG. 2 and the spray gun move up and down, the spray painting actually forms continuous W configuration on the auto body (see FIG. 13) The spray pattern, the speed of movement of the spray gun, and the speed of movement of the conveyor itself are correlated so that the item is completely painted as it passes.

The paint sprayer assembly comprises an outer cabinet 20 in which is mounted a main frame assembly 21. The frame 21 is used for mounting all of the components that drive the spray gun. The frame 21 is used to mount a drive motor 22 which in turn drives through a variable output speed reducer 23 and gear box 24 to rotate a main operating cam 25. The cam 25 is mounted onto an output shaft of the gear box 24 and as shown has an irregular outer periphery. The cam rotates in the direction as indicated by arrow 26. A cam follower assembly 27 is mounted so as to engage the cam and includes an arm 30 which is mounted on a shaft 31 that in turn is rotatably mounted in a pair of bearings 32 which are attached to an upright member on the main frame 21. The arm 30 has a pin 33 at its outer and and a roller 34 is rotatably mounted on the pin and rides against the outer surface of the cam. The cam roller oscillates as it follows the cam surface.

Also mounted at the outer end of arm 30 is a small bracket 35 to which a push link 36 is pivotally mounted. The link 36 is attached to the bracket 31 with suitable rod end spherical bearings conventionally known. The outer end of link 36 is pivotally attached as at 37 to a lever arm 38 which in turn has a hub that is drivably mounted onto an output shaft 40 of gear box 41 which is mounted to the frame 21. The shaft 40 of the gear box is mounted on bearings inside the gear box and it extends through the gear box and out through a wall of the cabinet 20. The painting arm assembly 13 has a hub 42 which is drivably mounted onto the outwardly extending end of shaft 40 outside of the spray painter cabinet 20. The hub 42, as shown, is square in cross section and is bored to receive the shaft. The arm assembly 13 includes two actuating arms 43, 43 pivotally mounted as at 44, 44 about upright axes to the hub 42. The arms 43, 43 are spaced apart and are parallel. The arms are attached to the hub 42 with yokes 45, 45 that are bifurcated to fit over the hub The yokes are fixed to the ends of the arms. The outer ends of the arms 43, 43 are pivotally mounted about axes 46, 46 to the spray head assembly. The axes 46, 46 are parallel to the axes 44, 44 so that the two arms 43, 43 always remain parallel.

The spray gun assembly 12 will be explained more fully later in the specification. The pivotal mountings are merely shoulder bolts 73 fastened to the spray gun assembly and passing through provided housings on the arms 43, 43.

As mentioned previously, the arms 43, 43 move as a unit in up and down direction about the axis 14 of shaft 40. The arms are also controlled so that if desired they can be made to move in and out in an arc as they move up and down. The contour control linkage is illustrated generally at 50, in FIG. 2.

As shown, there is a support arm 51 to which a contour bar 52 is pivotally mounted as at 53. The movement of the contour bar about its pivot 53 is controlled through the use of an air cylinder 54 attached to the frame adjacent the support arm 51 and having a rod attached as at 55 to the contour bar. The contour bar is made so it will slide in direction as indicated by arrow 56 along a support 57 from position against a first stop 58 to a second stop 59. The support 57 is made of two spaced apart bars as shown and the contour arm slides between the bars. The stops 58 and 59 are merely bolts extending through provided slots in the bars making up the support 57 which are tightened onto spacers in the desired position. The contour bar 52 has a leg 62 at the end opposite from pivot 53. The leg 62 is positioned so that it will extend around the end to the side of the housing for the paint sprayer device. The leg 62 in turn has an upright support member 63 fixedly attached thereto.

One end of a small universal joint 64 is attached to the upper end of upright arm 63 and the order end of the universal joint 64 is attached to a lug 65 which extends from a swinging arm 66. The swinging arm 66 is made up of two sections and is longitudinally adjustable in its length as shown. The opposite end of the swinging arm 66 has a lug 67 on which one end of a universal joint 68 is attached. The opposite end of the universal joint 68 is attached to a link 69 which in turn is fixedly attached to the yoke 45 on the outboard arm 43. The link 69 extends outwardly in opposite directions from the arms and thus will move up and down in an arc when the arms move up and down.

The contour movement (or in and out movement) of the spray head, controlled by the arms 43, 43 which will permit the movement of the spray gun to follow the contour of a car as shown in FIG. 1 is controlled by the swinging arm 66. When the arm 66 is in its first stopped position again stop 58, the pivotal axis of universal joint 64 is aligned with the pivotal axis of shaft 40 and the hub 42. When the arms 43, 43 are driven up and down as shown by arrow 15, the arms will not move in and out at all because of the alignment of these axes. The swinging arm 66 and its attached link 69 move as a unit about the same axis as the hub 42. There will be no in and out movement of arms 43, 43.

However, when the contour bar 52 is moved against the stop 59, the axis of the swinging arm 66 no longer aligns with the axis of shaft 40. When the arms 43, 43 move up and down the link 69 also moves up and down and the end of arm 66 attached to the link must follow. Because the swinging arm 66 is attached to the universal joint 64, the end of the arm 66 at link 69 is forced to move in an arc about the pivot of "U" joint 64. The arcuate movement of arm 66 means that the effective length of arm 66 changes in transverse direction. This forces the link 69 to move transversely in and out and thereby move the arms 43, 43 in and out. It, of course, should be noted that the arms 43, 43 remain parallel and the main spray head body axis remains in its initial orientation in transverse direction.

It is desirable to have the spray gun always remain perpendicular to the contour or body surface. Thus where the body is contoured, the angle of the spray axis of the spray gun should change slightly in its vertical plane of movement to remain perpendicular to the surface. This angular change is shown in dotted lines at 72 in FIG. 1. In order to accomplish this, a compensating linkage has been developed. First, in order to understand the linkage, the mounting of the spray gun itself should be explained.

As shown in FIGS. 10 and 11, the spray gun assembly 12 is pivotally mounted about the axes 46, 46 at the outer ends of arms 43, 43. The arms are attached through pins 73 which pass through hubs 74 in the ends of arms 43 and have shoulders thereon so that the arms can pivot on the pins. The pins pass through a main mounting block 75 for the spray head assembly. The outer edge mounting block 75 is bifurcated or relieved and has a first leg 76 and a second leg 77 which are spaced apart. The main frame 75 is used for mounting a gun holder assembly 78. The gun holder assembly has a gun mounting member 79 which comprises an arm having a pin 80 at one end for holding the spray head and having a two piece bifurcated hub 81 which has opposite ends mounted onto aligning coaxial pins 82 and 83. The pins 82 and 83 are attached to a block 84 which in turn is mounted onto a pin 85. The pin 85 is positioned at right angles to the axes of pins 82 and 83. The pin 85 passes through and is rotatably mounted with respect to a tubular housing or sleeve 86 which in turn is rotatably mounted in the second leg 77 of frame 75. The pin also passes through a provided bushing 87 in leg 76 of the frame 75. A bushing is also used inside the housing 86 for mounting pin 85.

A control arm 88 is drivably attached to the other end of the pin 85 and extends upwardly therefrom. The angular position of the spray head about the axis of the pin 85 is controlled through the use of the arm 88 which is attached to a link 89 as at 90. Suitable rod end members are used on the link 89. The opposite end of the link 89 is pivotally attached with respect to the main frame as at 94 (see FIGS. 1 and 5) on a suitable housing or support. The pivot axis of the link 89 and 94 is substantially vertically about the axis of the shaft 40. Thus the link 89 acts as a parallel link to maintain the same angular position of the spray mounting member 79 with respect to a horizontal plane as the arms 43, 43 oscillate up and down. In other words the pin 85 will rotate slightly with respect to its mountings when the arms 43, 43 oscillate up and down, but will thereby keep the orientation of the spray pattern with respect to a vertical or horizontal plane identical throughout the travel of the arms. Even though the spray gun describes an arc as it moves at the outer ends of arms 43, 43 the spray pattern will remain oriented so that its vertical axis initially will remain its vertical axis of the spray pattern throughout the travel. This is important because many times the spray pattern is not circular, but has a longer dimension for example in vertical direction than it does in transverse direction and so the orientation of the spray pattern is important.

Also, a second upper parallel link 96 is positioned to control movement of the spray gun during contour movement of the arms 43, 43. During normal oscillation of the spray arms, without any contour adjustment, the link 96 and link 89 move in exactly the same pattern, and about the same axis of pivot.

The link 96 is pivotally attached at its rear end (see FIGS. 1, 2 and 3) as at 97 to a control arm 98 which in turn is attached to a shaft 99. The shaft 99 is rotatably mounted in suitable bearings 100 above the gear box 41. The movement of the shaft 99 is controlled in a manner which will be explained subsequently. The pivots for the links 89 and 96 are spherical pivots so the links can pivot up and down and in and out as well.

The link 96 is attached at its outer end adjacent the spray gun head as at 101 to a second control arm 102 which in turn is clamped on to the housing 86. The arm 102 controls rotation movement of the housing, with respect to the mounting member 75.

The housing 86 has a gear segment 103 attached thereto for rotation therewith, which is actually a portion or sector of a ring gear and this gear segment 103 meshes with a second gear segment 104 which is integral with the holder member 79 for the spray gun.

The gear segments 103 and 104 control the angular position of the holder member 79 about the pins 82 and 83, and thus control the movement of the spray gun or head in a vertical plane about pins 82 and 83. As stated previously, it is desirable

to have the axis of the spray from the spray gun perpendicular to the surface being painted. Thus if the surface is vertical, the axis of the spray gun nozzle should be in a horizontal plane. However, where there is a contour surface to be painted, the surface deviates from vertical and therefore the axis of the spray gun must deviate from horizontal. The arms **43, 43** will move in and out when properly set to accommodate the contour. When the contour is zero, or in other words when the arms **43, 43** do not move transversely during their cycle, then the spray gun also remains oriented in space and the two links **89** and **96** act as parallel links. The angular position of the spray gun remains the same in space. There is no relative motion between the gears **103** and **104**. The links **89** and **96** both operate about the same axes and control movement of the gun about the axis of pin **85** so that the axes of pins **82** and **83** remain horizontal. Compensation to hold the spray oriented is accomplished by moving the link **96** while holding the link **89** in its normal position to cause the spray gun to tip up or down about pins **82** and **83**. The movement of the link **96** is controlled by the shaft **99** and its arm **98**. In order to rotate the shaft **99** a control yoke **107** is drivably mounted as at **108** to the end of the shaft **99** opposite from arm **98**. The yoke extends downwardly and has a long slot **109** defined therein (see FIG. **6**) A slider **110** is positioned within the slot **109** and is free to slide up and down with respect thereto. The slider is mounted rotatably onto a pin **111** which is press fitted into a second slider **112** that is slidably mounted in a slot **113** of a control yoke **114**. In addition, the other end of pin **111** is rotatably mounted in a third slider **115** that is mounted in an open sided slot **116** defined in a crank **117** that is mounted onto the outer end of shaft **40**. As explained previously, the shaft **40** oscillates back and forth, and when it does this, it will move the crank arm **117**. Depending upon the positions of the sliders **115, 112** and **110** with respect to the axis of the shaft **40**, the crank arm thus determines the motion of the yoke **107**.

The position of the pin **111** with respect to the axis of shaft **40** is controlled by the yoke **114**. The yoke **114** is mounted onto a pair of parallel arms **120** and **121** which are pivotally mounted to the yoke as at **122** and **123**, respectively, and are pivotally mounted onto the frame as at **124** and **125**, respectively. A spring **126** is attached between the yoke and the frame to urge the yoke in downward direction. The movement of the yoke is in turn controlled by a bell crank **127** that is pivotally mounted as at **128** to the main frame, and has a pin **129** that engages the pin used at pivot **123** for the lower link **121** on the yoke. The pin **129** engages the underside of the pin at pivot **123** and the position of the bell crank determines how far downwardly the yoke **114** can travel. When the pins are in engagement and the bell crank is held, the yoke cannot travel downwardly any further.

The position of the bell crank about its pivot **128** is controlled by a rod **112** which is slidably mounted through the sidewall of the frame and is attached as at **133** to an outwardly extending portion of the contour bar **52**. The attachment **133** is positioned on an opposite side of the pivot **53** from the main part of the contour bar. A spring **134** is mounted over the link **132** and urges the link outwardly to return the bell crank to its down position. The link **132** is attached as at **135** to the bell crank **127**.

When the contour bar **52** is in its no contour position as shown in FIG. **2**, the link **132** permits the bell crank to move downwardly and this in turn allows the yoke **114** to move downwardly to position wherein the pin **111**, carried by the slider **112**, is axially aligned with the axis of rod or shaft **40**. (Note that the links **120** and **121** are arranged so that slot **113** remains horizontal). In this position, called the "no contour" position, the yoke **107** is not moved and links **89** and **96** act as parallel arms. Both move about common axes at pivot **94**. The two gear sectors **103** and **104** remain stationary with respect to each other. The links **89** and **96** merely compensate for the arcuate movement so that the axis of the spray gun remains at its normal orientation as the arms **43, 43** and the spray gun oscillate up and down.

When the contour bar **52** is moved to its "contour" position as shown in dotted lines at **140** against the stop **59**, so that the arms **43, 43** are pivoted by the swing arm **66** about their axes **44, 44** and move in and out in a contour pattern, the link **132** is moved inwardly in direction as indicated by the arrow **141**. The pin **129** will then act against the pin at pivot **123** and will push the yoke **114** upwardly. This will move the slider **112** upwardly and, of course, move the pin **111** upwardly. The slider **115** will move in the slot **116**, slider **112** will move the slot **113**, and slider **110** will move in the slot **109** the necessary amount to permit the pin **111** to move away from the axis of the shaft **40** as the yoke **114** moves upwardly.

What this will do is to move the axis of pin **111** and shaft **40** out of alignment to make the crank **117** effective to cause an oscillatory motion of the pin **111**. Because the yoke **114** is held stationary, this motion of the crank **117** will cause the pin to move back and forth in the slot **113** rather than in an arc. The slider **115** of course will slide in slot **116** to permit this.

Movement of the pin **111** and slider **110** back and forth will cause the yoke **107** to move back and forth about the axis of shaft **99** as indicated by double arrow **142**. This in turn will oscillate the shaft **99** and move arm **98** and link **96** back and forth. The arm **102** will rotate, thereby rotating the housing **86** with respect to the shaft **85** which is held by link **89**. Gear **103** on housing **86** will drive gear **104** and thereby rotate the holding member for the spray gun about the pins **82** and **83**. This will cause the axis of the spray gun to change with respect to the horizontal. By proper selection of the lever arm ratios, including the lengths of the yoke **107**, arm **98**, and the spacing of the bell crank pivot on bell crank **127**, the gun tip up can be adjusted to insure that the axis of the spray coming from the gun will be perpendicular to the surface that is being painted. This compensatory effect is necessary only when the contour adjustment is working.

The paint is supplied to the spray gun through usual or preferred devices, and the flow of paint is controlled automatically by solenoid operated control valves. The control of the solenoid operated valves in turn is responsive to a photoelectric control system. In the form as shown, photocells **150** are mounted adjacent a drum **151** which drivably mounted on a shaft **152** that is rotatably mounted on suitable bearings **153** on the main frame. The drum is driven through a chain and sprocket drive **154** to a jack shaft **155** that in turn has a large sprocket **156** which is driven by a chain **157** operating from a sprocket **158** drivably mounted on the shaft for the cam **25**. Suitable chain tighteners can be provided for the chains.

Whenever motor **22** is driven, it will drive the arms with cam **25** and also rotate the drum. The drum is used for automatic operation and the photocells are of a type that respond to reflected light. The cells have a light source that shines toward the drum and also contain in one housing a light sensitive photoelectric cell. Strips **160, 298** of reflective tape are placed on the drum and one is aligned with each photocell. Where the sprayer is to paint, the reflective surface is left. This energizes the aligned photocell to initiate spraying. When there is to be no spraying the tape is painted a light absorbing black. Therefore light will not reflect and the photocell will not operate.

Several photocells and control tapes can be mounted. Each tape would be programmed for a different spraying sequence. However, only one photocell and control tape would be active at one time. This will be better understood after the control circuitry has been explained, referring to FIGS. **12A** and **12B**.

To operate the device, which will operate either in manual or automatic position, a main disconnect switch **170** is closed and power is supplied to the line contacts for the motor and also to a power select switch **171**. The power to the power select switch can be a lower voltage than that used for the motor if desired, and in normal cases the motor will operate on 240 volts while the power select switch will receive only 115 volts. The power select switch **117** gives a choice of either manual or automatic operation, designated MAN and AUTO, respectively.

MANUAL OPERATION

When switch **171** is placed in "Man" position, parallel relays **172** and **173** are energized through line **169**. Line **169** extends from switch **171** to a common return line **168**. The relay coils **172** and **173**, which operate in parallel, apply power to the manual bus or line **175** through the closing of normally open contacts **172A**. Also, normally closed contacts **173A** in a line **166** are opened and normally open contacts **173B** in line **166A** are closed. Normally closed contacts **173C** in line **167** are opened and normally open contacts **173D** in line **167A** are closed. This disconnects a cam drive motor relay **180** in line **166** and a contour solenoid coil **181** which is in line **167**, from the automatic operation bus or line.

Also coil **172** causes normally closed contacts **172B** to open and normally open contacts **172C** to close, thereby illuminating the indicator lamp **184** to show that power is on.

Then, upon depressing the manual spray pushbutton **187** in a line **188**, a relay **189** is energized. This will open normally closed contacts **189A** in line **166** and close normally open contacts **189B** in line **166B**, which in turn is connected between line **166A** and line **166**. The relay **189** also closes normally open contacts **189C** in a line **193** which connects to a main line **194** leading through a closed manual cut out switch **195** to a spray gun control solenoid coil **196**.

The relay **180** will be energized through lines **166A**, **166B** and a closed manual cut out switch **197**. This will close contacts **180A** and **180B** in the motor circuit to energize the cam drive motor **22**. This will initiate the oscillation of the paint spraying arms **43**, **43** through the previously explained mechanism.

At the same time, with switch **195** closed, solenoid **196** is energized and this will in turn operate a suitable valve or valves illustrated schematically at **202** to in turn actuate the spray gun **203** of the assembly **12**, to initiate the spraying operation. Then, under this manual operation, the arm will move up and down as previously described and the paint will be sprayed onto a car or other object traveling past on the conveyor, as long as the button **187** switch depressed. The spray gun can be stopped by opening switch **195**. Thus, manually, without affecting the drive to the arms, certain areas can be left unpainted.

If a contour is desired, a manual contour select switch **204** in line **167A** is moved to its position shown in dotted lines. This then will energize solenoid **181** through contacts **173D** (which are now closed) which in turn will actuate valve **205** which in turn will direct air under pressure to the cylinder **54**. This will move the contour bar **52** to its outward stop position against the stop **59** and cause the spray arms to move in the predesired contour as previously described. When deenergized, the solenoid coil **181** relaxes and permits the air cylinder **54** to move so that the contour bar is in its "no-contour" position. The spraying continues as long as switch **187** is closed. When opened, the motor **22** stops and the spray gun **203** quits spraying paint.

Before attempting automatic operation, the control drum **151** must be in its start position. This is indicated as follows. When the selector switch **171** is placed in manual position and relay **173** is energized, in addition to the contacts already mentioned, the relay will open normally closed contacts **173E** and will close normally open contacts **173F**. The contacts **173E** are in a line **208** in which a normally closed microswitch **209** is placed. The microswitch **209** is operated from a cam **210** shown schematically in FIG. **12A** and driven by the shaft **152** for the programming drum of the unit. When the drum is in its home position the cam **210** will open the normally closed contacts of switch **209** and connect line **208** to a line **211** in which an "auto ready" indicator light **212** is wired. When the light **212** is lit, it is known that the programming drum is at its start or home position.

If it is not properly set, the programming drum can be reset to its starting position by pushing a switch **215** which will connect a line **216** to the manual bus bar or line **175** thereby energizing a relay **217**. Relay **217** closes normally open contacts **217A** in line **208** and also closes normally open contacts **217B** in line **166** leading to the coil **180**.

The push button **187** will not be depressed because there will be no manual spraying at that time, so normally closed contacts **189A** will be closed. The relay **180** will be energized through line **166A**, contacts **173C** which will be closed, contacts **217B** which will be closed, and normally closed contacts **189A**, closed switch **197** and then through the overload contacts provided, as shown at **220**. Energizing the relay **180** again will start motor **22** to drive the drum to its home position. The drive will be locked on through the contacts **217A**, switch **209** and contacts **173F** until the cam **210** opens the microswitch **209** and closes its normally open contact illuminating the indicator light **212**. Once the switch **209** opens in line **208**, then relay **217** is no longer energized (contacts **217A** will then open) and the motor relay **180** will also be relaxed because contacts **217B** will open.

A dynamic brake is utilized in motor **22** and is automatically energized to bring the system to a quick stop.

The unit can be operated by pushing the manual pushbutton **187** in order to, as previously described, operate the spray gun and drive motor **22** for the spray arms. If the switch **204** is properly set, the contour solenoid coil **181** will be energized to in turn actuate the cylinder **54** for moving the contour bar.

AUTOMATIC OPERATION

The unit is designed primarily to run automatically. The device is synchronized and interlocked with a conveyor on which the autos to be painted are mounted. Referring specifically to FIG. **12B** and the schematic representation in the upper part of the FIG., a conveyor **222** of known design is used for moving an automobile **223** past the spray painting mechanism. A conveyor drive motor **224** is used for driving the conveyor **222** and is powered through a source of power **225**. An electrical interlock is utilized between the drive for the conveyor **222** and the controls for the paint sprayer. This interlock is actuated through the use of a relay **226** in the conveyor motor circuit which controls contacts **226A** that are normally open, normally closed contacts **226B**, normally open contacts **226C** and normally open contacts **226D**. These contacts are in lines **230**, **231**, **232** and **234**, respectively. The coil is related to these contacts with the dashed line in the schematic drawing.

Thus, when automatic operation is to be effected with the main power switch **171** on, the power selection switch is turned to the "AUTO" position and this energizes an automatic bus bar or line **235**. It also cuts off the line or bus bar **175** for manual operation because the relays **172** and **173** are deenergized opening contacts **172A** and also permitting the contacts **173A–F** and **172B** and **172C** to go to their normal positions. As soon as the line **235** is energized, the power "on" indicator lamp **184** will be illuminated through normally closed contacts **172B**. In addition, a main control photoelectric unit **236** is energized. The photoelectic unit is a unit made up of a usual design according to well-known principles and has a relay **237** internally which operates contacts **237A** and closes these contacts when it is energized. The relay **237** is connected through suitable circuitry so that it is energized in response to light actuating one of the photoelectric cells **150**.

The painting program for each automobile body is on one annular row or ring **60** of tape having intermittent reflective surfaces. The photocells **150** are highly discriminative and will only respond to the reflections from the tape in the annular row with which they are aligned so that the complete painting program for one automobile body is in an annular row around the drum and the painting is effected when the photocell is aligned with one of the reflective sections.

While several different auto bodies can be programmed interchangeably on the programming device, the present disclosure illustrates only two such programs. It is to be understood that others can be added if desired merely to providing the necessary relays, interlocks and pushbuttons for selecting the type of car body to be painted.

For example, with a sedan 223 on the conveyor, selection is made by pushing the proper "type select" button, either 240 or 241 (FIG. 12A) just below relay 236. Assuming that the type selection button 240 is the one for this type of automobile, the button is pushed completing a circuit through line 242. This in turn energizes relays 243 and 244 and lights a "-type indicator" light 245. Coil 243 closes normally open contacts 243A and 243B which then activates a light source or lamp 247 and a photoelectric cell 249 through unit 236. Further relay 244 closes normally open contacts 244A and opens normally closed contacts 244B. The opening of contacts 244B opens the circuit to the other "type select" system shown, and the closing of contacts 244A locks the relays 243 and 244 in energized position through line 254. In addition, if the type of body, for example the sedan shown, controlled by pushbutton 240 has a contour surface that has to be painted, a manual contour select pushbutton switch 255 is closed (near bottom of FIG. 12A). A second contour select switch 256 goes in conjunction with "type" switch 241 and operates in the same manner, but will remain open. Relay 244 also closes a set of normally open contacts 244C to connect line 167 through switch 255 to the bus bar 235 and thus solenoid coil 181 is energized through contacts 173B which are normally closed. The air valve 205 is actuated and cylinder 54 moves the contour bar 52 to its proper position.

Referring to FIG. 12B it can be seen that the energizing of bus bar or line 235 also energizes a "paint start" photoelectric unit 260. The paint start photoelectric unit has a relay 261 which, when energized will close normally open contacts 261A which are connected through a line on one side thereof to the bus bar or line 235. The photoelectric unit 260 is controlled from a light source 263 that is illuminated whenever the unit 260 is energized and the energization of coil 261 is designed to occur when light from the light source 263 no longer reaches a photoelectric cell 264. The light source 263 and cell 264 are positioned on opposite sides of the conveyor 222 so that when an automobile is positioned between the light source and the photocell, relay 261 will become energized closing contacts 261A. In addition, relay 243, which was energized at the time pushbutton 240 was depressed, and remains energized through closed contacts 244A (locked on), will close a set of contacts 243C positioned in a line 266 leading from contacts 261A.

Energization of relay 226, when the conveyor 222 starts closes contacts 226C as previously explained, then connects an adjustable time delay relay 269 to power. The relay 269 is made so that its coil will not operate until a predetermined time after energization. During this time the conveyor motor 224 will run and will be permitted to take up slack in the conveyor which normally occurs. The relay 269 will be timed so that it will energize after the slack has been taken out and as soon as the car 223 starts to move. When the relay 269 operates it will close contacts 269A thereby completing a circuit through contacts 226A (which will be closed when relay 226 is energized), and a connecting line 271 to a relay 272. When relay 272 is energized, it closes contacts 272A and also closes normally open contacts 272B in line 194 leading from the photorelay unit 236 (FIG. 12A) to the relay 196 that operates the spray gun. This will make the operation of the spray gun dependent only upon the closing of contacts 237A in response to energization of relay 237 in the photorelay 236. The relay 272 also closes contacts 272C in line 166 (FIG. 12A). The relay 272 locks on through its contacts 272A, line 271 and normally closed contacts 275A which bypass contacts 226A. Then, once the auto 223 intercepts the light coming from light source 263 to photoelectric cell 264, relay 261 will be energized and contacts 261A will close. This will transmit power from line 235 through contacts 261A, line 266, contacts 243C (which were closed by relay 243 FIG. 12A) to the line 276 and thus to energize the relay 277. Relay 277 controls the start of the paint spray gun. It closes a pair of contacts 277A in line 276 to lock on through normally closed contacts 279A which are connected to line 235. Coil 277 also closes normally open contacts 277B which energizes a coil 284 to engage a clutch in an automatic adjustable timer 285. Referring back to FIG. 12A, the relay 277 also closes normally open contacts 277C which connect line 235 through normally closed contacts 287A to line 216 thereby energizing relay 217. This coil 217 closes contacts 217A and 217B (as previously described) completing a circuit through line 166, contacts 272C, which were closed by coil 272, normally closed contacts 173A, contacts 217B, normally closed contacts 189A and closed switch 197 to energize the motor control relay 180 and thereby start motor 22 to rotate the drum. As the drum 151 rotates, portions of a strip 160 of reflective tape will pass over the photoelectric cells 150 and light from lamp 247 will be reflected by the reflective portions of the tape to energize the photoelectric cell 249 thereby energizing relay 237 and closing contacts 237A. This will transmit power from line 235 through line 194, switch 195 and closed contacts 272B to start the spray gun 203 by energizing the coil 196 which controls the valve to the spray gun.

It should also be noted that the energization of coil 217 closes contacts 217C (FIG. 12B) which lead to a timer motor 279 in timer 285. The timer is set for a fixed period of time which corresponds to the length of time to travel between car bodies. Once started, the unit will be locked on and not responsive to photocell 264. This will help prevent false starts between bodies. The timer deactivates the unit shortly before a new body aligns with light 263 and cell 264.

During the time that the drum is rotating, the dispensing of paint through the spray gun is controlled only by the photoelectric cell 249 and lamp 247 on their counter parts which in turn are controlled by the reflective sections of tape on the drum. The paint cycle will shut on and off in a sequence that can be predetermined by programming the tape on the drum.

When relay 277 (FIG. 12B) is energized, it also closes normally opened contacts 277D in a line 294 and this supplies power to a slow operated time delay relay 287. Once this relay 287 energizes, after contacts 277D close and thus after the drum has been rotated for a short time (relay 277 is not energized until the drum is driven), the relay 287 opens normally closed contacts 287A (FIG. 12A) thereby disabling the direct connection from line 235 to line 216 and relay 217. However, the delay before relay 287 is energized is sufficient to permit the cam 210 on the shaft for the drum 151 to move to position to permit the switch 209 to move to its normally closed position thus completing a circuit through normally closed contacts 206, switch 209, contacts 217A and thus to line 216 and relay 217. The relay 217 is then locked on until the cam 210 rotates sufficiently far to open switch 209. This will only occur after the complete cycle of the drum has been made. When the switch 209 again opens, the drum will be stopped because relay 217 will relax opening contacts 217B in the circuit for motor 22.

Relay 277 remains locked on until the time period set on timer 285 elapses. At which time the timer opens contact 279A thus breaking the circuit to relay 277 and releasing all its contacts. The releasing of coil 277 and contacts 277B resets the timer clutch internally and also releases relay 287 (contacts 287A closed) in preparation for the next automatic start which will be triggered by an auto coming between light source 263 and photoelectric cell 264.

If the conveyor interlock system for motor 224 indicates a conveyor stoppage, the coil 226 is deenergized releasing contacts 226A, 226B, 226C and 226D. This will permit contacts 226B to close energizing a relay 275 in line 231 which controls contacts 275A that are used to lock on relay 272. Relay 275 is a slow operating adjustable relay which will permit the sprayer to operate while the conveyor coasts to a stop. The contacts 275A remain closed to keep the painting circuits operating until enough time has elasped so that the conveyor does stop. After the predetermined length of time has elasped, contacts 275A will be opened breaking the circuit to relay 272 and thereby opening contacts 272A and 272C, immediately stopping the motor 22 for the drum and paint sprayer and also

disabling the solenoid operating the spray gun. The time lapse before relay **275** is energized after relay **226** relaxes can be adjusted to permit this coasting stop of the conveyor.

If the automobile on the conveyor is of a different type having a different tape program on the drum, button **241** would be depressed in place of button **240** and this would energize relay **301** and **302** which would operate contacts **301A** and **301B** disabling the previous circuit connected through button **240** and energizing a light **305** to indicate that this is the circuit operating. In addition, if the type of automobile body being painted has a contour, the switch **256** would be closed and relay coil **302** would operate contacts **302A** to complete the circuit previously made through contacts **244C** to actuate the coil for the air cylinder **54** operating the contour bar. Relay **302** would also close normally open contacts **302B** (FIG. 12B) which would connect line **266** to line **276** in the same manner that contacts **265** made this connection. In addition, contacts **301C** and **301D** would be closed by coil **301** energizing light source **313** and photoelectric cell **314** which would now control coil **237** and contacts **237A** in place of the photoelectric cell and light source **247** and **249**, respectively.

The rest of the operation would take place exactly the same way, because contacts **302B** would just take the place of contacts **243C** and the on and off control for the paint spray gun itself would be actuated by the photorelay **236** but would be controlled by the different programming of the tape **298** which reflects the light from source **313** and thus operates photoelectric cell **314**. Thus the programming could be different from this different type of body.

In FIG. **13**, the pattern made on the auto body as it passes the paint gun is shown. Also, in conjunction therewith is shown a tape strip **160** to give the desired operation. The spray gun makes a "W" configuration as shown. Its home position is at the bottom of line **1**. The tape home position is also at the bottom. When the cam **25** starts, drum **151** also starts rotating. The spray gun is not turned on until the gun reaches the bottom of the auto body **1A**. At **1A** the tape reflective portion **1** will cause painting. Painting will stop at **1B** when a dark portion of the tape passes in front of the photocells. This corresponds to **1B** on the auto body. Thus the tape is programmed to start and stop painting at desired points. The program can be placed on the tape prior to the time the tape is put on the drum.

The layout of FIG. **13** shows the start and stop positions on each of the strokes of the painter, **2A**, **2B**, **3A**, **3B**, etc. The painter is programmed for 36 strokes or 18 complete cycles. The tape is then divided into 36 portions, shown as 1, 2, 3, etc. by actual measurement from the reference line to the shut off and turn on marks on the cycle. These marks can be placed on the tape. Of course the different scales can be compensated for very easily.

It should be noted that because of a time lag between the shutting down of the solenoid controlling the spray gun and the actual stopping of the dispensing of paint, and conversely a time lag between the time the solenoid is energized and the time paint actually starts to be dispensed, the actual operation or actuation of the photocell will either lead or lag the position of the spray gun. The "shut off" and "turn on" marks are depicted by the small cross marks at **2A** and **2B** for example. The marks indicate the points at which photocell is either energized or deenergized and it can be seen at these points that they do not correspond exactly with the peripheral edges of the car. This adjustment is made to make sure that the painting occurs at the right instant even though there may be delays in the system.

The tape can easily be preprogrammed. This is essentially a drafting procedure. The path of the spray gun in relation to an item on the conveyor is reproduced as shown in FIG. **13** to exact scale. The path representation, of course, is dependent upon the conveyor speed which must be preselected. The pattern would be different at different conveyor speeds. With a spray for width of 1 foot, the conveyor speed in feet per minute must equal the arm speed in cycles per minute. This is shown in FIG. **13**. A scale model of the template of the auto body to be painted is superimposed over or under the scale layout depicting of the nozzle travel.

The template is positioned so that it is in proper relation to the position of the "start" photocells **263–264**. Marks are then made on each stroke to indicate the turn on and shut off points. The turn on and shut off points are compensated for contour, time lag and other factors affecting the particular system. The distance between the actual stroke marks will represent the portion of the stroke during which the gun will be turned on. The corresponding information can be transferred to the tape, starting at the home position. The scale can be chosen to fit the particular situation. Inasmuch as the peripheral distance of the drum is known, and the painting sprayer is set so that 36 strokes make a complete painting cycle, it is known that each stroke will represent 10° on the periphery of the drum. Thus, by knowing the portion of each stroke during which painting is to occur, the tape can be accurately marked at the turn on and shut off points for each stroke. Adjustments for contour painting and system lags can be made merely by changing the on and off points to suit. This also can be graphically done. Then the portions where there is to be no paint dispensed will be blackened with a light absorbing or flat black lacquer or paint. The information can be obtained by measuring the distance to each turn on and shut off point on each stroke from reference lines L_1 and L_2 and the measuring of a corresponding amount on the tape, and marking it. The reference lines represent the end and beginning of each stroke.

Once the tape has been completely marked as desired to accommodate the different auto bodies being painted, it will then be transferred onto the drum aligned with one of the photocells. The use of a pressure sensitive tape permits removal of the tape for marking the program onto the tape when it is lying flat. This simplifies the task of marking the program. Also the tapes can be easily changed, if desired, for easy removal, only the ends of the tape need to be fixed to the drum.

It should be noted that the photocells **150** each comprise a unitary light source with a photosensitive cell. The light sources are concentric with the photosensitive cell and will project a light beam up against the tape. In the reflective portions the light will be reflected back to the photosensitive cell causing energization of that particular unit. For example, one of the photocells **150** would be represented on the schematic drawing **12A** by light source **247** and photocell **249**.

While the specific example shown has been in regard to painting of automobiles with the gun traveling in an up and down direction, it should also be noted that the same principle of utilizing parallel linkage to maintain the orientation of the spray throughout the arm travel can be used to great advantage in painting flat surfaces which are horizontal. In this instance, the horizontal surface member would be carried past the sprayer, and the sprayer would move transversely above or below it. Holding the spray gun oriented permits an even application of paint across the entire surface of the device being painted.

As the cam **25** rotates, the roller **34** rides along its surface. This actuates the push link **36** and oscillates arm **38** and shaft **40**. The shaft is returned down by gravity.

It should also be noted that spherical seats on the rod ends links **89** and **96** permit the links to swivel in and out for contour operation, as well as pivot up and down.

The contour linkage, **50** in FIG. **2** and in particular swinging arm **66**, can be adjusted in length to accommodate cars of different widths. Shortening the arm **66** (the arm has two sections held by bolts in slotted holes) has the effect of moving the spray head inward toward the car. Because of the differences in lever arms about the pivots **44**, a small adjustment of the arm **66** causes a relatively larger movement of the spray head. As shown on the drawings, the adjustment of the contour links is done manually by means of the bolts and elongated slots shown. The adjustment for various car widths

could also be done automatically by including an air cylinder in the arm **66**. With the air cylinder extended, the spray head would be in position for wide cars, and with it retracted, the spray head would be in position for narrow cars. The air cylinder would be controlled at the time the "car type" is selected, in a manner similar to which the "contour-select" air cylinder is controlled. The pushbutton and solenoid controls would be added to the electrical circuit in the same manner.

In the operation of the paint sprayer of the present invention, it is desirable to paint two sides of an automobile at one time. As shown in FIG. **14**, in part schematic form, two paint sprayer assemblies are positioned on opposite sides of the conveyor line and are simultaneously operated to enable painting both sides of an automobile at once. The unit described in detail in this specification is considered to be the master unit and the unit indicated at **320** is a slave unit that duplicates the motions of the master. Only one set of controls is utilized, however, and when necessary, for example the spray gun control, the controls are merely hooked in parallel so that both spray guns are operated at the same time from the same signal.

In order to operate the master and slave arms mechanically in their oscillation, and in synchronization, the gear box **41** as shown in FIG. **5**, has a downwardly depending shaft **321** which is driven through bevel gears from the shaft **40** inside the box **41**. The driving of shaft **40** has previously been explained. The shaft **321** on the master is coupled to an elongated shaft **322** that extends downwardly through the cabinet for the sprayer and through provided openings in the floor below the sprayer cabinet and extends into a first gear box **323**. The first gear box **323** is mounted in any suitable manner below the floor and is a right angle drive gear box. An output shaft **324** extends transversely underneath the floor and across the width of the conveyor **222** and automobile **223** thereon. Shaft **324** drives a second gear box **325** that is also positioned beneath the floor directly below the slave sprayer unit **320**. An output shaft **326** extends upwardly from this right angle gear box **325** and is coupled to the shaft **321** of the gear box **41** in the slave unit **320**. Thus the shaft **321** in the unit **320** becomes the drive shaft and will, upon rotation, drive the shaft **40** in gear box **41** of the slave unit. This will cause the arms to oscillate at the same time that the arms of the master unit are operating. Likewise, the same parallel linkage is utilized with the arms of the unit **320** and gun tip up is controlled in the same way from the main shaft **40** of this unit. Synchronization is accomplished by setting both sets of arms at their home positions and connecting the drives.

Only one programming drum is necessary because the controls all run from the master unit and thus the slave merely duplicates the movement of the master unit and is made to paint the opposite side of the automobile from the master.

It is to be noted that the contour linkage can be operated on the slave in the same manner and merely by having parallel controls for the air cylinder.

In FIG. **15** a slightly modified attachment for the contour bar is shown to give a different type of contour at the top of the stroke than at the bottom. As previously explained, by moving contour bar **52** out from alignment of the axis of the shaft **40**, there will be an equal amount of contour above and below the center of the stroke of the arms. However, by lowering the pivot axis of the swinging arm **66**, at the same time the contour bar **52** is moved outwardly, the amount of contour can be changed so that there is less contour at the top and more contour at the bottom of the automobile illustrated at **330**. This is done by making the arm **63** adjustable. As shown in FIG. **15**, this arm is now numbered **331** and has two sections **332** and **333** that are joined together by bolt means **334** extending through provided upright slots in the two arm sections. Lowering the pivot of universal joint **64** will skew the contour of the spray arms about their pivots, as shown. This aids in matching the contour of automobiles presently being made. Thus by lowering the pivot of the swinging arm below the pivot axis of the oscillating paint arm **43**, a greater amount of contour can be made at the lower end of the arm arc. By raising this pivot axis, a greater amount of contour can be made at the upper or top part of the stroke of the arms **43**.

It should also be noted that this adjustment can be made with an air cylinder in place of the two sections **331** and **332** of the upright arm. An air cylinder control could be added just as the controls for the contour bar is presently accomplished. Merely by pushing a button, the skewing of the contour can be made by either raising the effective pivot of the swinging arm **66** above the pivotal axis of the painting arms.

What is claimed is:

1. A method of programming a controller which shuts off and turns on a dispensing unit which dispenses material on an object passing by the unit as the unit oscillates in direction transverse to the direction of movement of the object, said controller comprising control means controlling dispensing through a complete, known cycle of the dispensing unit, including the steps of:

making a scale drawing of the developed path of the oscillating unit during an operative cycle,

superimposing a drawing of the object on which the material is to be dispensed at the same scale as the drawing of the developed path,

marking on the drawing of the developed path the points where the dispensing should start and stop,

dividing the control means into sections corresponding to each of the strokes of the unit during its cycle,

placing start and stop indicia on the control means in each of the sections in position corresponding to the position of the marks on the scale drawing.

2. The method of claim **1** and the further step of adjusting the stop and start marks on each section to compensate for operative lags in the dispensing mechanism.

3. The method of claim **1** wherein the control means includes a drum, a light reflective tape on the drum, a photocell means responsive to the reflective portions of said reflective tape to control dispensing, and including the further step of darkening the areas on the tape with a nonreflective material where no material is to be dispensed.

4. The method of claim **3** including the step of laying the tape on a flat surface for marking the stop and start points, then placing the tape around the periphery of the drum in proper position and adhesively fastening it in place.

* * * * *

PO-1050
(5/69)

UNITED STATES PATENT OFFICE
CERTIFICATE OF CORRECTION

Patent No. 3,619,311 Dated November 9, 1971

Inventor(s) Glenn R. Rose et al

It is certified that error appears in the above-identified patent and that said Letters Patent are hereby corrected as shown below:

Column 1, line 6 "3,561,389" should be--3,561,398--; Column 1, line 50 after "is" insert--a--; Column 1, line 55 after "is" insert--a--. Column 2, line 33 "move" should be --moves--; Column 2, line 51 "and" (first occurence) should be --end--; Column 2, line 72 after "hub" insert--period (.)--. Column 5, line 53 "112" should be--132--. Column 7, line 39 "switch" should be--is--. Column 8, line 63 "60" should be --160--; Column 8, line 73 "to" should be--by--.

Signed and sealed this 25th day of April 1972.

(SEAL)
Attest:

EDWARD M.FLETCHER, JR.
Attesting Officer

ROBERT GOTTSCHALK
Commissioner of Patents