E. E. SLICK.

METALLIC RAILWAY TIE.

APPLICATION FILED DEC. 2, 1913.

1,088,106. Patented Feb. 24, 1914.

Fig. 1.

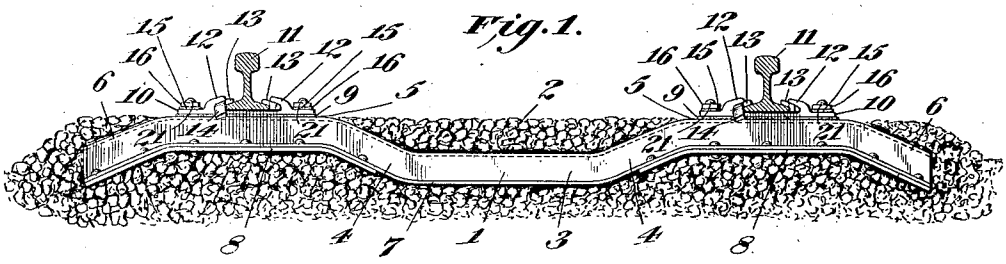

Fig. 2.

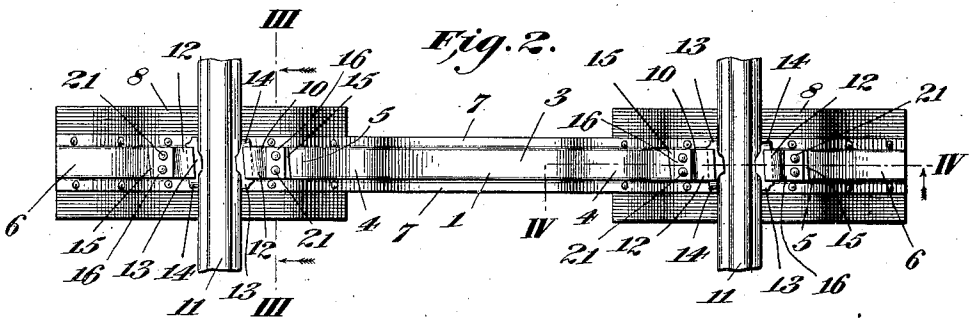

Fig. 3.

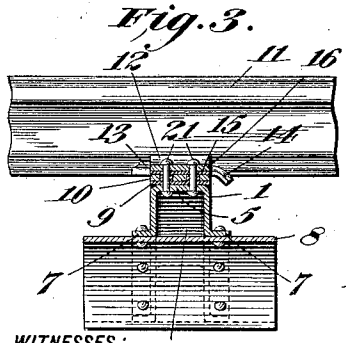

Fig. 4.

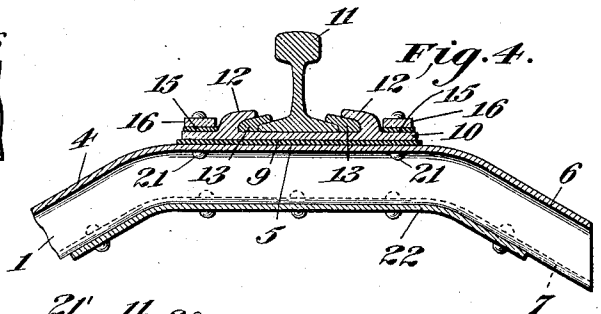

Fig. 5.

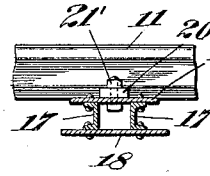

WITNESSES:

Elmer Seavey

E. M. Dawson

INVENTOR

Edwin E. Slick.

BY

Geo. E. Thackray

his ATTORNEY

COLUMBIA PLANOGRAPH CO., WASHINGTON, D. C.

UNITED STATES PATENT OFFICE.

EDWIN E. SLICK, OF WESTMONT BOROUGH, PENNSYLVANIA.

METALLIC RAILWAY-TIE.

1,088,106. Specification of Letters Patent. Patented Feb. 24, 1914.

Application filed December 2, 1913. Serial No. 804,148.

To all whom it may concern:

Be it known that I, EDWIN E. SLICK, a citizen of the United States, residing in the borough of Westmont, (whose post-office address is Johnstown, Pennsylvania,) in the county of Cambria and State of Pennsylvania, have invented certain new and useful Improvements in Metallic Railway-Ties; and I do hereby declare the following to be a full, clear, and exact description of the invention, such as will enable others skilled in the art to which it appertains to make and use the same.

My invention relates to improvements in metallic railway-ties and comprises a tie which can be constructed of rolled or pressed metal shapes in such a manner that it will have the proper conformation, rigidity and elasticity to meet the service conditions to which it will be subjected, while at the same time, the materials of which it is composed are economically arranged with due regard to the stresses in use.

One of the objects of my invention is to construct a cross tie having downwardly bent ends and central portion, thereby providing rail seats elevated above the other parts of the tie, whereby the ballast may be tamped below the ties to support them and by reason of their conformation they will resist lateral movement and maintain the track in alinement. On the top of each tie at the rail seat portion is mounted the rail fastening devices, and I also make the bases of the ties under and near the rails broader than the other parts of the tie to provide ample bearings on the ballast or road bed.

Another object of my invention is to provide a structure which can be firmly seated in the ballast of the road bed and thereby better adapted to prevent creeping or movement either longitudinally or laterally thereof.

A further object of my invention is to reinforce the top and bottom portions of ties by means of the tie-plates and the bottom base plates, with the additional result that the body portion of the tie serves to prevent its longitudinal movement with respect to the track. It will thus be seen that the lower side portions of the upward extensions prevent lateral movement of the ties and track.

Another object of my invention is to construct the tie in such a manner as to insure track drainage, and to have all parts of the ties requiring inspection, easily accessible so as to be seen by the track inspector while standing.

My invention also consists in the novel constructions, combinations and arrangements of parts such as will be hereinafter more fully described and pointed out in the appended claims. Referring now to the one sheet of drawings which forms part of this specification and in which similar reference characters designate corresponding parts: Figure 1 is a side elevation of my improved railway-tie showing it embedded in the ballast of the road bed with the rails attached thereto shown in transverse section. Fig. 2 is a top plan view of my railway-tie showing portions of the rails attached thereto. Fig. 3 is a vertical transverse sectional elevation on an enlarged scale taken on the line III—III of Fig. 2. Fig. 4 is a vertical longitudinal sectional elevation on an enlarged scale of one end of the tie taken on the line IV—IV of Fig. 2, the bottom plates of which are shorter and do not extend to the ends of the ties as they do in the other illustrations. Fig. 5 is a modified form of my improved tie constructed with channel side portions connected by plates riveted to the top and bottom flanges as shown.

Referring to Figs. 1 to 4 inclusive:—1 indicates the tie as a whole, and 2 the ballast of the road bed in which it is embedded. The body of the tie is made from a rolled or pressed metal shape of channel form with outstanding flanges. The tie is formed with a central horizontal depressed portion 3 integral with the upwardly inclined portions 4, the raised rail seat portions 5 and the downwardly bent outer ends 6. The downwardly bent outer ends 6 of the tie, the upwardly inclined ends 4 and the raised seats 5 together give the end portions of the tie an upwardly projecting conformation as viewed in elevation as shown plainly in Fig. 1. A flange 7 extends outwardly from each of the legs of the inverted U-shaped body portion along the entire length of the tie and to the under side of each of the end portions of the tie, and attached to the flanges 7 by means of rivets, is a base plate 8 which is bent to conform to the outline of the under side of the tie, but preferably of slightly less length than the said upwardly projecting portions, as shown in Figs. 1, 2 and 3. The base plate 22 as shown in Fig. 4, does

not extend to the end of the tie and in this form the base plate extends for a substantially equal distance in each direction from the center of the rail. As shown in Figs. 1, 2 and 3, the base plates extend substantially to the ends of the tie to thereby give substantial support on the ballast and prevent rocking due to passage of trains. However, for certain uses, base plates of the length shown in Fig. 4 will suffice.

The base plates 8 and 22 are of considerably greater width than the body of the tie and are located beneath the rail seats to provide ample bearings both vertically and laterally on the ballast or road bed. These base plates may be so proportioned and the ties so spaced that the bearing area and support on the ballast is equal to or greater than that of other ties, either cross ties or longitudinals, so that my arrangement affords ready means for adjusting the carrying capacity as may be desired. Upon each of the raised rail seats 5 is laid a strip of insulation 9 over which is mounted the tie plates 10 on which rest the rails 11, which rails are clamped thereon, between the lugs 12 formed integrally on the tie plates 10, by means of tapered locking bars or wedges 13, each of which, when driven into place has its forward or smaller end 14 bent downwardly to prevent it from becoming accidentally withdrawn.

15 indicates a strip of insulation laid over the ends of the top face of the tie plates 10, and 16 are washer plates. The washer plates 16, insulating strips 9 and 15 together with the tie plates 10 are secured to the top of the raised rail seats 5 by means of bolts or rivets 21. The device for fastening the rails to the ties forms no part of the present invention, being covered by my former Patent No. 950,080, dated February 22, 1910, for rail-fastening, and further detailed description of this fastening means is not considered necessary in this application.

In Fig. 5 I have shown a modification, in the construction of the tie, in which I use two small rolled channels for the sides of the body portion of the tie disposed with their webs vertical and spaced apart at the proper distance, their flanges extending outwardly therefrom and secured together by the plates 18 and 19 attached to the top and bottom of the tie. The plates 18 correspond in position, location and lengths to the plates 8 of the other figures. 20 indicates the locking plates on the modified form of tie which may be of any well known construction, held rigidly in place by means of bolts 21'. It will be understood that in this modified style of tie the channels 17 and the plates 18 and 19 will be bent to have the same general outline shown in Figs. 1 to 4 inclusive.

When in use, as illustrated in Fig. 1, I prefer to cover with ballast the central depressed and downwardly bent end portions of the tie, as by this means the track is more firmly held against displacement. The form and proportions of my tie are such that it provides ample bearing surfaces on the ballast and may also be embedded in the same to securely anchor the track, while the bearing portions are readily accessible for tamping and surfacing the road bed as may be desired.

Although I have shown and described my improvements in considerable detail, I do not wish to be limited to the exact and specific details shown and described, but may use such substitutions, modifications or equivalents thereof, as are embraced within the scope of my invention, or as pointed out in the claims.

Having thus described my invention, what I claim and desire to secure by Letters Patent is:—

1. A metallic railway cross-tie comprising a continuous body portion of uniform section upwardly extending at the rail seats and provided with wider portions secured to the lower portions thereof below said rail seats.

2. A metallic railway cross-tie comprising a continuous body portion of uniform section upwardly projecting at the rail seats, the adjoining end and intermediate portions sloping downwardly from said seats, the central portion being substantially horizontal, wider and shorter portions secured to the lower part of the body portion below the rail seats and adapted to provide substantial bearings on the ballast.

3. A metallic railway cross-tie comprising a comparatively narrow section, with laterally extending bottom flanges, upwardly projecting at the rail seats, the portions adjacent said rail seats sloping downwardly therefrom to the ends and intermediate portions of the tie, and base plates shorter and wider than said narrow section secured to said flanges below the rail seats.

4. A metallic railway cross-tie comprising a continuous body portion of inverted trough-section and with outstanding lower flanges, said body portion upwardly projecting at the rail seats, and bearing plates wider and shorter than said body portion secured to the side flanges below the rail seats.

5. A metallic railway cross-tie comprising an integral body portion of inverted channel form with flanges extending laterally from the lower portions thereof, said tie being formed to project upwardly at the rail seat portions, the adjoining end and intermediate portions sloping downwardly from said rail seats, the central portion being substantially horizontal, and bearing plates shorter and wider than said body portion secured to said flanges below the rail seats.

6. A metallic railway tie, comprising a body portion of inverted uniform channel section with flanges projecting laterally from the lower portions thereof, said body portion projecting upwardly at the rail seats and sloping downwardly therefrom toward the center and ends of the tie, and base plates shorter and wider than, and conforming to the lower outline of said body portion secured to said flanges below the rail seats.

7. A metallic railway tie comprising a metal shape of substantially uniform inverted channel cross section, having, longitudinally thereof, a depressed central portion, upwardly projecting portions below the rail seats and downwardly sloping ends; integral flanges extending outwardly along the lower edges of the webs of said shape, bent base plates, shorter than said tie and conforming to the outline of the bottom thereof below the rail seats, said base plates being attached to the outwardly extending flanges beneath and adjacent to the rail seats and extending beyond the sides of the body portion of the tie.

In testimony whereof I hereto affix my signature in the presence of two witnesses.

EDWIN E. SLICK.

Witnesses:
A. DIX TITTLE,
PLUMA F. LONGSHORE.

Copies of this patent may be obtained for five cents each, by addressing the "Commissioner of Patents. Washington, D. C."