Innovation, Sciences et Développement économique Canada
Office de la Propriété Intellectuelle du Canada

Innovation, Science and Economic Development Canada
Canadian Intellectual Property Office

CA 2924916 C 2021/07/06

(11)(21) 2 924 916

(12) BREVET CANADIEN
CANADIAN PATENT

(13) C

(86) Date de dépôt PCT/PCT Filing Date: 2014/09/19
(87) Date publication PCT/PCT Publication Date: 2015/03/26
(45) Date de délivrance/Issue Date: 2021/07/06
(85) Entrée phase nationale/National Entry: 2016/03/21
(86) N° demande PCT/PCT Application No.: AT 2014/050213
(87) N° publication PCT/PCT Publication No.: 2015/039160
(30) Priorité/Priority: 2013/09/23 (AT A 50610/2013)

(51) Cl.Int./Int.Cl. *E05D 15/10* (2006.01)

(72) Inventeurs/Inventors:
MAIR, ANDREAS, AT;
ZARL, HEINZ, AT

(73) Propriétaire/Owner:
KNORR-BREMSE GESELLSCHAFT MIT BESCHRANKTER HAFTUNG, AT

(74) Agent: SMART & BIGGAR IP AGENCY CO.

(54) Titre : MODULE DE PORTIERE COULISSANT ET PIVOTANT DESTINE A UN VEHICULE FERROVIAIRE AYANT SURVERROUILLAGE DE POINT MORT AMELIORE

(54) Title: SWINGING-SLIDING DOOR MODULE FOR A RAIL VEHICLE WITH IMPROVED OVER-CENTRE LOCKING

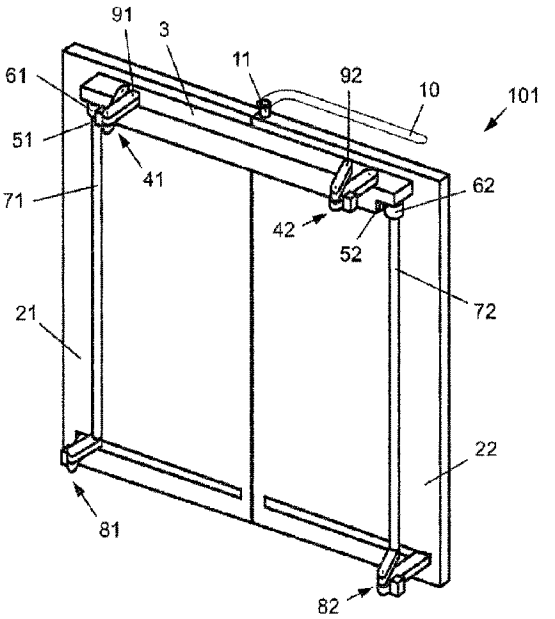

(57) Abrégé/Abstract:
A swinging-sliding door module for a rail vehicle is provided, said swinging-sliding door module comprising a door leaf and a rotatably mounted rotary pillar coupled to the door leaf. Furthermore, the swinging-sliding door module comprises a support which is oriented longitudinally in the sliding direction of the door leaf and is mounted so as to be displaceable transversely with respect to the longitudinal extent thereof in the horizontal direction in relation to the rotary pillar and in which the door leaf is mounted displaceably. A first over-centre locking brings about the deployment movement of the support. Furthermore, the coupling between rotary pillar and door leaf comprises a second over-centre locking which acts in the deployment direction of the door leaf.

Abstract

A swinging-sliding door module for a rail vehicle is provided, said swinging-sliding door module comprising a door leaf and a rotatably mounted rotary pillar coupled to the door leaf. Furthermore, the swinging-sliding door module comprises a support which is oriented longitudinally in the sliding direction of the door leaf and is mounted so as to be displaceable transversely with respect to the longitudinal extent thereof in the horizontal direction in relation to the rotary pillar and in which the door leaf is mounted displaceably. A first over-centre locking brings about the deployment movement of the support. Furthermore, the coupling between rotary pillar and door leaf comprises a second over-centre locking which acts in the deployment direction of the door leaf.

Swinging-sliding door module for a rail vehicle with improved over-centre locking

The invention relates to a swinging-sliding door module for a rail vehicle, comprising a door leaf, a rotary pillar which is coupled to the door leaf and is mounted rotatably, and a support which is oriented longitudinally in the sliding direction of the door leaf. The support mentioned is mounted displaceably in the horizontal direction transversely with respect to the longitudinal extent thereof in relation to the rotary pillar. In addition, the door leaf is mounted displaceably in the support. Finally, the swinging-sliding door module also comprises a first over-center locking acting on the support in the deployment direction of the door leaf.

Such an arrangement is basically known. For example, EP 1 314 626 B1 discloses in this regard a swinging-sliding door for vehicles with at least one door leaf which is displaceable in the longitudinal direction thereof, is suspended in a supporting guide and is guided displaceably. The supporting guide can be moved together with the door leaf from a closed position into a displacement position in which the door leaf is located on the outside in front of the vehicle wall. The arrangement here is such that the supporting guide passes in the closed position into a dead center position, and therefore the door can no longer be opened from the inside even by pushing. The door leaf is guided and supported in the region of the lower edge via roller guides which are each connected to a first pivot lever arranged on a rotary pillar, which is arranged vertically in

the door frame. The upper end of the rotary pillar supports a second pivot lever which is connected to the supporting guide via a connecting rod, and therefore displacement of the supporting guide brings about a rotational movement of the rotary pillar.

It is disadvantageous that the door leaf is only inadequately fixed in the lower region and therefore can be pushed outward there even in the closed position. Despite the over-center locking of the support, smaller objects could drop out of the vehicle. At least, pressure fluctuations upon tunnel entries and train passings may lead to tightness problems or to excessive generation of noise if the door leaf is raised from the seal and therefore - at least for a short time - a direct connection is provided between train interior and exterior. This at any rate impairs the subjective sensation of safety of the passengers and also causes a detraction in traveling comfort.

It is therefore an object of the invention to specify an improved swinging-sliding door module. In particular, the door leaf, in the closed position thereof, is intended to remain in contact with the seal even in the event of very different actions on said door leaf.

The object of the invention is achieved with a swinging-sliding door module of the type mentioned at the beginning, in which the coupling between rotary pillar and door leaf

comprises a second over-center locking which acts in the deployment direction of the door leaf.

In this manner, the door leaf is not only kept in position with the aid of an over-center locking in the region of the support but also in the region of the coupling between rotary pillar and door leaf. As a result, the door leaf remains in the closed position thereof in contact with the seal even in the event of very different actions on the door leaf. The subjective sensation of safety of the passengers and the traveling comfort thereof are thus improved. It is also no longer possible for small objects to drop out of the train. Alternatively or additionally to the locking in the closed position, the first and second over-center lockings can also be effective in the open position.

In one embodiment, there is provided a swinging-sliding door module for a rail vehicle, comprising: a door leaf, a rotary pillar which is coupled to the door leaf movable relative to the rotary pillar and is mounted rotatably in relation to the rail vehicle, a support which is oriented longitudinally in the sliding direction of the door leaf, is mounted displaceably in the horizontal direction transversely with respect to the longitudinal extent thereof in relation to the rotary pillar and in which the door leaf is displaceably mounted, wherein the support and the rotary pillar are mechanically coupled in respect of their movements via a rack drive or a lever system, and wherein the support is displaceable in the direction by motor, or the rotary pillar is rotatable in relation to the rail vehicle by motor, a

Date Reçue/Date Received 2020-12-24

first over-center locking acting on the support in the deployment direction of the door leaf, wherein the first over-centre locking comprises a deployment lever rotatably mounted in the support, a connecting lever mounted rotatably in relation to the rail vehicle and hinged to the deployment lever, and a stop, and wherein the coupling between rotary pillar and door leaf comprises a second over-center locking which acts in the deployment direction of the door leaf and which comprises a deployment lever connected to the rotary pillar, a connecting lever hinged to the deployment lever and connected to the door leaf, and a stop.

It is advantageous if the swinging-sliding door module comprises a door drive system acting on the first over-center locking and, via the rotary pillar, on the second over-center locking. As the result, the door leaf can be moved in the deployment direction. In addition, it is advantageous if the door drive system comprises a linear drive which is coupled to the door leaf and acts in the sliding direction thereof. As the result, the door leaf can also be moved in the sliding direction thereof. The swinging-sliding door module therefore

Date Reçue/Date Received 2020-12-24

comprises a door drive system which brings about a deployment movement and a displacement movement of the door leaf, wherein the door drive system comprises a first over-center locking acting on the support in the deployment direction of the door leaf, and a rotary drive for the rotary pillar.

It is particularly advantageous if the door drive systm has only a single motor. The swinging-sliding door module can thereby be constructed very compactly and also simply in terms of control technology.

It is advantageous if the support is arranged in the upper region of the door leaf and the second over-center locking is arranged in the lower region of the door leaf. The door leaf can thereby be fixed particularly readily.

It is furthermore advantageous if a further second over-center locking is arranged between the coupling of the rotary pillar to the support and the second over-center locking in the lower region of the door leaf, in particular in the central region of the door leaf. The door leaf can thereby be fixed even more readily since said door leaf is kept in the position thereof at yet further points with the aid of an over-center locking.

In addition, it is advantageous if the rotary pillar is mechanically coupled to the support. In this manner, a driving force can be transmitted from the support to the rotary pillar or vice versa. It therefore suffices if the

support or the rotary pillar is driven by motor. By means of the coupling, the movement is transmitted from the part driven by motor to the part not driven by motor.

It is particularly advantageous if the coupling between rotary pillar and support is formed by a gearwheel which is arranged on the rotary pillar and is in engagement with a linear toothing arranged on the support. In this variant, the translatory movement of the support is converted into a rotatory movement of the rotary pillar or vice versa. Preferably, a cylindrical gear which is in engagement with a rack arranged on the support or included by the latter is arranged on the rotary pillar. However, it would also be conceivable for a crown gear which is in engagement with a rack arranged on the support or included by the latter to be arranged on the rotary pillar. In this arrangement, the rack is rotated by 90° in relation to the cylindrical gear arrangement. Finally, it would also be conceivable for a bevel gear which is in engagement with a rack arranged on the support or included by the latter to be arranged on the rotary pillar.

It is also advantageous if the coupling between rotary pillar and support comprises a rotary lever which is arranged on the rotary pillar and is guided in a slotted guide arranged on the support, or is connected via at least one further lever to the support, or is connected via at least one further lever to the first over-center locking. In this manner, it is possible, for example, even for nonuniform movements to be

realized between support and rotary pillar, or the force transmission between said support and rotary pillar can also be nonuniform.

It is furthermore particularly advantageous if the rotary pillar has a torsion damper between the coupling of the rotary pillar to the support and the second over-center locking. The support and the second over-center locking can thereby be decoupled in respect of the dynamic behavior or vibration behavior thereof. Dynamic influences occurring on a rail vehicle, in particular vibrations, may lead to an over-center locking overcoming the dead center and a door suddenly springing open. In particular at high speeds, this may lead to hazardous situations, in the worst case to injury or even to death of passengers. However, the effect which can be achieved by the torsion damper mentioned is that one of the two over-center lockings remains closed even if the other jumps open - triggered by dynamic phenomena. The door therefore then still remains closed even if one of the over-center lockings overcomes the dead center. The safety of the passengers is therefore significantly increased. Although an advantageous, that is to say different, vibration behavior of the first and second over-center lockings is in any case already produced by means of the asymmetric distribution of mass between support and rotary pillar, this can be improved even more and also influenced in a targeted manner by the use of a torsion damper.

It is also particularly advantageous if the rotary pillar has a torsion damper between two second over-center lockings. As the result, over-center lockings arranged on the rotary pillar can be decoupled in respect of the dynamic behavior or vibration behavior thereof. What has been stated previously applies here by analogy, wherein the safety is increased once again since the different over-center lockings jump open - if at all - in the event of different dynamic excitations and therefore the majority of the over-center lockings always remain closed.

It is also particularly advantageous if a movement coupling between the first over-center lockings and the second over-center lockings is designed in such a manner that the deployment movement of the first over-center locking takes place at a different speed than the deployment movement of the second over-center locking and/or the deployment movements mentioned being or end in a staggered manner. The effect can thereby be achieved that the door leaf is rotated about a horizontal axis running in the plane of the door leaf during the deployment movement. As the result, a type of shearing movement takes place between door leaf and door seal, and therefore door leaf and seal are in contact only in a small region and only comparatively frictional forces occur. In particular in the event of icing in the sealing region, the driving forces for opening the door, upon which the ice is jettisoned, can thus be kept small.

The rotational movement mentioned can be realized by the fact that the door leaf is moved at a different speed at the top than at the bottom. If the door leaf is moved more rapidly at the top, the door leaf tips outward at the top during opening. If said door leaf is moved more slowly at the top, said door leaf tips inward at the top. A similar effect can be obtained if the movement is initiated in a staggered manner. If the door leaf is first of all deployed outward at the top and, in a staggered manner, at the bottom, the door leaf tilts outward at the top during opening. If the movement is first of all initiated at the bottom, said door leaf then tilts inward at the top. Of course, both operations can be combined, that is to say the movement can be initiated in a staggered manner at the top and bottom and can take place at a different speed. Alternatively or additionally to vertical tilting, horizontal tilting can also take place; that is, the door leaf can first of all be deployed on the left or right. If the horizontal tilting is combined with the vertical tilting, the advantages mentioned are particularly apparent since the frictional forces between seal and door are particularly small because of the tilting "across the corner".

For better understanding of the invention, the latter is explained in more detail with reference to the figures below, in which

Fig. 1 shows a first schematically illustrated example of a swinging-sliding door module, in which a

laterally deployable support is coupled to the rotary pillar via a rack drive;

Fig. 2 shows a detailed view of an over-center locking;

Fig. 3 shows a second schematically illustrated example of a swinging-sliding door module, in which a laterally deployable support is coupled to the rotary pillar via a lever system;

Fig. 4 is as per Fig. 1, only with a torsion damper in the rotary pillar;

Fig. 5 is as per Fig. 4, only with a further second over-center locking and further torsion dampers in the rotary pillars;

Fig. 6 shows an example of a linear guide system for the door leaves, and

Fig. 7 shows a schematically illustrated example in which the door leaf tilts outwards at the top during the deployment movement.

It should be stated at the outset that identical parts are provided with the same reference numbers or same component designations in the variously described embodiments, wherein the disclosures contained throughout the description can be transferred analogously to identical parts with the same

reference numbers or identical component designations. The position details selected in the description, such as, for example, at the top, at the bottom, laterally, etc. also relate to the immediately described and illustrated figure and, in the event of a change in position, can be transferred analogously to the new position. Furthermore, individual features or combinations of features from the various exemplary embodiments shown and described may constitute solutions which are independent, inventive or are according to the invention per se.

Fig. 1 shows an exemplary embodiment of a swinging-sliding door module 101. The swinging-sliding door module 101 comprises two door leaves 21, 22 and a support 3 which is oriented longitudinally in the sliding direction of the door leaves 21, 22 and is mounted displaceably in the horizontal direction transversely with respect to the longitudinal extent thereof. A linear guide with the aid of which the door leaves 21, 22 are mounted displaceably is arranged in or on the support 3. During the opening of the door, the support 3 is displaced in the deployment direction, which can take place, for example, with the aid of the two first over-center lockings 41 and 42.

The deployment movement of the support 3 is converted by racks 51, 52, which are arranged laterally on the support 3, into a rotational movement of gearwheels 61 and 62. Said gearwheels 61 and 62 are mounted on rotary pillars 71 and 72, as the result of which the latter are also set into rotation

and activate the second over-center lockings 81 and 82. The over-center lockings 41, 42, 81, 82 each comprise a rotatably mounted deployment lever, a connecting lever connected to the latter in an articulated manner, and a stop (also see Fig. 2).

In order to understand the function, it is also noted that the rotary pillars 71 and 72 are mounted in rotary bearings which are anchored fixedly in the rail vehicle. Furthermore, the bearing points 91 and 92 are also anchored fixedly in the rail vehicle and thus support the connecting levers. If the deployment levers of the first (upper) over-center lockings 41 and 42 are now set into rotation, the connecting levers are supported at the bearing points 91 and 92 and lock the support 3 in the deployment direction.

In principle, the deployment movement and sliding movement of the door leaves 21, 22 can take place with a plurality of separate motors. For example, a first motor sets the support 3 and therefore also the rotary pillars 71 and 72 into movement (or else vice versa), whereas a second motor is provided for the sliding movement of the door leaves 21, 22. The first motor, for example, can set the levers of the first over-center lockings 41 and 42 into rotation. The second motor is activated in a staggered manner and therefore brings about the sliding movement which can be realized, for example, in a manner known per se with a rack drive, a spindle drive or else via a cable pull.

However, it is particularly advantageous if the door drive system has a single motor which brings about both the deployment movement and the sliding movement of the door leaves 21, 22. For example, the motor can be connected to a gearing which has two output shafts. One of the shafts can then be connected to the deployment levers (see Fig. 2) of the first over-center lockings 41 and 42, and the other shaft can be connected to the linear drive system. The use of a planetary gearing or else of a motor, in which both the rotor and the stator form a main drive pinion, would also be conceivable. The stator is then not fixedly connected to the swinging-sliding door module 101, as is generally customary, but rather is mounted rotatably like the rotor.

It is particularly advantageous if a door leaf 21, 22 is guided in a slotted guide, which is arranged fixedly in relation to the rail vehicle, and therefore the deployment movement and the sliding movement are always carried out in a predetermined relation to each other, i.e. the two movements are mixed. For this purpose, this slotted guide can have a first rectilinear portion which is oriented in the sliding direction of the sliding door, a second portion which is oriented normally to the first portion, and a curved section which connects the two rectilinear portions. Accordingly, in the first portion, only the sliding movement is permitted and, in the second portion, only the deployment movement is permitted, whereas the sliding movement and the deployment movement are carried out simultaneously in the curved portion.

Fig. 1 shows an example of a slotted guide 10 (illustrated by thin lines) in which a pin 11 is guided. In Fig. 1, only one of the door leaves 22 is guided in a slotted guide 10 since it is assumed that the door leaf 21 is kinematically coupled to the door leaf 22 guided in the slotted guide 10, for example via a driving spindle of a linear drive for the sliding movement. Of course, however, both door leaves 21, 22 could also be guided in a slotted guide 10.

Fig. 2 shows by way of example the second over-center locking 81 which, in this example, comprises the deployment lever 12, the connecting lever 13 and the stop 14. In the position illustrated, the door leaf 21 is in the closed position. Pulling on same is pointless since the two levers 12 and 13 are in contact with the stop 14 and therefore the door leaf 21 cannot be moved further outward. If the door leaf 21 is pushed inward, the deployment lever 12 and the connecting lever 13 move to the left (see the intermediate position illustrated by thin lines), but only as far as the dead center TP. Furthermore, the door leaf 21 cannot be pushed inward either. For the (intentional) movement of the door leaf 21, the deployment lever 12 is set into rotation.

In the example illustrated in Fig. 1, the over-center lockings 41, 42 and 82 are constructed similarly to the over-center locking 81, wherein the first over-center lockings 41, 42 primarily fix the support 3 and therefore act only indirectly on the door leaves 21, 22. For the deployment

movement of the support 3, the corresponding deployment lever of the first over-center lockings 41, 42 is set into rotation. Of course, the use of an over-center locking is not restricted to the specifically illustrated variant, but rather modifications of the functional principle are, of course, also conceivable.

In general, it should be noted that, because of the kinematic relationships, the first over-center lockings 41, 42 and the second over-center lockings 81, 82 may be constructed differently in particular in respect of the lever length thereof and/or the rotational angles of same. In addition, the rack drive 51, 52 and 61, 62 can be configured according to a required transmission ratio.

Fig. 3 shows a further possibility for coupling the support 3 to the rotary pillar 72. Specifically, Fig. 3 shows a swinging-sliding door module 102 in which the coupling mentioned is not carried out with the aid of a rack drive, but rather a movement of the upper over-center locking 42 is transmitted with the transmission lever 15 and the rotary lever 16 to the rotary pillar 72. If the upper over-center locking 42 is released, the transmission lever 15 is pulled to the left, as the result of which the rotary lever 16 and the rotary pillar 72 begin to rotate in the clockwise direction and, consequently, also release the lower over-center locking 82. It would also be conceivable for the rotary lever 16 to alternatively be connected to the support 3 via a further lever, or to be guided via a slotted guide

arranged fixedly in the rail vehicle, and therefore the linear movement of the support 3 is converted into a rotational movement of the rotary pillars 71, 72.

Fig. 4 shows a further example of a swinging-sliding door module 103 which is very similar to the swinging-sliding door module 101 illustrated in Fig. 1. In contrast thereto, torsion dampers 171, 172, which can be composed, for example, of an elastomer, are integrated in the rotary pillars 71, 72. With the aid of said torsion dampers 171, 172, the first (upper) over-center lockings 41, 42 can be decoupled in respect of the dynamic behavior thereof, in particular in respect of the vibration behavior thereof, from the second (lower) over-center lockings 81, 82.

Dynamic influences occurring at a rail vehicle, in particular vibrations, may lead to an over-center locking overcoming the dead center and to a door suddenly springing open. However, the effect which can now be achieved by the torsion dampers 171, 172 mentioned is that not all of the over-center lockings 41, 42, 81, 82 are excited in the same manner and therefore also do not all jump open at the same time. Owing to the fact that one of the over-center lockings 41, 42, 81, 82 always remains locked, even if individual over-center lockings of the over-center lockings 41, 42, 81, 82 jump open because of dynamic phenomena, the door always remains closed. Though an advantageous, that is to say different, vibration behavior of the first and second over-center locking 41, 42, 81, 82 is in any case already produced by the use of the

torsion dampers 171, 172, this can, however, be further improved and also influenced in a targeted manner, by the asymmetric distribution of mass between support 3 and rotary pillar 71, 72. In addition to classical calculation, computer simulations and tests for coordinating the system can also be used.

It would also be conceivable for the rotary pillars 71 and 72 to be completely manufactured from a plastic which has the corresponding spring and damping properties. In this manner, the upper over-center lockings 41 and 42 can also be "out of tune" in relation to the lower over-center lockings 81 and 82. Separate torsion dampers 171, 172 can then be omitted.

Optionally, additional weights can also be attached to the swinging-sliding door module 103, or parts of same can be innately of correspondingly heavy design in order to obtain the desired dynamic behavior. The use of different materials would in turn be conceivable in this connection. For example, the first over-center lockings 41 and 42 could be manufactured from steel, whereas the second over-center lockings 81 and 82 could be manufactured from a lighter plastic, and therefore the individual lockings 41, 42, 81, 82 have a different vibration behavior with an otherwise identical shaping. Particularly high security against the unintentional jumping open of a sliding door can thereby be ensured.

It would also be conceivable in general not only to change the overall mass of a component, but rather the distribution of mass in the event of an overall mass which is identical per se. For example, the distribution of mass of the door leaf 21, 22 could be influenced in a targeted manner such that, in the event of excitation, a different vibration forms in the lower region than in the upper region. As a result, it can likewise be prevented that the first over-center lockings 41, 42 and the second over-center lockings 81, 82 jump open at the same time.

Fig. 5 now shows a further embodiment of a swinging-sliding door module 104 which is very similar to the swinging-sliding door module 103 shown in Fig. 4. However, in contrast thereto, further second over-center lockings 181, 182 are arranged in the region of the center of the door leaf 21, 22. In addition four torsion dampers 191, 192, 201, 202 are provided. In this manner, the security can be increased once again. The door leaves 21, 22 are, on the one hand, held even better by the over-center lockings 181, 182, which are additionally provided in the central region; on the other hand, the over-center lockings 81, 82 can be dynamically decoupled from the over-center lockings 181, 182 with the aid of the torsion dampers 201, 202. Overall, the over-center lockings 41, 42, the over-center lockings 81, 82 and the over-center lockings 181, 182 advantageously (in pairs) have a different vibration behavior. Of course, separate torsion dampers 191, 192, 201, 202 can also be omitted, in particular

if the rotary pillars 71, 72 or the portions thereof are entirely manufactured from a damping material.

Of course, the cited teaching for configuring the vibration behavior of a swinging-sliding door module 103, 104 is not tied to the coupling of the support 3 to the rotary pillars 71, 72 via a rack drive 51, 52, 61, 62, but is equally applicable to the swinging-sliding door module 102 illustrated in Fig. 3. Additional influencing possibilities are provided here by the transmission lever 15 and the rotary lever 16 which can be appropriately designed, for example, in respect of the weight thereof, the distribution of mass thereof, the elasticity thereof and/or in respect of the damping thereof.

It is noted at this juncture that only half of a swinging-sliding door module 102 is illustrated in Fig. 3. In general, the embodiments illustrated are, of course, suitable both for single-leaf and also for multi-leaf swinging-sliding door modules 101..104.

Fig. 6 now shows in somewhat more detail how the door leaves 21, 22 can be mounted displaceably on the support 3. Specifically, a guide carriage 23 is mounted displaceably on a profile rail 24. A mounting plate 26 is connected to the guide carriage 23 via a bracket 25. In particular, the mounting plate 26, to which the door leaf 22 is fastened, can also be mounted rotatably in the bracket 25. An analogously constructed guide system for the right door leaf 21 is

located on the lower side of the support 3. In general, use can be made of both linear rolling guides and linear sliding guides.

For the drive of the door leaves 21, 22, it is possible, for example, for an endless cable to be placed in the longitudinal direction around the support 3 and to be connected to the guide carriages 23. If the cable is moved, the door leaves 21, 22 also move in opposite directions in synchronism. The use of a rack drive or spindle drive, for example, would also be conceivable.

Fig. 7 finally shows a side view of a swinging-sliding door module 105 similar to the swinging-sliding door module 101 illustrated in Fig. 1. In this example, a movement coupling between the first over-center lockings 42 and the second over-center lockings 82 is designed in such a manner that the deployment movement of the first over-center lockings 42 takes place at a different speed than the deployment movement of the second over-center lockings 82, and/or the deployment movements mentioned begin or end in a staggered manner. Specifically, in this example, the door leaf 22 is rotated about a horizontal axis, which runs in the plane of the door leaf 22, during the deployment movement. The mentioned rotational movement is realized here in such a manner that the door leaf 22 tilts outward at the top. To this end, the door leaf 22 is shown slightly deployed in Fig. 7.

By means of the rotational movement, a type of shearing movement takes place between door leaf 22 and door seal, and therefore door leaf 22 and seal are in contact only in a small region and only comparatively frictional forces occur. In particular in the event of icing in the sealing region, the driving forces for opening the door, upon which the ice is jettisoned, can thus be kept small. The rotational movement mentioned can be realized by the fact that the door leaf 22 is moved at the top at a different speed than at the bottom, and/or the movement is initiated in a staggered manner at the top and bottom.

Alternatively to the movement illustrated, the door leaf 22 can also tilt inward at the top. Alternatively or additionally to the vertical tilting, a horizontal tilting can also take place, i.e. the door leaf 22 can be first of all deployed on the left or right. If the horizontal tilting is combined with the vertical tilting, the advantages mentioned are particularly evident since the frictional forces between seal and door are particularly small because of the tilting "across the corner".

The exemplary embodiments show possible variant embodiments of a swinging-sliding door module 100..105 according to the invention, wherein it should be mentioned at this juncture that the invention is not restricted to the specifically illustrated variant embodiments thereof; rather, diverse combinations of the individual variant embodiments with one another are also possible, and this variation option, on

account of the teaching relating to technical practice provided by the present invention, falls within the area of expertise of a person skilled in this technical field. The scope of protection therefore covers all conceivable variant embodiments which are made possible by combining individual details of the variant embodiment which is being illustrated and described.

In particular, it is emphasized that the devices illustrated may in reality also comprise more constituent parts than illustrated.

As a matter of form, it should be pointed out in conclusion that, to provide a better understanding of the construction of the swinging-sliding door module 100..105, the latter or the constituent parts thereof in some cases could not be illustrated to scale and/or have been illustrated on an enlarged and/or reduced scale.

The object on which the independent inventive solutions are based can be gathered from the description.

List of reference signs

101..105	swinging-sliding door module
21, 22	door leaf
3	support
41, 42	first over-center locking
51, 52	rack
61, 62	gearwheel
71, 72	rotary pillar
81, 82	second over-center locking (at the bottom)
91, 92	bearing point
10	slotted mechanism
11	pin
12	deployment lever
13	connecting lever
14	stop
15	transmission lever
16	rotary lever
171, 172	torsion damper
181, 182	second over-center locking (center)
191, 192	torsion damper
201, 202	torsion damper
23	guide carriage
24	profile rail
25	bracket

26	mounting plate
TP	dead center

Patent Claims

1. A swinging-sliding door module for a rail vehicle, comprising:

- a door leaf,
- a rotary pillar which is coupled to the door leaf movable relative to the rotary pillar and is mounted rotatably in relation to the rail vehicle,
- a support which is oriented longitudinally in the sliding direction of the door leaf, is mounted displaceably in the horizontal direction transversely with respect to the longitudinal extent thereof in relation to the rotary pillar and in which the door leaf is displaceably mounted, wherein the support and the rotary pillar are mechanically coupled in respect of their movements via a rack drive or a lever system, and wherein the support is displaceable in said direction by motor, or the rotary pillar is rotatable in relation to the rail vehicle by motor,
- a first over-center locking acting on the support in the deployment direction of the door leaf,

wherein

- the first over-centre locking comprises a deployment lever rotatably mounted in the support, a connecting lever mounted rotatably in relation to the rail vehicle and hinged to the deployment lever, and a stop, and wherein the coupling between rotary pillar and door leaf comprises a second over-center locking which acts in the deployment direction of the door leaf and which comprises a deployment lever connected to the rotary pillar, a

Date Reçue/Date Received 2020-12-24

connecting lever hinged to the deployment lever and connected to the door leaf, and a stop.

2. The swinging-sliding door module as claimed in claim 1, wherein a door drive system acting on the first over-center locking and, via the rotary pillar, on the second over-center locking.

3. The swinging-sliding door module as claimed in claim 1 or 2, wherein the door drive system comprises a linear drive which is coupled to the door leaf and acts in the sliding direction thereof.

4. The swinging-sliding door module as claimed in claims 2 and 3, wherein the door drive system has a single motor.

5. The swinging-sliding door module as claimed in one of claims 1 to 4, wherein the support is arranged in the upper region of the door leaf and the second over-center locking is arranged in the lower region of the door leaf.

6. The swinging-sliding door module as claimed in claim 5, wherein a further second over-center locking is arranged between the coupling of the rotary pillar to the support and the second over-center locking, in particular in the central region of the door leaf.

Date Reçue/Date Received 2020-12-24

7. The swinging-sliding door module as claimed in one of claims 1 to 6, wherein the coupling between rotary pillar and support is formed by a gearwheel which is arranged on the rotary pillar and which is in engagement with a linear toothing arranged on the support.

8. The swinging-sliding door module as claimed in one of claims 1 to 6, wherein the coupling between rotary pillar and support comprises a rotary lever which is arranged on the rotary pillar and is guided in a slotted guide arranged on the support, or is connected via at least one further lever to the support, or is connected via at least one further lever to the first over-center locking.

9. The swinging-sliding door module as claimed in one of claims 1 to 8, wherein the rotary pillar has a torsion damper between the coupling of the rotary pillar to the support and the second over-center locking.

10. The swinging-sliding door module as claimed in one of claims 1 to 9, wherein the rotary pillar has a torsion damper between two second over-center locking.

11. The swinging-sliding door module as claimed in one of claims 1 to 10, wherein a movement coupling between the first over-center lockings and the second over-center lockings is designed in such a manner that the deployment movement of the first over-center lockings takes place at a different speed than the deployment movement of the

Date Reçue/Date Received 2020-12-24

second over-center lockings and/or the deployment movements mentioned begin or end in a staggered manner.

Date Reçue/Date Received 2020-12-24

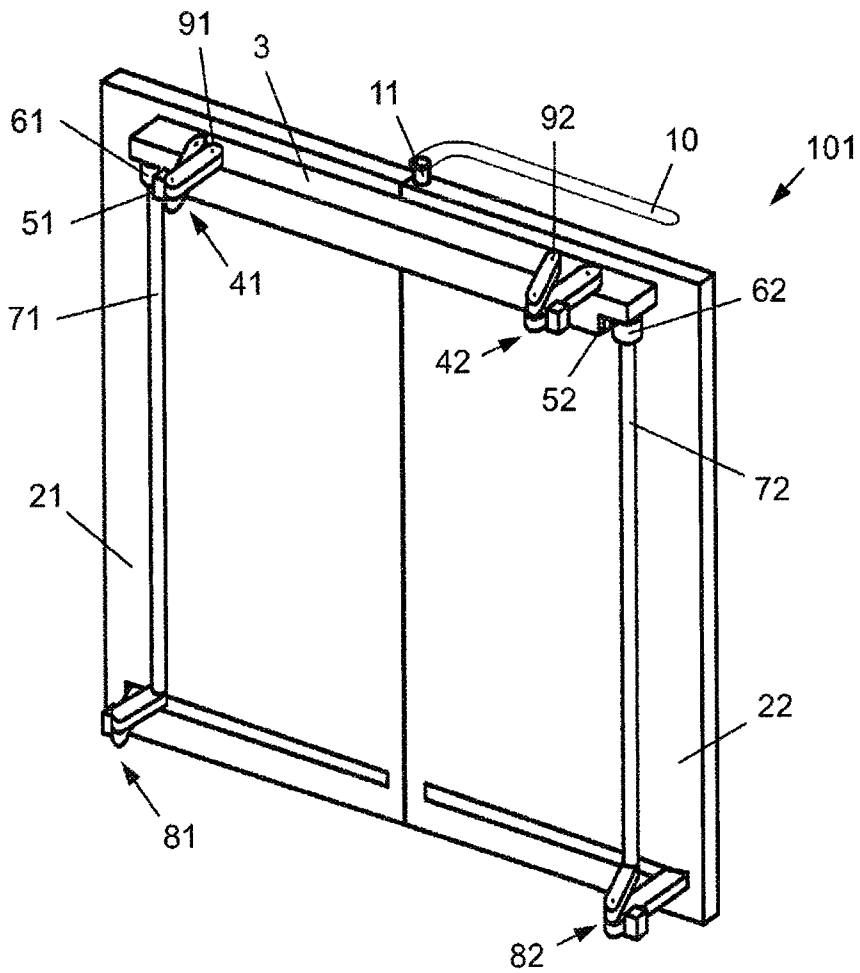

Fig. 1

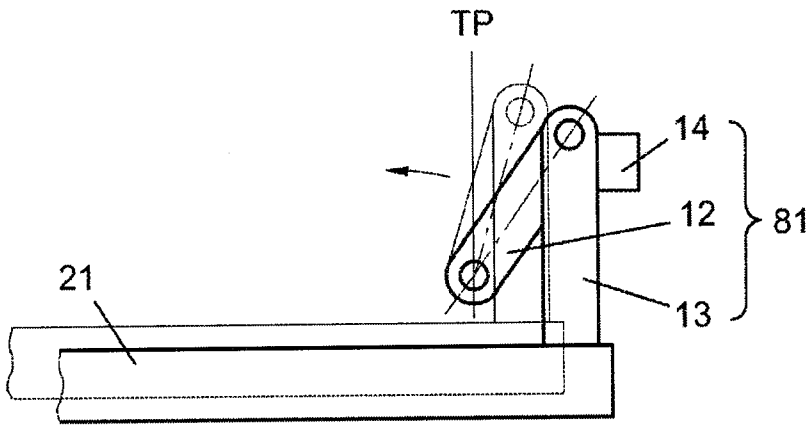

Fig. 2

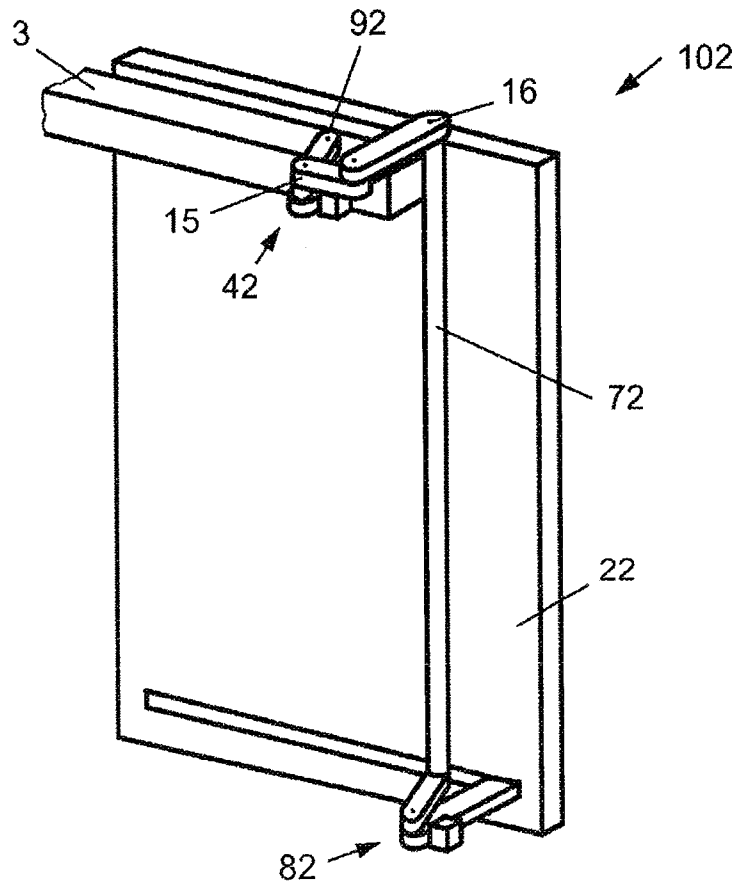

Fig. 3

Patent Agents
Fetherstonhaugh & Co.

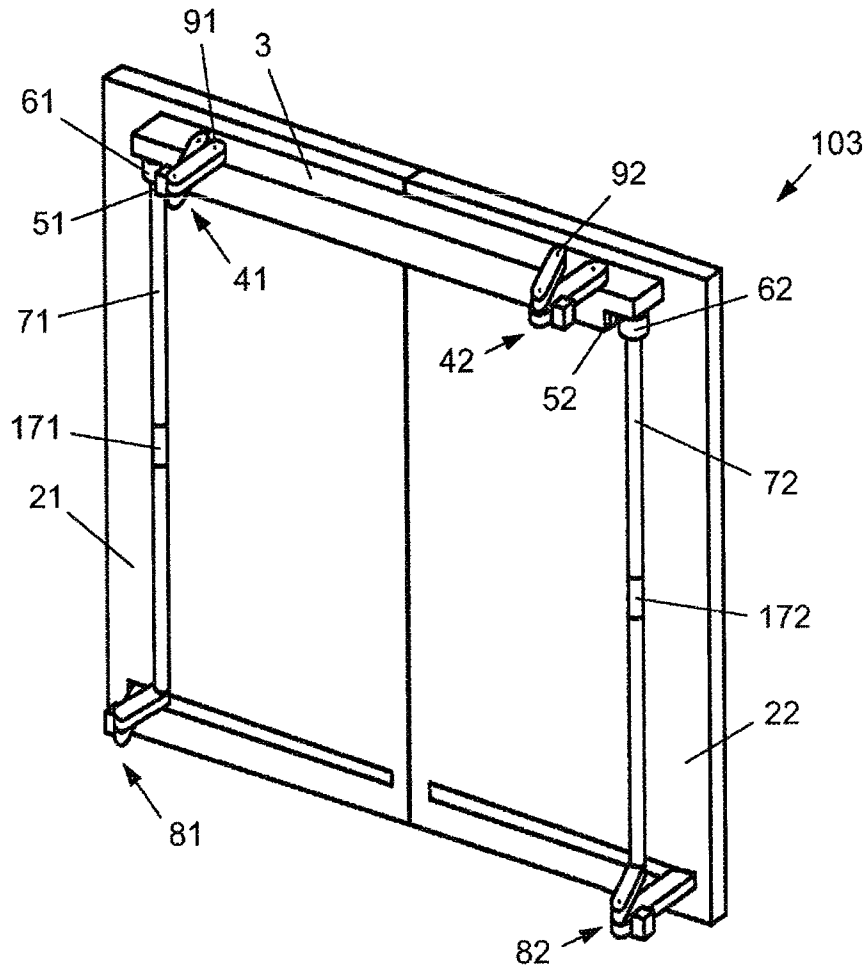

Fig. 4

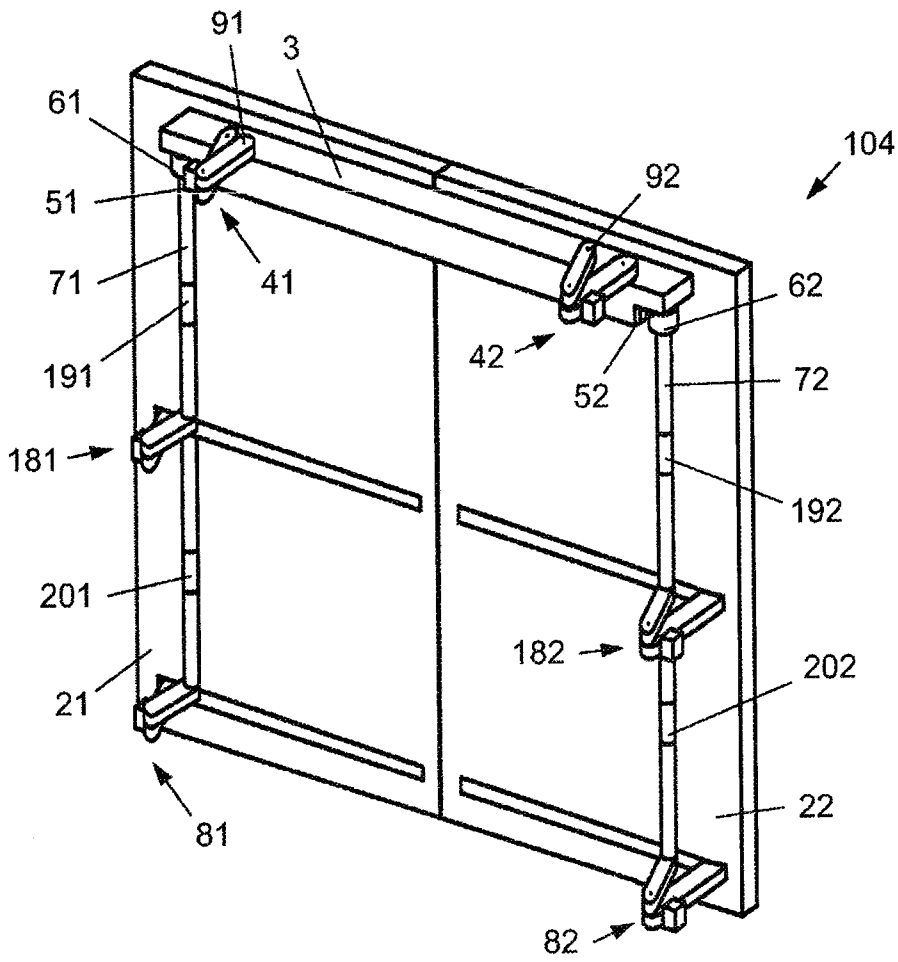
91
3
61
104
92
51
41
71
62
42
52
191
72
181
192
201
182
202
21
22
81
82

Fig. 5

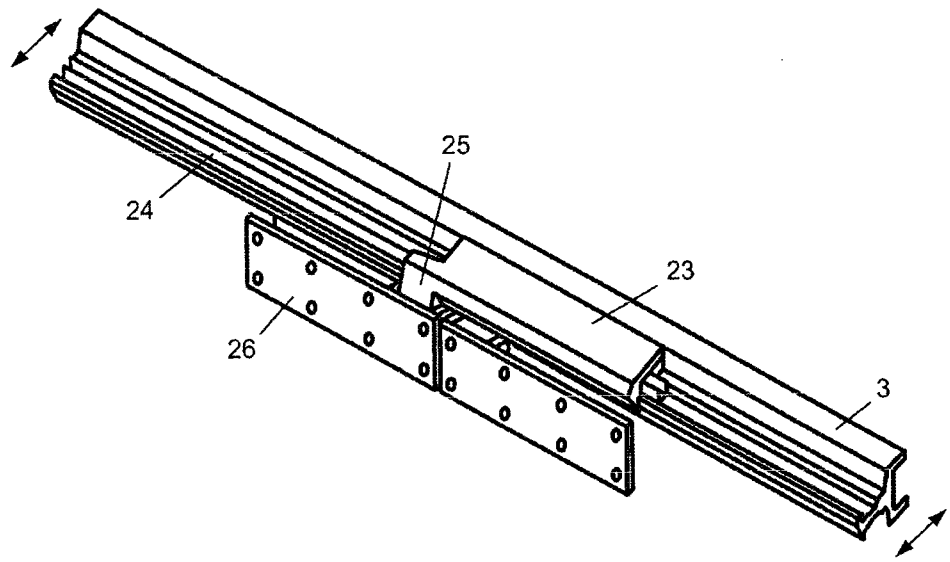

Fig. 6

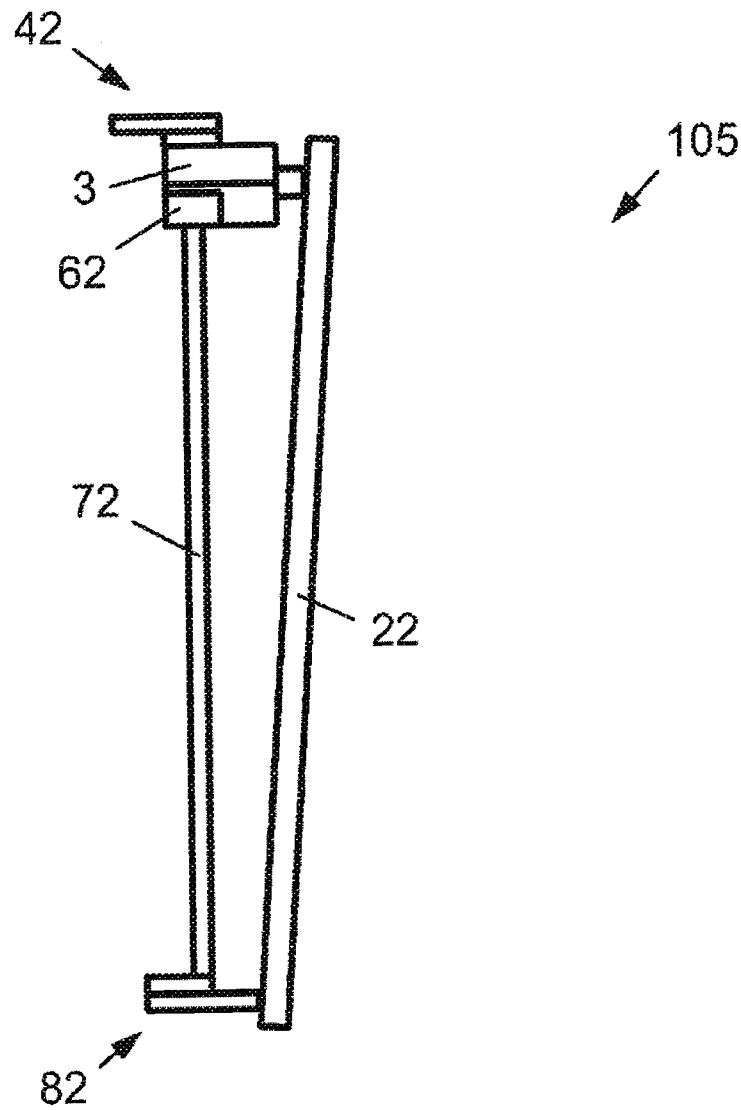

Fig. 7

Patent Agents
Fetherstonhaugh & Co.

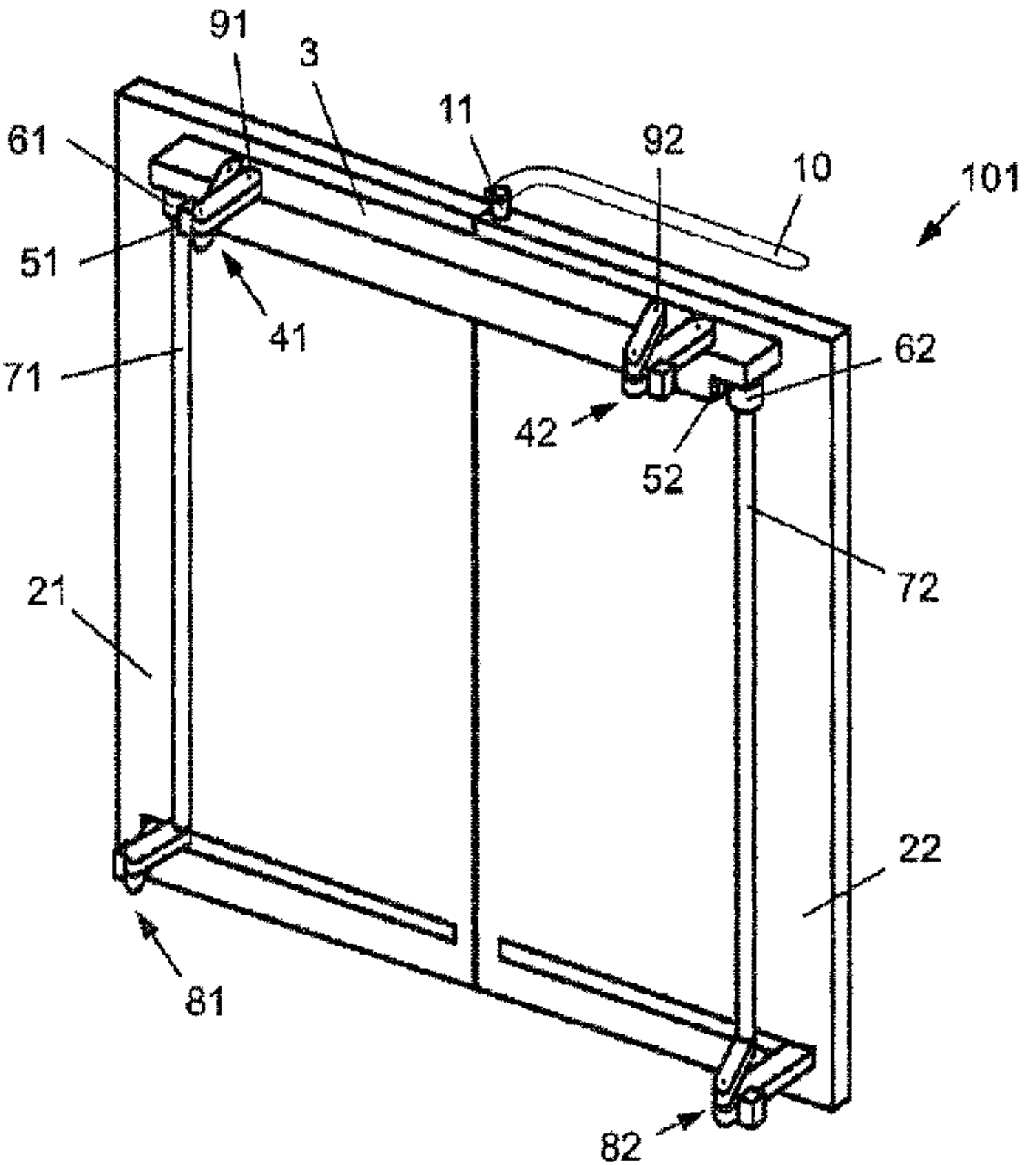
91
3
11
92
10
101
61
51
41
71
62
42
52
72
21
22
81
82