(12) INTERNATIONAL APPLICATION PUBLISHED UNDER THE PATENT COOPERATION TREATY (PCT)

(19) World Intellectual Property Organization
International Bureau

(43) International Publication Date
05 July 2018 (05.07.2018)

WIPO | PCT

(10) International Publication Number
WO 2018/125348 A1

(51) International Patent Classification:
H04N 21/431 (2011.01) *G06F 3/048* (2013.01)
G06F 3/14 (2006.01)

(21) International Application Number:
PCT/US2017/054014

(22) International Filing Date:
28 September 2017 (28.09.2017)

(25) Filing Language: English

(26) Publication Language: English

(30) Priority Data:
15/395,798 30 December 2016 (30.12.2016) US

(71) Applicant: **GOOGLE INC.** [US/US]; 1600 Amphitheatre Parkway, Mountain View, CA 94043 (US).

(72) Inventors: **LEE, Eunjoo**; 1600 Amphitheatre Parkway, Mountain View, CA 94043 (US). **KRUGE, Nicholas Michael**; 1600 Amphitheatre Parkway, Mountain View, CA 94043 (US). **KIM, Yong Hoon**; 1600 Amphitheatre Parkway, Mountain View, CA 94043 (US).

(74) Agent: **POH, Philip R.** et al.; Byrne Poh LLP, 11 Broadway, Suite 1115, New York, NY 10004 (US).

(81) Designated States *(unless otherwise indicated, for every kind of national protection available)*: AE, AG, AL, AM, AO, AT, AU, AZ, BA, BB, BG, BH, BN, BR, BW, BY, BZ, CA, CH, CL, CN, CO, CR, CU, CZ, DE, DJ, DK, DM, DO, DZ, EC, EE, EG, ES, FI, GB, GD, GE, GH, GM, GT, HN, HR, HU, ID, IL, IN, IR, IS, JO, JP, KE, KG, KH, KN, KP, KR, KW, KZ, LA, LC, LK, LR, LS, LU, LY, MA, MD, ME, MG, MK, MN, MW, MX, MY, MZ, NA, NG, NI, NO, NZ, OM, PA, PE, PG, PH, PL, PT, QA, RO, RS, RU, RW, SA, SC, SD, SE, SG, SK, SL, SM, ST, SV, SY, TH, TJ, TM, TN, TR, TT, TZ, UA, UG, US, UZ, VC, VN, ZA, ZM, ZW.

(84) Designated States *(unless otherwise indicated, for every kind of regional protection available)*: ARIPO (BW, GH, GM, KE, LR, LS, MW, MZ, NA, RW, SD, SL, ST, SZ, TZ, UG, ZM, ZW), Eurasian (AM, AZ, BY, KG, KZ, RU, TJ, TM), European (AL, AT, BE, BG, CH, CY, CZ, DE, DK, EE, ES, FI, FR, GB, GR, HR, HU, IE, IS, IT, LT, LU, LV, MC, MK, MT, NL, NO, PL, PT, RO, RS, SE, SI, SK, SM, TR), OAPI (BF, BJ, CF, CG, CI, CM, GA, GN, GQ, GW, KM, ML, MR, NE, SN, TD, TG).

Published:
— *with international search report (Art. 21(3))*

(54) Title: SELECTIVE DYNAMIC COLOR MANAGEMENT FOR USER INTERFACE COMPONENTS OF A MEDIA PLAYER

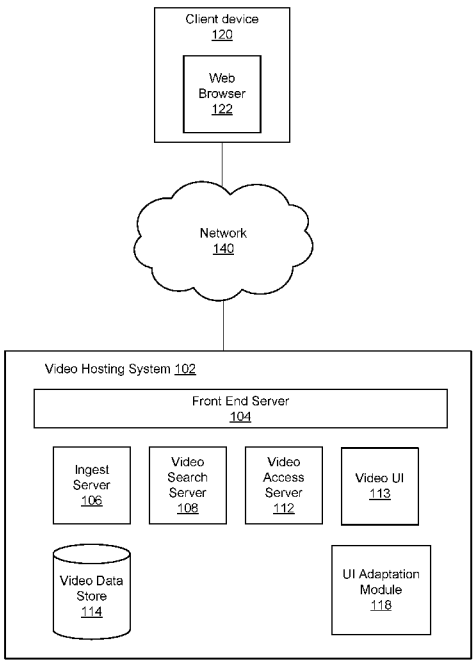

FIG. 1

(57) Abstract: A user interface adaptation module identifies a dominant color of a portion selection of a frame of a video and, based on the dominant color, generates colors for components of a user interface in which the video is displayed. The colors of the user interface components are set based upon the generated colors and upon context information such as a playing state of the video. The setting of the component colors in this way allows the user interface to adjust to complement both the played content of the video and the video's context. In one embodiment, the dominant color is identified by partitioning individual pixels of the portion selection based on their respective colors. In one embodiment, a set of primary color variants is generated based on the dominant color, and different colors are generated for each type of user interface component based on the different primary color variants.

WO 2018/125348 A1

SELECTIVE DYNAMIC COLOR MANAGEMENT FOR USER INTERFACE COMPONENTS OF A MEDIA PLAYER

TECHNICAL FIELD

[0001] The disclosed embodiments relate generally to computer-implemented methods for software application user interfaces, and more specifically, to determining the colors of user interface components within a media player user interface based on content of a media item (e.g., a video) displayed in the media player.

BACKGROUND

[0002] User interfaces of software applications are typically relatively static, possibly changing their layouts in response to window resizes, but without significant changes in response to the content that is currently being displayed. This is particularly problematic for media player applications, where the visual presentation of the media item—including any user interface components displayed in association with the media item itself—may significantly influence the user's viewing experience. For example, distractingly bright user interface components could detract from the viewing of the media item itself, as could user interface components with colors that "clash" aesthetically with the content of the media item. Adjusting or optimizing user interface components to avoid a negative viewing experience presents a technical challenge, because a media player may be used by thousands, millions, or more users to view thousands, millions, or more media items.

SUMMARY

[0003] In one embodiment, a computer-implemented method for setting colors of one or more user interface components in a user interface area of a video player to be visually harmonious with a playing video comprises identifying a plurality of frames of the video. For each frame of the identified frames, a number of operations are performed. The operations include determining a portion selection of the frame based on a position of the user interface area, identifying a dominant color of the portion selection by partitioning colors of pixels of the frame into a plurality of color partitions, identifying a color partition having a greatest number of

the pixels of the portion selection, and averaging the pixels of the identified color partition. The operations further include generating a plurality of color variants based on the dominant color by applying color parameters to color components of the dominant color, and generating, for each of the color variants and for each of a plurality of user interface component types, a user interface component color. The method identifies a playing state of the video, a current one of the identified frames before a current playing point in the video, and a next one of the identified frames after a the current playing point in the video. The method also identifies first user interface component colors based on the playing state and on the user interface component colors generated for the current identified frame, and second user interface component colors based on the playing state and on the user interface component colors generated for the next identified frame. The method sets one or more colors of the one or more user interface components of the video player based on the identified first user interface component colors and on the identified second user interface component colors.

[0004] In one embodiment, a computer-implemented method comprises determining a portion selection of a frame of a video, identifying a dominant color of the portion selection; generating a plurality of color variants based on the dominant color; identifying a playing state of the video; selecting one of the color variants based on the playing state; and setting one or more colors of one or more user interface components of a video user interface based on the selected color variant.

[0005] In one embodiment, a non-transitory computer-readable storage medium stores instructions executable by a processor. The instructions comprise instructions for determining a portion selection of a frame of a video; instructions for identifying a dominant color of the portion selection; instructions for generating a plurality of color variants based on the dominant color; instructions for identifying a playing state of the video; instructions for selecting one of the color variants based on the playing state; and instructions for setting one or more colors of one or more user interface components of a video user interface based on the selected color variant.

[0006] The features and advantages described in this summary and the following detailed description are not all-inclusive. Many additional features and advantages will be apparent to one of ordinary skill in the art in view of the drawings, specification, and claims hereof.

BRIEF DESCRIPTION OF THE DRAWINGS

[0007] FIG. 1 is a high-level block diagram of an environment for video hosting and viewing, according to one embodiment.

[0008] FIG. 2A illustrates one sample user interface appropriate for displaying a video on a mobile device, according to one embodiment.

[0009] FIG. 2B illustrates a sample video display area of a user interface appropriate for displaying a video on a mobile device, according to one embodiment.

[0010] FIG. 3 is a high-level block diagram illustrating a detailed view of the user interface adaptation module of FIG. 1, according to one embodiment.

[0011] FIG. 4 is a data flow diagram illustrating the actions of the color palette determination module, according to an embodiment.

[0012] FIGS. 5A-5C illustrate an example arrangements of user interface elements for displaying a video and a corresponding portion selection, according to various embodiments.

[0013] FIG. 6 illustrates a sample video display area of a user interface appropriate for displaying a video and a corresponding portion selection, according to one embodiment.

[0014] FIG. 7 illustrates generation of color palettes and user interface component color interpolation for a set of frames, according to an embodiment.

[0015] The figures depict various embodiments of the present invention for purposes of illustration only. One skilled in the art will readily recognize from the following discussion that alternative embodiments of the structures and methods illustrated herein may be employed without departing from the principles of the invention described herein.

DETAILED DESCRIPTION

[0016] The embodiments described herein address the technical problem of effectively adjusting the visual presentation of user interface components for displaying media items to improve the experience of thousands, millions, or more users viewing thousands, millions, or more media items. Automatic determination and management of user interface component colors addresses user experience problems caused by inappropriate user interface colors. Automatic determination and management of user interface component colors further addresses technical challenges, for example those caused by large numbers of media items being viewed by many users.

SYSTEM ARCHITECTURE

[0017] FIG. 1 is a high-level block diagram of an environment for video hosting and viewing, according to one embodiment. FIG. 1 illustrates a video hosting system 100 and a client device 120 connected by a network 140. The client device 120 represents an entity that can access videos contained within the video hosting system 100. The Figures and accompanying description herein refer to videos displayed in a video player, but the features and advantages described may also apply to other media items (e.g., images, photos, documents, etc.) displayed in a media player. A user of the client device 120 can access a video from the video hosting system 100 by browsing a catalog of videos, conducting searches using keywords, reviewing play lists from other users or the system administrator (e.g., collections of videos forming channels), or viewing videos associated with particular user groups (e.g., communities). Additionally, in some embodiments, the video hosting system 100 is adapted to receive videos for storage in order to enable the sharing of the videos with other users.

[0018] In one embodiment, a user of the client device 120 uses the client device to communicate with the video hosting system 100 over the network 140. In one embodiment, the client device 120 is a personal computer executing a web browser 122 that allows the user to view web pages and videos provided by the video hosting system 100. In one embodiment, the web browser 122 includes a video player. The client device 120 may alternatively be a device such as a smart phone, a tablet, a television, a television "set-top box," or the like. The video player may also be an application executing on the client device 120, such as a mobile application or a desktop application. Although FIG. 1 illustrates only a single client device 120, it should be understood that many client devices (e.g., millions) can communicate with the video hosting system 100 at any time. The single client device 120 is illustrated in order to simplify and clarify the present description.

[0019] The network 140 represents the communication pathways between the client device 120 and the video hosting system 100. In one embodiment, the network 140 is the Internet, but may also be any network, including but not limited to a Local Area Network (LAN), a Metropolitan Area Network (MAN), a Wide Area Network (WAN), a mobile, wired or wireless network, a cloud computing network, a private network, or a virtual private network, and any combination thereof. In addition, all or some of links can be encrypted using conventional encryption technologies such as the secure sockets layer (SSL), Secure Hypertext Transfer

Protocol (HTTP) and/or virtual private networks (VPNs). In another embodiment, the entities can use custom and/or dedicated data communications technologies instead of, or in addition to, the ones described above.

[0020] The video hosting system 100 represents any system that allows users to access video content via searching and/or browsing interfaces. The videos can be obtained from user uploads of videos, from searches or crawls of other websites or databases of videos, or the like, or any combination thereof. For example, in one embodiment a video hosting system 100 can be configured to allow for user uploads of content; in another embodiment a video hosting system 100 can be configured to only obtain videos from other sources by crawling such sources or searching such sources in real time.

[0021] It will be understood that the term "website" represents any computer system adapted to serve content using any internetworking protocols, and is not intended to be limited to content uploaded or downloaded via the Internet or the HTTP protocol. In general, functions described in one embodiment as being performed on the server side can also be performed on the client side in other embodiments if appropriate. In addition, the functionality attributed to a particular component can be performed by different or multiple components operating together.

[0022] The video hosting system 100 comprises a front end server 104, an ingest server 106, a video search server 108, a video access server 112, a video user interface module 113, a video data store 114, and a user interface adaptation module 118. Many conventional features, such as firewalls, load balancers, application servers, failover servers, site management tools and so forth are not shown so as not to obscure the features of the system.

[0023] The front end server 104 handles all communication with the user via the network 140. The front end server 104 receives requests from client devices 120 and communicates with the other servers of the video hosting system 100 in order to process the requests. The front end server 104 is further configured to monitor user interactions with the video hosting system 100. For example, if a user clicks on a web page, views a video, makes a purchase, opens a document, fills a web-based form, the front end server 104 monitors these interactions. The front end server 104 may be further configured to transmit and present the requested video and related video links to the user on a webpage. The requested video is streamed by the front end server 104 to the user. One or more related video links appear on the webpage where the requested video is

playing, such that the related video link can be selected by a user of a client device 120 in order to view the related videos.

[0024] Any content received via the network 140 from a user for posting to the video hosting system 100 is passed on to the ingest server 106 for processing. The processing of the video file includes assigning an identification number to the newly received video file. Other steps of processing the video file may include formatting (e.g., transcoding), compressing, metadata tagging, content analysis, and/or other data processing methods. The user transmits a form along with the video file transmitted to the video hosting system 100. The user may include in the form information that describes the video (e.g., title, description, and tag information). The form information may also include an indication of the media type, which for uploaded videos would always be the "video" type. The ingest server 106 stores the processed video file in a video data store 114 and stores the information included in the form as metadata of the video file. The video data store 114 is the storage system where the video files transmitted to the video hosting system 100 are stored. A video may be accompanied by icons or thumbnail views, associated metadata, such as title, author, tags, description, comments, and rating.

[0025] The video search server 108 processes any search query received by the front end server 104 from a user. The search query transmitted by the user to the front end server 104 includes search criteria, such as keywords that may identify videos the user is interested in viewing. For example, the search query might be the textual string "machu picchu". The video search server 108 may use the search criteria, for example, to query the metadata of and/or entities associated with all video files stored in the video data store 114 or to query the entity data store 118. The search results are the videos including entities that match the search query. For example, the search results for the search query "machu picchu" include video items that are annotated with the entity "machu picchu" that match the search query. The search results from the query are transmitted to the front end server 104, so that the search results can be presented to the user.

[0026] The video access server 112 receives, from the front end server 104, requests from users that wish to view (or play back) a specific video. From the user perspective, a user may submit a request for a video by browsing the different video categories of the video hosting system 100 or by clicking on a link to a video from a search results webpage. The request transmitted by the user can include the identification number of the video the user wishes to view

(which can be included automatically once the user clicks on the link for the video). The video access server 112 uses the identification number to search and locate where the video is stored in the video data store 114. The video access server 112 provides the video requested to the front end server 104.

[0027] The video hosting system 102 includes a video user interface module 113 that presents a video to a user as part of a user interface. The exact user interface provided by the video user interface module 113 may vary in different embodiments, and the same embodiment may make available different types of user interfaces. For example, FIG. 2A illustrates one sample user interface 200 appropriate for displaying a video on a client device, according to one embodiment. The user interface 200 includes a video display area 205A in which the frames of the video are displayed as the video is played and a component display area 207, which includes various video navigation controls 210 for navigating between videos, starting and stopping playback of the current video, and the like; heading and body text 215A and 215B; background regions 220; and the like. It is appreciated that the user interface illustrated in FIG. 2A is merely one example of a user interface, and that many others, such as user interfaces suitable for mobile devices, mobile applications, desktop applications, and web browsers on traditional desktop or laptop computer screens, and other client devices, are equally possible.

[0028] FIG. 2B illustrates a sample video display area of a user interface appropriate for displaying a video on a mobile device, according to one embodiment. The video display area 205B includes a component display area 209 overlaid on the video display area that includes a background region 235 and text 237 that (for example) indicates a time position within the video. In one embodiment, the background region 235 is partially transparent (e.g., 90% opacity) to allow viewing of the video.

[0029] In one embodiment, the video hosting system 102 additionally includes a user interface adaptation module 118 that modifies the appearance of a user interface for a video player in response to content of the currently-playing video and to a playing state of that video. For example, in one embodiment (described more below with respect to FIG. 3), the user interface adjustment module 118 determines a most representative color—herein referred to as the "dominant" color—from each of various frames or portions of frames of the video content and dynamically adjusts the colors of the various portions of the user interface based at least in part on the determined dominant color. In other embodiments, the user interface adjustment

module 118 is alternatively and/or additionally located on the client device 120, e.g., as part of a custom video player application that interacts with the video hosting system 102 to obtain and play videos.

[0030] It should be appreciated that the data processing operations of the video hosting system 102, as described herein, inherently require a programmed computer system for their practical implementation. To simplify and clarify the present description, the content received and shared by the video hosting system 100 is generally referred to as videos, video files, or video items, as appropriate for the video-specific embodiments described herein, but it should be understood that the video hosting system 100 can receive and share content of any media type. This content may be referred to as media content items, media items, or items. Thus, the operations of the video hosting system 102 described herein can be applied to other types of media content items, not only to videos. For example, other suitable type of content items include visual documents from which color can be extracted, such as static images (either native images such as GIF or JPEG files, or those convertible to images, such as PDF files, word processing files, or the like), multi-slide presentations, and so forth.

USER INTERFACE COLOR ASSIGNMENT

[0031] FIG. 3 is a high-level block diagram illustrating a detailed view of the user interface adaptation module 118, according to one embodiment. As shown in FIG. 3, the user interface adaptation module 118 includes several modules. Those of skill in the art will recognize that other embodiments can have different modules than the ones described here, and that the functionalities can be distributed among the modules in a different manner. In addition, the functions ascribed to the user interface adaptation module 118 can be performed by multiple modules.

[0032] As illustrated, the user interface adaptation module 118 includes a color palette determination module 305 and a component appearance module 310.

[0033] The color palette determination module 305 generates a palette of colors that are visually harmonious (e.g., matching, complementary, analogous, etc.) the colors present in a given image, such as a frame of video. More specifically, the color palette determination module 305 determines a dominant color of the given image (e.g., frame of video) and generates a palette (set) of colors based on that dominant color, as described in greater detail below in conjunction

with FIG. 4. The palette of colors includes one or more constituent sub-palettes that indicate the colors to apply to different types of components of a user interface.

[0034] FIG. 4 is a data flow diagram illustrating the actions of the color palette determination module 305, according to an embodiment. Specifically, FIG. 4 illustrates an embodiment in which three variants of the dominant color are generated, and one or more sub-palettes are in turn generated for each of these variants, each sub-palette indicating colors to apply to the various types of components of the user interface.

[0035] The color palette determination module 305 receives a video frame 405 (or other image) from the video access server 112, and determines 406 a portion selection 407 as described below with respect to the color palette determination module 305. The portion selection 407 is a selected portion of the video frame 405 that is analyzed to determine a dominant color. In some embodiments, the portion selection 407 is a portion of the video frame 405 that is adjacent to one or more UI components. FIGS. 5A-5C and FIG. 6 illustrate example portion selection areas according to various embodiments.

[0036] FIG. 5A illustrates a simplified example arrangement 500 of user interface regions for displaying a video and a corresponding portion selection, according to one embodiment. The example user interface of FIG. 5A includes a video display area 505A and a component display area 507A, which includes one or more UI components. The portion selection 407A is a portion of the video frame displayed in the video display area 505A in a position that is adjacent to (e.g., sharing a border or nearby) the component display area 507A. FIG. 5B illustrates an example arrangement 510 of user interface elements for displaying a video and a corresponding portion selection, according to another embodiment. FIG. 5B includes a video display area 505B and a component display area 507B. The portion selection 407B is a portion of the video frame displayed in the video display area 505B adjacent to the component display area 507B. FIG. 5C illustrates an example arrangement 520 of user interface elements for displaying a video and a corresponding portion selection, according to still another embodiment. FIG. 5C includes a video display area 505C and a component display area 507C. The portion selection 407C is a portion of the video frame displayed in the video display area 505C adjacent to the component display area 507C. The arrangements of FIGS. 5A-5C are example embodiments. The user interface elements may be arranged in different configurations in various embodiments. For example, the user interface elements need not be directly adjacent to the component display area (e.g., there

may be a gap between the portion selection and the component display area, the video area and the component display area, and the like).

[0037] FIG. 6 illustrates a sample video display area 605 of a user interface appropriate for displaying a video and a corresponding portion selection, according to one embodiment. FIG. 6 illustrates an example video display area 605 and a component display area 609, which is overlaid on the video display area similar to component display area 209 of FIG. 2B. The portion selection 407D is a portion of the video frame that is adjacent to the component display area 209. In various embodiments, a video frame 405 may have multiple portion selections 407, each corresponding to one or more UI components. A user interface may include a combination of the component display areas illustrated in FIGS. 5A-5C and 6, and may include a combination of corresponding portion selections 407. For example, an example user interface may include multiple distinct UI portions, with each UI portion being nearby a different region of the video display area. Accordingly, the different UI portions may have different colors based on the different regions of the video display area.

[0038] The color palette determination module 305 may determine the portion selection in a variety of ways. In one embodiment, the dimensions of the portion selection are dependent on the dimensions of the video display area, e.g., being fixed or of a specified proportion of the height and width of the video display area. For example, in FIG. 5A, the dimensions of the portion selection 407A may be 30% of the height and 100% of the width of the video display area 505A (e.g., a horizontal "slice"). In FIG. 6, the dimensions of the portion selection 407D may be 25% of the height and 25% of the width of the video display area 605 (e.g., a rectangle in the bottom-right corner of the video display area). In another embodiment, the dimensions of the portion selection are dependent on the dimensions of the component display area. For example, the portion selection may be a fixed or specified proportion of the height and width of the component display area. For example, the dimensions of the portion selection may be 200% of the height and 100% of the width of the component display area. In still another embodiment, the dimensions of the portion selection are determined based on the content of the video frame, with the UI adaptation module 118 identifying a semantic boundary of the pixels of the video frame content that represents a visual dividing line between separate meaningful objects, regions, or concepts, such as by applying object recognition methods or other methods based on local descriptor matching. For example, if there is a natural divide of the video frame, such as the

horizon in a picture of the ocean, the portion selection may be the portion of the video frame below the horizon. As another example, if the video frame includes a border, the portion selection may be the portion of the video frame occupied by the border.

[0039] Once the portion selection is determined, the color palette determination module 305 partitions 410 the pixels of the portion selection 407. Partitioning the pixels involves dividing the color space into a set of partitions 411, assigning the various pixels (e.g., each pixel) of the portion selection to one of the partitions. For example, assuming 24-bit colors (e.g., 8 bits for each of the hue, saturation, and value—or red, green, and blue—components), each of the 2^{24} possible colors is mapped to one of N (e.g., 1000) distinct partitions 411. The number of pixels in each partition is then counted, and the dominant color 416 is chosen from some number of the partitions with the most pixels. In one embodiment, the dominant color 416 is based on the single partition with the most pixels, and is chosen by averaging 415 the colors within that partition (e.g., computing the average of the <R, G, B> or <H, S, V> components of the pixels within the partition). In some embodiments, the color palette determination module 305 determines multiple dominant colors, e.g., one for each of the *N* partitions with the most pixels by averaging the colors within each partition. With the dominant color 416 for the portion selection 407 chosen, the color palette determination module 305 generates 420 color variants 421 of the dominant color that may be useful in certain contexts, as determined by factors such as the type of screen (e.g., screen resolution, mobile device screen vs. desktop monitor, etc.) on which the video is being watch, the environmental conditions in which the video is being watched (e.g., lighting conditions, time of day, location, etc.), the play status of the video (whether the video is playing or paused, seeking, stopped, rewinding, fast forwarding, etc.), or the like. In the embodiment illustrated FIG. 4, three variants are generated: a main color 421A, a dark color 421B, and a light color 421C.

[0040] In one embodiment, the color palette determination module 305 generates 420 the color variants 421 of the dominant color by selecting, for each color variant, a color that is most similar to the dominant color from a set of possible color variants. For example, in the embodiment illustrated in FIG. 4, the main color 421A, dark color 421B, and light color 421C each have some associated set of ranges of the hue (H) component, each range having a corresponding set of pairs of saturation (S) and brightness (B) parameter values. To generate a particular color variant (e.g., the main color 421A), the hue component of the dominant color is

used to select one of the hue ranges corresponding to the color variant, the saturation component value is adjusted to the closest saturation parameter value for the selected range, and the brightness component value is likewise adjusted to the closest brightness parameter value for the selected range. This has the effect of using the hue component value to adjust the saturation and brightness component values when generating a color variant. As one particular example, the main color 421A has a hue range from 31°-80°, which in turn has saturation parameter values 15 and 85 and brightness parameter values 50 and 60. If the dominant color has HSB components <56°, 100, 100>, then the hue component 56° selects the hue range 31°-80° (since 56° is in the range from 31°-80°), the saturation component is adjusted to 85 (since the saturation component value 100 is closer to the saturation parameter 85 than to saturation parameter 15), and the brightness component is adjusted to 60 (since the brightness component value 100 is closer to the brightness parameter 60 than to the brightness parameter 50). Thus, in this example the application of the parameters corresponding to the main color 421A lead to generating the main color <56°, 85, 60> from the dominant color <56°, 100, 100>. The dark color 421B and the light color 421C are calculated in similar ways using their own corresponding parameter values.

[0041] With the color variants 421 generated, the color palette determination module 305 additionally generates 425 a set of UI component colors corresponding to different types of components in the video user interface created by the video UI module 113. For example, in the embodiment illustrated in FIG. 4, there are nine UI components colors generated for each of the color variants 421: one for each of a "navigation bar" UI component, a "section 1" UI component, a "section 2" UI component, an "active navicon" UI component, an "idle navicon" UI component, an "icon & title text" UI component, a "body text" UI component, a "time display" UI component, and a "time background" UI component. Referring again to the example user interface of the embodiments of FIG. 2A and 2B, the "navigation bar" UI component corresponds to the background 220A; the "section 1" UI component corresponds to the background 220B; the "section 2" UI component corresponds to the background 220C; the "active navicon" UI component corresponds to component 210D (assuming that it is the component reflecting the current status of the video, such as "Playing"); the "idle navicon" UI component corresponds to the components 210A-210C (assuming that they do not reflect the current status of the video); the "icon & title text" UI component corresponds to text 215A; the "body text" UI component corresponds to the text 215B; the "time display" UI component

corresponds to text 237; and the "time background" UI component corresponds to the background region 235.

[0042] In one embodiment, the color palette determination module 305 generates 425 the user interface component colors 426 for a given color variant 421 by selecting, for each type of user interface component, a color that is most similar to the color variant from a set of possible user interface component colors for that user interface component type. For example, in the embodiment illustrated in FIG. 4, each user interface component 430 (e.g., the navigation bar component) has some set of ranges of the saturation (S) component, each range having a corresponding set of brightness (B) parameter values. To form a particular user interface component color (e.g., the color for the navigation bar), the saturation component of the color variant is used to select one of the saturation ranges corresponding to the color variant, and the brightness component value is adjusted to the closest brightness parameter value for the selected saturation range. This has the effect of using the saturation component value to adjust the brightness component value when generating a user interface type color. As one particular example, the navigation bar user interface component type has a saturation range from 15-85, which in turn has corresponding brightness parameter values 45, 50, and 55. Referring to the above example of the main color variant with HSB components <56°, 85, 60>, the saturation component 85 selects the saturation range 15-85 (since the saturation component 85 is in the range from 15-85), and the brightness component is adjusted to 55 (since the brightness component value 55 is closer to the brightness parameter 60 than to the other brightness parameters 45 or 50). Thus, in this example the application of the parameters corresponding to the navigation bar user interface component type lead to generating the component color <56°, 85, 55> from the main color variant <56°, 85, 60>. The other user interface component types 430 have their colors calculated in similar ways using their own corresponding parameter values.

[0043] Returning again to FIG. 3, the user interface adaptation module 118 includes a component appearance module 310 that uses the color palette determination module 305 to generate a color palette for particular image (e.g., portion selection) and sets the user interface components of the video user interface module 113 to the colors of the generated palette. For example, referring to the example of FIGS. 2 and 4, the component appearance module 310 sets the color of the background 220A to the color for the navigation bar user interface component, the color of text 215B to the color for body text user interface component, and so forth.

[0044] In the case of a video (as opposed to a static image), the component appearance module 310 repeatedly uses the color palette determination module 305 on different portion selections of the video in order to continuously adjust the colors of user interface components as the video plays.

[0045] For example, in one embodiment illustrated in FIG. 7, the component appearance module 310 uses the color palette determination module 305 at fixed intervals (e.g., every N frames, or the frames for every t seconds), at each frame choosing a color corresponding to that frame and setting the user interface component colors accordingly. This allows the user interface appearance to vary over time along with the content being displayed in the video frames.

[0046] In one embodiment, in order to achieve smoother color transitions, the component appearance module 310 blends dominant colors over time, such as by linear interpolation. That is, by a time *t* the component appearance module 310 has calculated not only the colors for the frames corresponding to *t*, but also the colors for the frames corresponding to the next interval (at time $t + k$). At each of some smaller intervals (e.g., every screen refresh), the component appearance module 310 determines where the corresponding frame lies compared to the "current" frame (the frame corresponding to time *t*) and the frame at the next interval (the frame corresponding to time $t + k$). That is, if one of the colors calculated for a time t_i is c_i, and a corresponding one of the colors for the next time ($t_i + k$) is c_{i+1}, and the time at which an interpolated color is calculated is t_r, then a corresponding interpolated color c_r is given by the equation $c_r = ((t_r - t_i) / k * c_i) + ((t_{i+1} - t_r) / k * c_i)$. (The product of a scalar and a color is the array of components of the color scaled by the scalar.) For example, as illustrated in FIG. 7, if a particular screen refresh occurred at time $t_r = 0.7k$, the corresponding interpolated color c_r would be $c_r = (0.7 / k * c_i) + (0.3 / k * c_{i+1})$.

[0047] In one embodiment, when blending colors at the current frame (e.g., at every screen refresh), the component appearance module 310 obtains the top *N* dominant colors from the color palette determination module 305, for some integer *N* (e.g., N = 5) and selects, as the dominant color of the next interval (for the frame at time $t + k$), the one of those dominant colors that is most similar to the current dominant color (for the frame at time *t*). The component appearance module 310 then blends the current dominant color with this most similar dominant color. The blending with the most similar dominant color helps to prevent abrupt color changes, which may appear disconcerting to a user.

[0048] In one embodiment, when a video is first accessed by a user, the component appearance module 310 makes the first determination of the dominant color (i.e., the determination for t = 0) based on a cached thumbnail for the video, if available. This permits the determination of the first color to be made—and the user interface components to be colored accordingly—essentially immediately, rather than waiting for the period required to begin video streaming (e.g., several hundred milliseconds). In situations where it is not feasible to recalculate the dominant color over multiple intervals, the single dominant color extracted from the cached thumbnail can be used throughout the video, although this will not provide as optimal a matching of user interface component colors to the video content.

[0049] In one embodiment, the component appearance module 310 sets the colors of the user interface components based on the colors generated from portion selections using the color palette determination module 305 and also on a playing state of the video. For example, if the video is playing, it may be aesthetically pleasing to a user to de-emphasize the user interface components so as not to visually compete with the playing video. Conversely, if the video is paused or otherwise not playing, the user interface components can be more emphasized. In some embodiments, other factors—such as the degree of ambient light as determined by light sensor hardware of the client device 120, or the properties of the screen of the client device (e.g., size, degree of screen reflectivity)—may also influence the choice of colors to use.

[0050] For example, in one embodiment, the playing state of the video determines which color variant is used, with the dark color 421B being used when the video is not playing, and the main color 421A being used when it is not. For example, when the video is playing, the background 220A is set to the color generated for the navigation bar user interface component within the sub-palette generated for the dark color 421B; if the user pauses the video, then the background 220A may be set to the color generated for the navigation bar user interface component within the sub-palette generated for the main color 421A.

OTHER CONSIDERATIONS

[0051] Reference in the specification to “one embodiment” or to “an embodiment” means that a particular feature, structure, or characteristic described in connection with the embodiments is included in at least one embodiment. The appearances of the phrase “in one

embodiment" in various places in the specification are not necessarily all referring to the same embodiment.

[0052] It should be noted that the process steps and instructions are embodied in software, firmware or hardware, and when embodied in software, can be downloaded to reside on and be operated from different platforms used by a variety of operating systems.

[0053] The operations herein may also be performed by an apparatus. Furthermore, the computers referred to in the specification may include a single processor or may be architectures employing multiple processor designs for increased computing capability. It will be appreciated that a variety of programming languages may be used to implement the teachings of the present invention as described herein, and any references below to specific languages are provided for disclosure of enablement and best mode of the present invention.

[0054] While the invention has been particularly shown and described with reference to a preferred embodiment and several alternate embodiments, it will be understood by persons skilled in the relevant art that various changes in form and details can be made therein without departing from the spirit and scope of the invention.

[0055] Finally, it should be noted that the language used in the specification has been principally selected for readability and instructional purposes, and may not have been selected to delineate or circumscribe the inventive subject matter. Accordingly, the disclosure of the present invention is intended to be illustrative, but not limiting, of the scope of the invention, which are set forth in the following claims.

What is claimed is:

1. A computer-implemented method for setting colors of one or more user interface components in a user interface area of a video player, the method comprising:

identifying a plurality of frames of a playing video;

for each frame of the identified frames:

determining a portion selection of the frame based on a position of the user interface area;

identifying a dominant color of the portion selection by:

partitioning colors of pixels of the portion selection into a plurality of color partitions,

identifying a color partition having a greatest number of the pixels of the portion selection, and

averaging the pixels of the identified color partition;

generating a plurality of color variants based on the dominant color by applying color parameters to color components of the dominant color;

generating, for each of the color variants and for each of a plurality of user interface component types, a user interface component color;

identifying a playing state of the video, a current one of the identified frames before a current playing point in the video, and a next one of the identified frames after a the current playing point in the video;

identifying first user interface component colors based on the playing state and on the user interface component colors generated for the current identified frame;

identifying second user interface component colors based on the playing state and on the user interface component colors generated for the next identified frame; and

setting one or more colors of the one or more user interface components of the video player based on the identified first user interface component colors and on the identified second user interface component colors.

2. A computer-implemented method comprising:

determining a portion selection of a frame of a video;

identifying a dominant color of the portion selection;

generating a plurality of color variants based on the dominant color;

identifying a playing state of the video;

selecting one of the color variants based on the playing state; and

setting one or more colors of one or more user interface components of a video user interface based on the selected color variant.

3. The computer-implemented method of claim 2, wherein determining the portion selection of the frame of the video comprises a portion of the frame of the video that is adjacent to a user interface component display area comprising one or more of the user interface components of the video user interface.

4. The computer-implemented method of claim 2 or 3, wherein determining the portion selection of the frame of the video comprises:

determining a dimension of the frame of the video;

determining a position of a user interface component display area comprising one or more of the user interface components of the video user interface;

determining a dimension for the portion selection, the dimension for the portion selection proportional to the dimension of the frame of the video; and

selecting a portion of the frame of the video that is adjacent to the user interface component display area, the portion of the frame having the dimension for the portion selection.

5. The computer-implemented method of any one of claims 2 to 4, wherein determining the portion selection of the frame of the video comprises:

determining a dimension of a user interface component display area comprising one or more of the user interface components of the video user interface;

determining a position of the user interface component display area; and

selecting a portion of the frame of the video that is adjacent to the user interface

component display area, a dimension of the portion of the frame of the video proportional to the dimension of the user interface component display area.

6. The computer-implemented method of any one of claims 2 to 5, wherein determining the portion selection of the video comprises identifying a sematic boundary of pixels of the frame of the video.

7. The computer-implemented method of any one of claims 2 to 6, wherein identifying the dominant color of a portion selection comprises:

partitioning colors of pixels of the portion selection into a plurality of color partitions;

identifying a color partition having a greatest number of the pixels of the portion selection; and

averaging the pixels of the identified color partition.

8. The computer-implemented method of any one of claims 2 to 7, wherein generating the plurality of color variants based on the dominant color comprises:

identifying color parameters corresponding to the color variants; and

applying the color parameters to color components of the dominant color.

9. The computer-implemented method of any one of claims 2 to 8, wherein the setting colors of the user interface components of the video user interface based on the selected color variant comprises:

generating, for each of a plurality of user interface component types, a user interface component color for each of the color variants; and

setting the colors of the video user interface using the user interface component colors for the color variant selected based on the playing state.

10. The computer-implemented method of any one of claims 2 to 9, further comprising determining a second dominant color, and a second plurality of color variants based on the second dominant color, for a second frame of the video.

11. The computer-implemented method of claim 10, wherein setting the colors of the user interface components of the video user interface comprises:

identifying a current time within the playing of the video;

determining a first time difference of the current time from a time in the video corresponding to the first frame, and a second time difference of the current time from a time in the video corresponding to the second frame;

interpolating user interface colors based on the first time difference, the second time difference, the dominant color, and the second dominant color.

12. A non-transitory computer-readable storage medium storing computer executable instructions that when executed by a computer will cause the computer to carry out a method according to any one of the preceding claims.

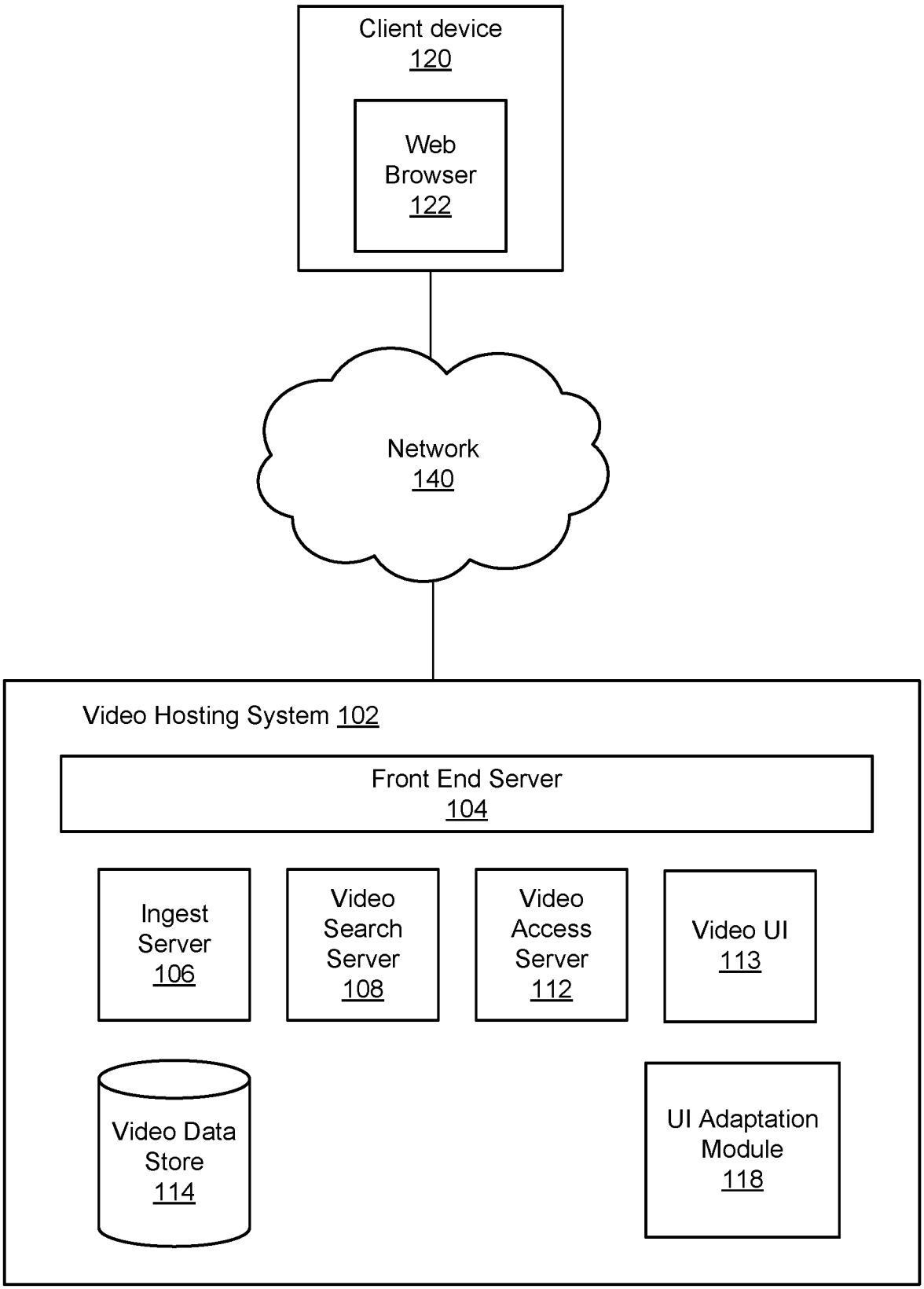
Client device
120
Web
Browser
122
Network
140
Video Hosting System 102
Front End Server
104
Ingest
Server
106
Video
Search
Server
108
Video
Access
Server
112
Video UI
113
Video Data
Store
114
UI Adaptation
Module
118

FIG. 1

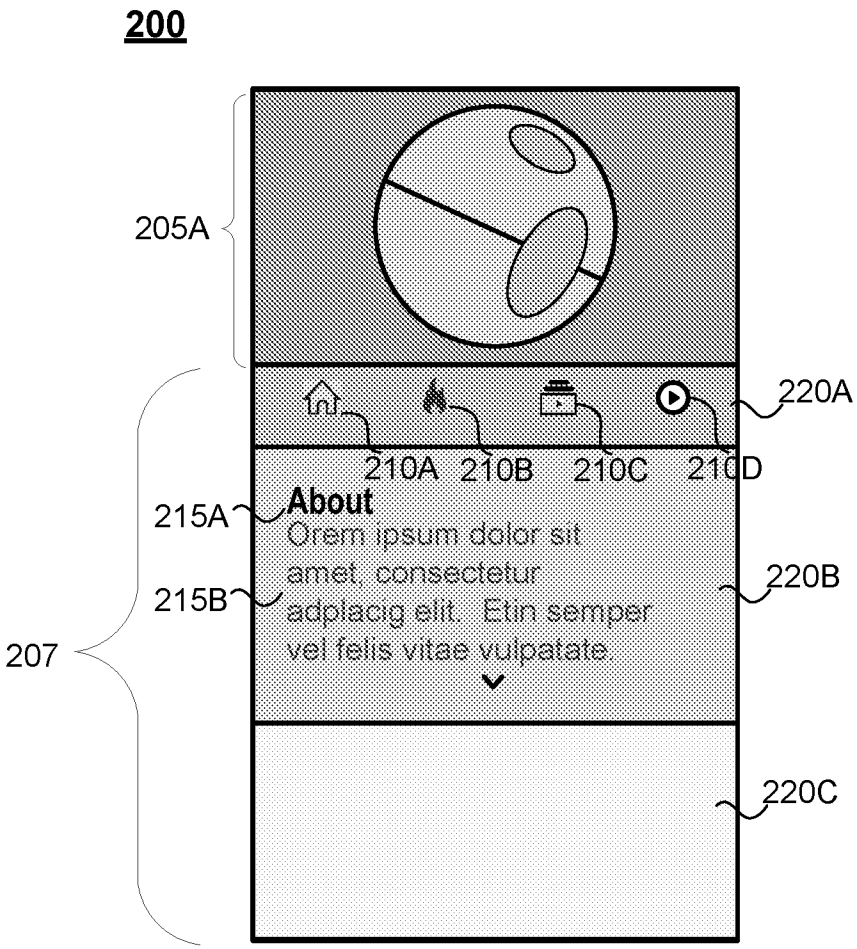
200
205A
220A
210A
210B
210C
210D
215A
About
Orem ipsum dolor sit amet, consectetur adplacig elit. Etin semper vel felis vitae vulpatate.
215B
220B
207
220C

FIG. 2A

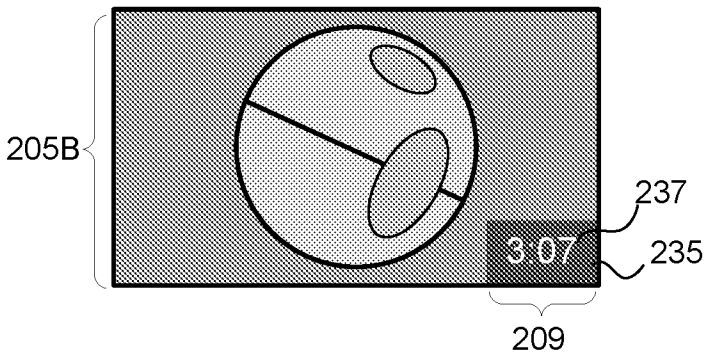
205B
237
3:07
235
209

FIG. 2B

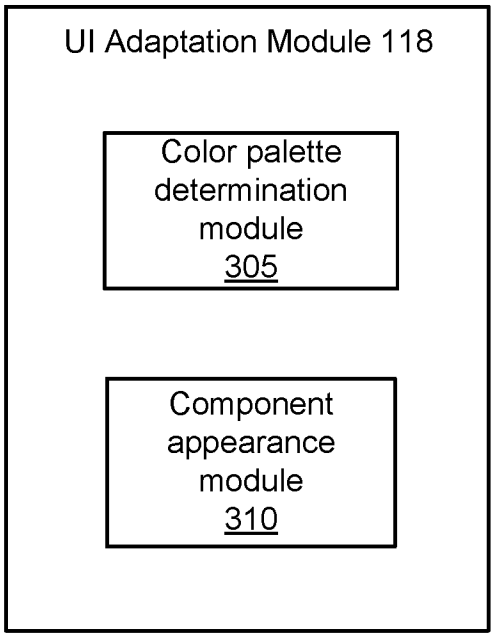
UI Adaptation Module 118
Color palette determination module 305
Component appearance module 310

FIG. 3

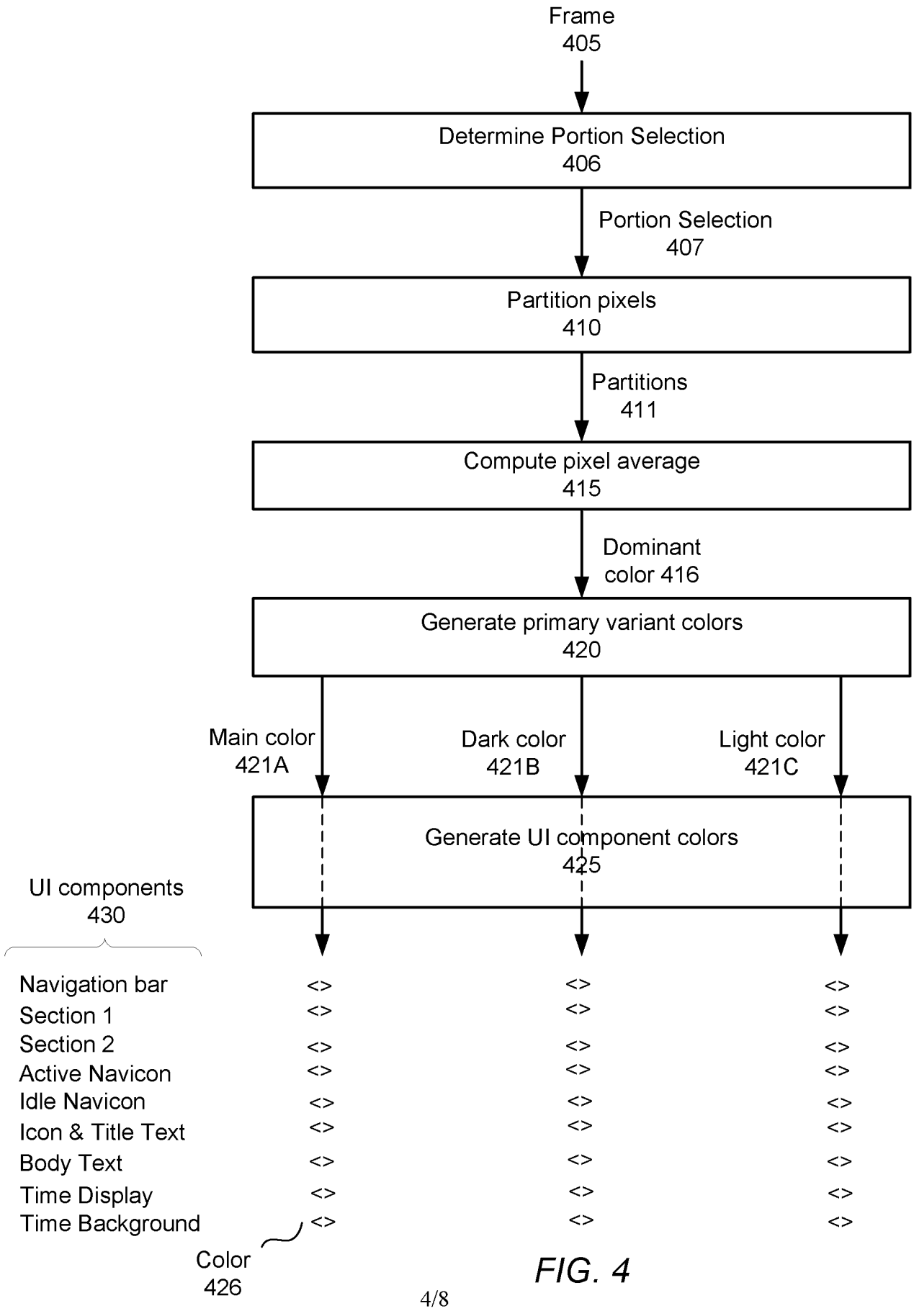
Frame
405
Determine Portion Selection
406
Portion Selection
407
Partition pixels
410
Partitions
411
Compute pixel average
415
Dominant
color 416
Generate primary variant colors
420
Main color
421A
Dark color
421B
Light color
421C
Generate UI component colors
425
UI components
430
Navigation bar
Section 1
Section 2
Active Navicon
Idle Navicon
Icon & Title Text
Body Text
Time Display
Time Background
Color
426

FIG. 4

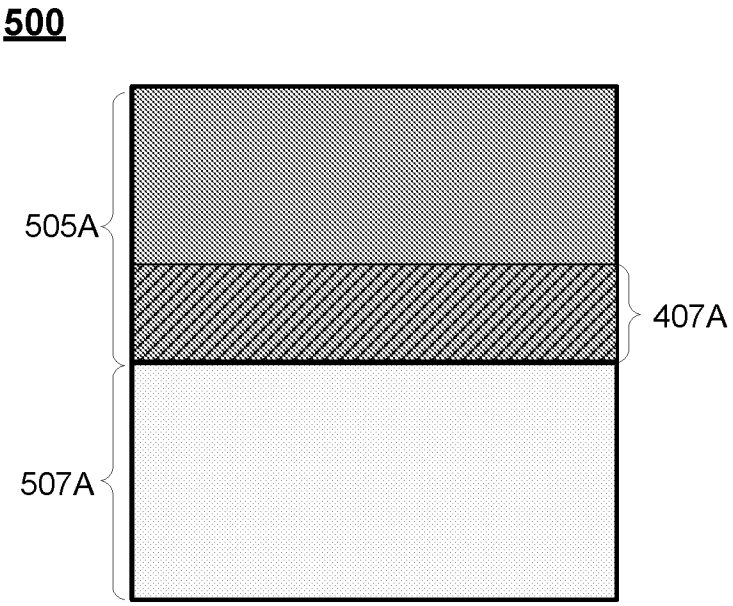

FIG. 5A

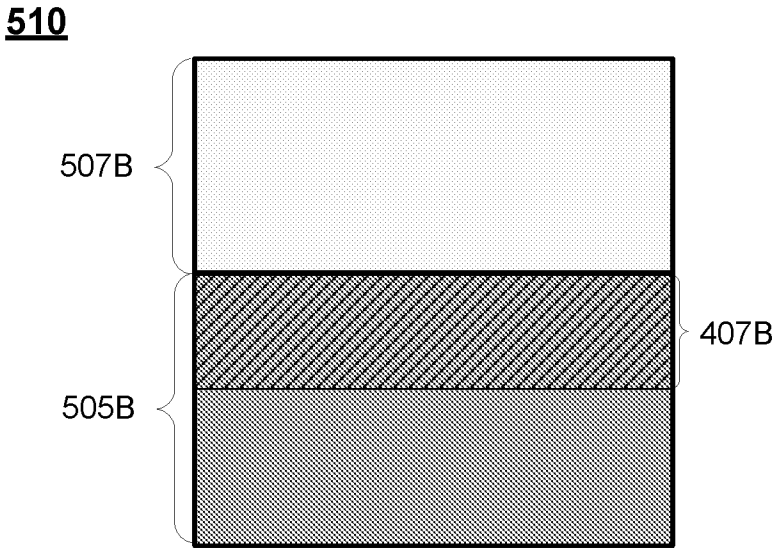

FIG. 5B

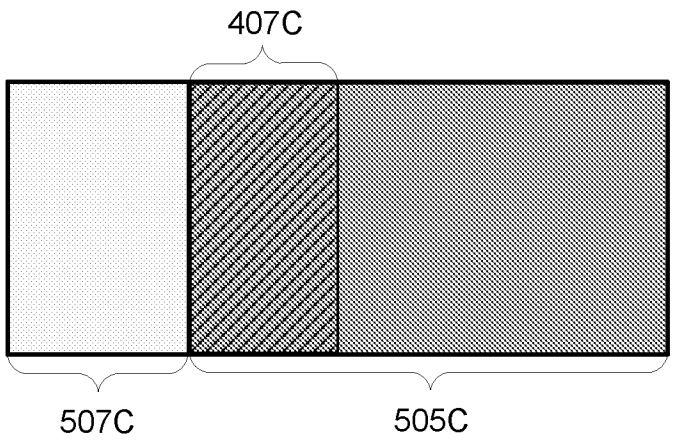

FIG. 5C

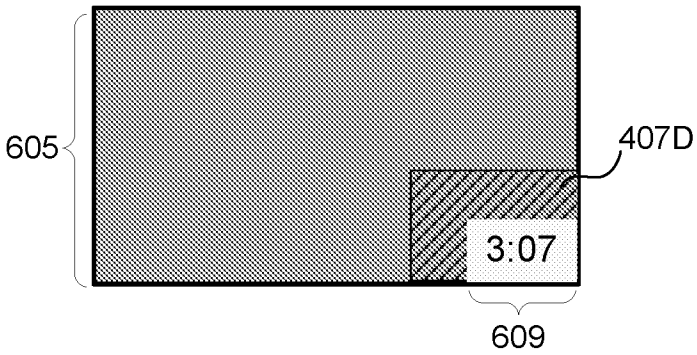

FIG. 6

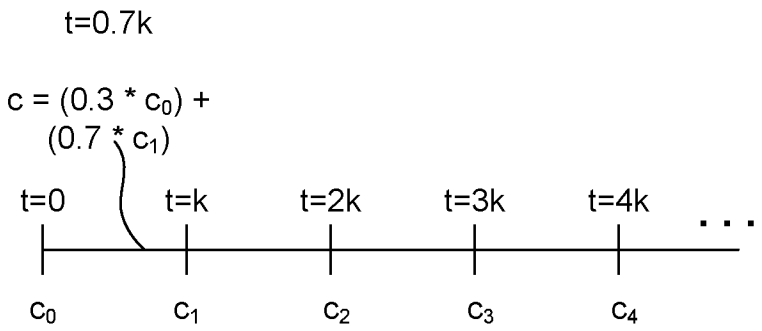

FIG. 7

INTERNATIONAL SEARCH REPORT

International application No.
PCT/US2017/054014

A. CLASSIFICATION OF SUBJECT MATTER

H04N 21/431 (2011.01) ***G06F 3/14 (2006.01)*** ***G06F 3/048 (2013.01)***

According to International Patent Classification (IPC)

B. FIELDS SEARCHED

Minimum documentation searched (classification system followed by classification symbols)

H04N, G06F

Documentation searched other than minimum documentation to the extent that such documents are included in the fields searched

Electronic data base consulted during the international search (name of data base and, where practicable, search terms used)

FAMPAT: color, play state, video, media, frame, user interface, UI, control panel, information panel, change, adapt, play state, play mode, 颜色，色彩，变色，视频，媒体，帧，调节，改变，变换，窗口，界面，播放模式，播放状态 and other related terms.

C. DOCUMENTS CONSIDERED TO BE RELEVANT

Category*	Citation of document, with indication, where appropriate, of the relevant passages	Relevant to claim No.
Y	CN 106101810 A (QINGDAO HISENSE ELECTRIC CO LTD) 9 November 2016 Figs. 1A, 1B; Paragraphs [0020], [0032], [0042], [0046], [0047], [0062], [0064]-[0065], [0071], [0074], [0081], [0085], [0096] of the original non-English language document (a machine translation is enclosed **only** for your reference)	1-12
Y	CN 104918098 A (FUZHOU ROCKCHIP SEMICONDUCTOR) 16 September 2015 Paragraphs [0002]-[0003], [0007] of the original non-English language document (a machine translation is enclosed **only** for your reference)	1-12
A	EP 2076031 A1 (VESTEL ELEKT SANAYI VE TICARET A. S.) 1 July 2009 The whole document particularly paragraph [0016].	
A	CN 104967923 A (BEIJING QIYI CENTURY SCIENCE & TECHNOLOGY CO LTD) 7 October 2015 The whole document particularly paragraphs [0053]-[0057] of the original non-English language document (a machine translation is enclosed **only** for your reference)	

☒ Further documents are listed in the continuation of Box C. ☒ See patent family annex.

*Special categories of cited documents:

"A" document defining the general state of the art which is not considered to be of particular relevance

"E" earlier application or patent but published on or after the international filing date

"L" document which may throw doubts on priority claim(s) or which is cited to establish the publication date of another citation or other special reason (as specified)

"O" document referring to an oral disclosure, use, exhibition or other means

"P" document published prior to the international filing date but later than the priority date claimed

"T" later document published after the international filing date or priority date and not in conflict with the application but cited to understand the principle or theory underlying the invention

"X" document of particular relevance; the claimed invention cannot be considered novel or cannot be considered to involve an inventive step when the document is taken alone

"Y" document of particular relevance; the claimed invention cannot be considered to involve an inventive step when the document is combined with one or more other such documents, such combination being obvious to a person skilled in the art

"&" document member of the same patent family

Date of the actual completion of the international search	Date of mailing of the international search report
11/01/2018 *(day/month/year)*	18/01/2018 *(day/month/year)*

Name and mailing address of the ISA/SG

IPOS INTELLECTUAL PROPERTY OFFICE OF SINGAPORE

Intellectual Property Office of Singapore
51 Bras Basah Road
#01-01 Manulife Centre
Singapore 189554

Email: pct@ipos.gov.sg

Authorized officer

Cai Chengjie (Dr)

IPOS Customer Service Tel. No.: (+65) 6339 8616

INTERNATIONAL SEARCH REPORT

International application No.
PCT/US2017/054014

C (Continuation). DOCUMENTS CONSIDERED TO BE RELEVANT

Category*	Citation of document, with indication, where appropriate, of the relevant passages	Relevant to claim No.
A	US 8091038 B1 (JOHNSON E. ET AL.) 3 January 2012 The whole document.	
A	US 8890886 B2 (KRIESE J. ET AL.) 18 November 2014 The whole document.	
A	US 2007/0229531 A1 (PARK J. H. ET AL.) 4 October 2007 The whole document.	

INTERNATIONAL SEARCH REPORT

Information on patent family members

International application No.

PCT/US2017/054014

Note: This Annex lists known patent family members relating to the patent documents cited in this International Search Report. This Authority is in no way liable for these particulars which are merely given for the purpose of information.

Patent document cited in search report	Publication date	Patent family member(s)	Publication date
CN 106101810 A	09/11/2016	NONE	
CN 104918098 A	16/09/2015	NONE	
EP 2076031 A1	01/07/2009	AT 487324 T TR 200709081 A2	15/11/2010 21/07/2009
CN 104967923 A	07/10/2015	NONE	
US 8091038 B1	03/01/2012	US 8379006 B1	19/02/2013
US 8890886 B2	18/11/2014	US 2015/070378 A1	12/03/2015
US 2007/0229531 A1	04/10/2007	KR 100678101 B1	26/01/2007