(12) UK Patent Application (19) GB (11) 2 178 271 A

(43) Application published 4 Feb 1987

(21) Application No 8518684

(22) Date of filing 24 Jul 1985

(51) INT CL[4]
H04J 3/16

(52) Domestic classification (Edition I)
H4M N

(56) Documents cited
GB 1544655 GB 1282318 EP A2 0084125
US 4205200 US 4093823

(58) Field of search
H4M
Selected US specifications from IPC sub-class H04J

(71) Applicants
STC plc

(Incorporated in United Kingdom)

190 Strand, London WC2R 1DU

(72) Inventor
Robert Walter Alister Scarr

(74) Agent and/or Address for Service
S. R. Capsey, STC Patents, Edinburgh Way, Harlow, Essex CM20 2SH

(54) Statistical multiplexing

(57) In a variable bit rate switching network which can handle both speech and data, and which uses statistical multiplexing, the activity state of the channels within the multiplex are conveyed by bit map signalling. This uses a burst of signalling information sent during the cycle of the system prior to that to which it relates, thus minimizing delays in the system.

In the system shown, two levels of multiplexing are used, with separate switch trains in each switching node. One or more low order multiplexes after demultiplexing from a high order multiplex are switched by the low order multiplex switch train, and one or more channels after handling by the low order switch train are remultiplexed into the high order multiplex.

GB 2 178 271 A

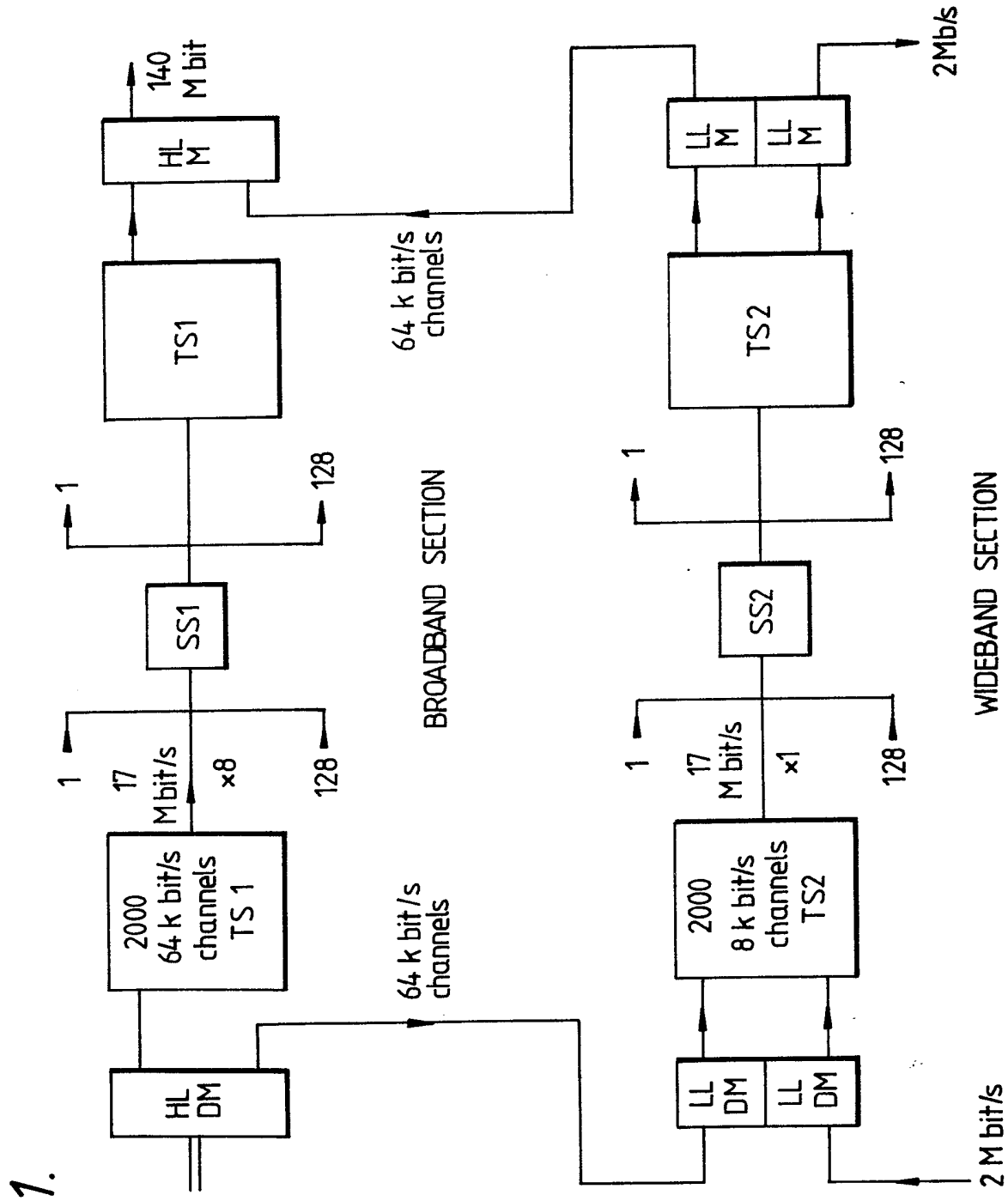
140 M bit
HL M
TS1
1
128
SS1
1
17 M bit/s
×8
128
2000 64 k bit/s channels TS 1
HL DM
64 k bit/s channels
64 k bit/s channels
BROADBAND SECTION
2Mb/s
LL M
LL M
TS2
1
128
SS2
1
17 M bit/s
×1
128
2000 8 k bit/s channels TS2
LL DM
LL DM
2 M bit/s
WIDEBAND SECTION

Fig.1.

Fig.2.

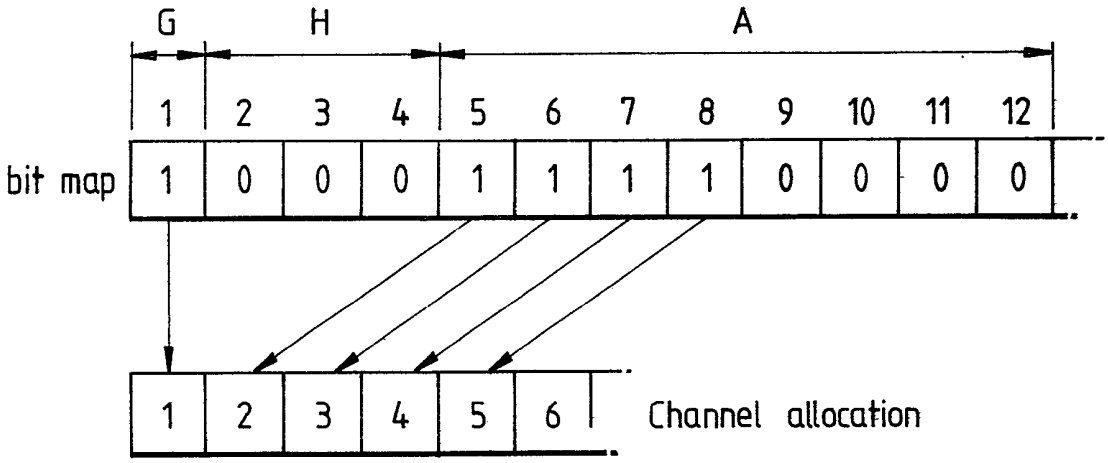
G
H
A
1 2 3 4 5 6 7 8 9 10 11 12
bit map
1 0 0 0 1 1 1 1 0 0 0 0
1 2 3 4 5 6
Channel allocation

Fig.3.

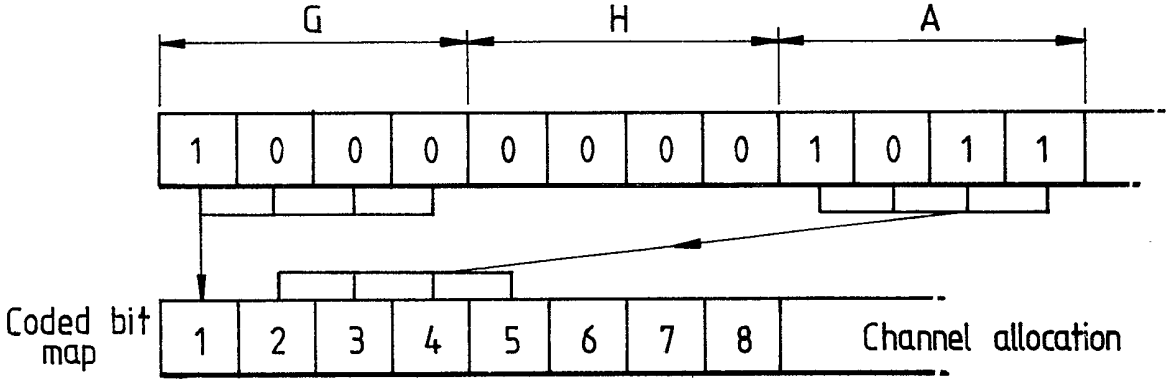
G
H
A
1 0 0 0 0 0 0 0 1 0 1 1
Coded bit map
1 2 3 4 5 6 7 8
Channel allocation

SPECIFICATION

Statistical multiplexing

This invention relates to an automatic telecommunication system, in which so-called statistical multiplexing is used.

Statistical multiplexing is a form of multiplexing in which the information rate of the transmission medium onto which traffic is multiplexed is less than the sum of the information rates of the (input) channels that are being multiplexed. It therefore depends on the statistical nature of traffic origination (i.e. it in effect applies Erlang's formula), and implies that a given input channel does not have a predetermined position in the multiplex structure, contrary to what is generally the case for conventional multiplexing.

Because channel assignments are not fixed, a statistical multiplexer needs to provide signalling information to the demultiplexer on the current state of channel allocations. Thus signalling information can be included with the data which is then sent as a "packet", or it can be sent separately. The term "statistical multiplexing" is sometimes used in the sense of covering both possibilities, but in the current context is only intended to cover the separate signalling case.

According to the invention there is provided an automatic telecommunication system, which includes switching nodes serving time division multiplex systems each of which itself serves a number of users of the system, in which the bandwidth of some at least of the channels allocated to the users of the system can be varied by varying the number of bits in the TDM cycle allocated to said users, in which for each multiplex frame of a said multiplex system there is a burst of signalling information which includes bits which together form a bit map indicative of the allocation of the intelligence-conveying channels to the respective system users, the allocation of said channels to some at least of the users being varied automatically in accordance with the current bandwidth requirements of the respective users.

An embodiment of the invention will now be described with reference to the accompanying drawing, in which

Fig. 1 is a highly simplified block diagram of a switching node embodying the invention.

Figs. 2 and 3 are explanatory timing diagrams.

With the varied services which are expected of modern telecommunication systems a considerable degree of flexibility is needed. Thus these services range from speech, and broadband services such as video, to high speed and low speed data. Hence variable bit rate systems are fashionable.

Time division multiplex of the so-called statistical multiplexer (SM) type is used in the system to be described herein. Such a system uses both low order and high order multiplexes, and we assume that a low order multiplex has a line rate of 2.048 Mb/s, while a high order multiplex might have a line rate of 34 Mb/s, or more. A low order multiplex can be fitted into, or "super-multiplexed" into, higher order multiplexes on the basis of an integral number of higher order multiplex channels.

In the low order multiplex, the "basic" frame rate is 8KHz (125μs), with a "super-frame" rate of 250 Hz (4 msecs), channel bandwidth being 8 Kb/s. Eight channels can be used, inter alia, as a single speech circuit, but the bandwidth can be allocated in integer multiples of 8 Kb/s, and also in binary sub-multiples of 8 Kb/s.

Signalling is handled in a bit map manner where bursts of information have to be conveyed, using a signalling frame which would, in effect, "tell" the recipience of the bit stream how the various channels in the super frame are allocated. Such a signalling burst may conveniently be sent at a superframe rate, using a "header" of bits in each complete super frame dedicated to signalling. Sending signalling information at other than superframe rate is possibly but is generally less convenient and transmision cut the superframe rate is assumed unless otherwise stated.

The low order multiplex has an unpacketised and a packetised capability, with packets sent transparently. Message signalling, such as CCITT No. 7, is used for call processing information.

In the case of a higher order multiplex, basic frame and superframe rates are as for the low order multiplex, with a channel bandwidth in one example of 64 Kb/s. The bandwidth can be allocated in integer multiples of 64 Kb/s, and an integral number of the 64 Kb/s channels is dedicated to the low order multiplex. The same burst signalling arrangement is used as in the low order multiplex with the low order multiplex carried transparently in channel. As in the case of the low order multiplex, there is an unpacketised and a packetised capability.

With such a system there is no delay for speech or video sent unpacketised, and packetisation is used for asynchronous and non-network synchronised data. The system gives fast signalling, which gives excellent potential for bandwidth re-allocation of traffic pattern changes and overload. There is also a simple interface for voice traffic to the old network.

Where traffic conditions warrant, the bandwidth can be divided between statistically multiplexed and packet traffic, with either a fixed or a variable partition in a basic frame. Packets might be fragmented, i.e. not confined to a frame, but a connectionless or datagram mode of operation could be allowed, e.g. using "fast select" packets on X25 networks.

At this point we refer to Fig. 1, which shows a system node using the above-discussed arrangements but in which the higher-order multiplex functions at 140 Mbits/secs. Here the higher order multiplex is referred to as the broadband section and the lower order multiplex as the wideband section. In this node the various elements are as follows:

TS 1, of which there are two, are time switches which can handle 2000 channels each of 64 Kb/s, eight bits wide.

TS 2, of which there are also two, are time switches

The drawing(s) originally filed was (were) informal and the print here reproduced is taken from a later filed formal copy.

for 2000 channels each of 8 Kb/s, one bit wide.

SS 1, is a space switch, 128 × 128 crosspoints, each an eight bit crosspoint.

SS 2, is a space switch, 128 × 128 crosspoints, each a single bit crosspoint.

HLDM is a high level demultiplexer, which demultiplexes 64 Kb/s channels out of the 140 Mb/s bit stream for switching purposes. As will be seen, at least one such channel goes to the LLDM, below.

LLDM is a low level demultiplexer, which demultiplexes the 2 Mb/s bit stream, and also the 64 Kb/s bit stream from HLDM to obtain the 8 Kb/s channels which are then switched in the low order multiplex.

HLM is a high level multiplexer, which multiplexes 64 Kb/s channels which have been handled by TS1-SS1-TS1, plus one or more 64 Kb/s channels from LLM, below, onto the 140 Mb/s bit stream.

LLM is a low level multiplexer which multiplexes 8 Kb/s channels which have been handled by TS2-SS2-TS2 on to a 2 Mb/s bit stream.

Note that a node may handle more than one 2 Mb/s multiplex, and also more than one 140 Mb/s multiplex. Note also that a system in which the higher order multiplex is a 34 Mb/s one would be generally similar in essence to the system shown.

Initial call set up, end of call clearance, and "register recall" use messages, as in a system such as that of our Application No. 2139852A (M. T. Shortland 1). However, the signalling strategy whereby the transmitting end of a link "tells" the receiving end about channel allocation uses the repeated transmission of a "bit map" of the status of all potential users. This assumes a channel allocation algorithm based on that status. The receiving end responds to changes of status occurring on consecutive signalling frames of bit map information.

With this bit map approach to signalling, when call activation occurs, a user is assigned a number of bits, i.e. a certain bandwidth, appropriate to his maximum channel demand. Thus, for example, the far end is told that user A has been assigned bits 5-12 on the bit map, and that his destination address is B. Ideally the bit map is sent as a frame header, but in fact it has been found that due to the operations needed at a switching node it is necessary to send the bit map at some point in the *previous* superframe.

Fig. 2 shows an example, in which each bit is regarded as being one channel. Here user G has been assigned bit 1 and is active, and user H has been assigned three channels, 2-4, and is inactive. User A currently wants 4 of his 8 assigned channels (bits). While these conditions exist, G is allocated channel 1, H is allocated no capacity, and A is allocated channels 2 to 5. If H becomes active and needs all his three channels, then A is switched to the use of channels 5 to 8. The ratio of the bits on the bit map to the number of channels plus fractional channels is the signal interpolation (SI) gain, and is set, on the basis of knowledge of traffic behavious, to give a desired level of loss and/or delay.

Note that the signalling rate need not be at the superframe rate, it may be made larger or smaller to correspond with the on-off speech pattern rate.

When a fractional channel is to be allocated, a sub-channel is specified in the initial call set up procedure, and the far end keeps a record of that sub-channel in the superframe and only looks for and handles information in the relevant frames of the superframe. The user's activity bit, which is unique to him, then signals his current activity state.

We now discuss overload, a starting assumption being that the product of the number of users and their peak data rate is limited. When this limit is reached, new calls are refused. This applies across the network, transmit nodes feeding back to originating nodes commands to refuse service even when an originating node is not itself overloaded. Any user with priority service who initiates a call during overload causes an equivalent low priority call to be discontinued. In such a system overload is of a random nature and of short duration.

The preferred technique for packetised data is to use delay in overload conditions, with data delayed to provide extra temporary bandwidth for speech. High speed data synchronised to the network clock should not, however be delayed to give preference to voice traffic. For speech, some bandwidth reductions, e.g. by bit stealing, may be used as may be some limited amount of time clipping at either front end or mid spurt. In general, of course, speech should not be delayed.

For real time video information, an initial assumption is of a variable bit rate system in which transient changes in picture content demand an increased data rate. One method of overload control at the periphery would be to delay changes, but at a transit node it may be necessary to throw information away.

Users of the system connected via high speed links will need to communicate for low speed services with users who only have access via low speed links. Hence the 2 Mb/s multiplex structure is included in the high speed structure, either en bloc or on a channel by channel basis. In the first case a 2 Mb/s complex is regarded as one fixed channel in a high speed structure, while in the other the 2 Mb/s structure is broken down into its constituent channels and interleaved with broadband service channels.

However, a compromise solution has been selected in which the less than 2 Mb/s services are allocated a number of channels in the broadband multiplex concomitant with demand. This assumes that broadband channels are less then 2 Mb/s wide. Such channels are given a fixed portion of the total frame, and signalling can either share a common channel/bandwidth outband, or the signalling for the lower speed services can be contained within the information space allotted to in, inband.

We now give an example of a statistical multiplexer framing and signalling structures based on the preceding discussion.

For the 2.048 Mb/s low order structure, we assume that Channel 0 is used for synchronisation, but that Channel 16 is free for use as desired. The basic channel is 8 Kb/s, so Channel 0 is 8 channels (i.e. sub-channels) in the present terminology, 8 Kb/s being chosen for the bandwidth reduction flexibility it allows with 64 Kb/speech. The lowest sub-channel rate is 250 b/s, which makes the superframe duration 4 ms. This allows 75 and 150 b/s data to be sent packetised on the 250 b/s sub-channel. The signalling

frame rate is also 4 ms., as this gives adequate response to burst events. The frame rate duration is 125 μsecs, so speech is undelayed and is sent sample by sample to give a conventional interface to the old network.

The relatively low basic channel rate has a disadvantage that 8-bit encoded PCM speech needs 8 channels, which is expensive is signalling channel bandwidth using the bit map signalling method. If 8-bit speech channels predominate, it may be preferred to use, Fig. 3, a 4-bit word for each channel which uses an integral number of channels, assuming that channels when allocated are packed according to a preset algorithm. One bit represents the circuit's activity state and the other three the number of channels in use, less one. Thus an active 8-channel circuit has all four bits set. Sub-channels are each represented by one bit. The integral channels as coded fill the signalling frame from the front end and the sub-channels from the rear, normally with an unused gap in the middle (or near the middle). Thus where 45 simultaneous speech and 15 simultaneous users are allowed, we end up with a number of the order of 212 bits per superframe, or 7 bits per frame. This uses 7 of the 248 available channels.

Call set up, clear and recall (i.e. call processing) are signalled by messages using one or more permanently assigned channels with an ability to use up to 8 channels on a statistical basis to deal with peak demands.

The signalling information in this example is transmitted every of 4 ms, and as already indicated it is preferred to send the bit map information in the superframe prior to the one to which it relates. This allows time for the necessary computation and establishment of cross-office paths to occur.

For the higher order multiplex 64 Kb/s channels are used, resulting in the lower order multiplex being assigned up to 31 channels in the higher order multiplex, low order signalling being included. The channels assigned for the low order multiplex can be set semi-permanently active in the higher order multiplex, i.e. treated as a private wire at the higher level.

We now consider the synchronisation methods used where a number of statistically multiplexed links are connected in tandem. Thus when only one links is involved, changes in condition will occur at different times, which is aggravated when two or more links are connected in tandem, since link delays and trans-node delays are involved. This is dealt with by padding the delay at a receiving end to either a full superframe, or in more difficult cases to two superframes.

In order to reduce cross-network delay and the cost of storage associated with frame alignment, albeit at the cost of a somewhat increased processing load, instead of updating the burst information once per superframe for all channels in use, that information is updated in respect of a few of said channels updated in sequence in each basic frame. Thus with 128 such channels, four are updated per frame and the bit map is "distributed" between basic frames in a superframe. However, this distributed information is still sent in the previous superframe.

CLAIMS

1. An automatic telecommunication system, which includes switching nodes serving time division multiplex systems each of which itself serves a number of users of the system, in which the bandwidth of some at least of the channels allocated to the users of the system can be varied by varying the number of bits in the TDM cycle allocated to said users, in which for each multiplex frame of said multiplex system there is a burst of signalling information which includes bits which together form a bit map indicative of the allocation of the intelligence-conveying channels to the respective system users, the allocation of said channels to some at least of the users being varied automatically in accordance with the current bandwidth requirements of the respective users.

2. A system as claimed in claim 1, in which when a call is set up the number of channels allocated to the caller is the maximum available to that caller, in which when the progress of the call indicates that a less number of said channels is needed, the number of channels allocated to that caller is reduced, and in which when a said reduction in the number of channels is effected the channels allocated to calls later in the basic frame are moved forwards in the frame, so that the basic frame tends to fill up from its front end.

3. A system as claimed in claim 1 or 2, in which the burst of signalling information in respect of one superframe is sent during the preceding superframe to give the nodes of the system time to set up and adjust trans-node paths.

4. A system as claimed in claim 1, 2 or 3, in which some at least of the channels used for communications can each be split into two or more narrower bandwidth sub-channels, and in which when such sub-channel allocation is to be used the initial call setting procedure specifies the sub-channel to be used.

5. A system as claimed in claim 4, in which integral channels as taken into use are allocated commencing from the front end of the basic frame while sub-channels as taken into use are allocated commencing from the rear end of the basic frame.

6. A system as claimed in any one of claims 1 to 5, in which call setting and call clearing messages are conveyed via one or more system channels dedicated to such messages.

7. An automatic telecommincation system, which includes switching nodes serving low order multiplexes each of which can handle a number of communications channels and high order multiplexes each of which can handle a number of communication channels greater than a low order multiplex, said nodes being interconnected via high order multiplexes or both high and low order multiplexes, in which each said node includes first switching means for handling high order multiplexes, in which within each said node's switching means the multiplex or multiplexes being handled are switched after they have demultiplexed, in which each said node also includes second switching means for handling low order multiplexes, in which within each said node's second switching means the multiplexes being handled are switched after they have been demultiplexed,

in which one or more channels demultiplexed from a said high order multiplex are switched by the second switching means instead of by the first switching means at the node, in which one or more channels which have been switched by the second switching means are multiplexed into a high order multiplex for transmission from the node, in which the bandwidth of some at least of the channels allocated to the users of the system can be varied by varying the numbers of bit in the TDM frame allocated to the users, and in which for each multiplex frame of a said multiplex there is a burst of signalling information which includes bits which together form a bit map indicative of the allocation of the intelligence-conveying bits to the respective system users, the allocation of the bits to some at least of the user being varied automatically in accordance with the bandwidth requirements of the respective users.

8. A system as claimed in any one of claims 1 to 7, in which the information contained in said bit map is updated in a number of successive basic frames, the updating in respect of each such frame being in respect of some only of the channels to which that information relates.

9. A switching node for use in a system as claimed in any one of the preceding claims.

10. An automatic telecommunications switching system of the TDM type, substantially as described with reference to the accompanying drawing.

11. An automatic telecommunications switching node substantially as described and as shown in Fig. 1 of the accompanying drawing.

New claims or amendments to claims filed on 5th December, 1985.

New or amended claims:—

12. An automatic telecommunication system, which includes switching nodes serving time division multiplex systems each of which itself serves a number of users of the system, in which the bandwidth of some at least of the channels allocated to the users of the system can be varied by varying the number of bits in the TDM cycle allocated to said users, in which for each multiplex frame of a said multiplex system there is a burst of signalling information which includes bits which together form a bit map indicative of the allocation of the intelligence-conveying channels to the respective system users, the allocation of said channels to some at least of the users being varied automatically in accordance with the current bandwidth requirements of the respective users, in which when a call is set up the number of channels allocated to the caller is the maximum available to that caller, in which when the progress of the call indicates that a less number of said channels is needed, the number of channels allocated to that caller is reduced, and in which when a said reduction in the number of channels is effected the channels allocated to calls later in the basic frame are moved forwards in the frame, so that the basic frame tends to fill up from its front end.

Printed in the United Kingdom for Her Majesty's Stationery Office, 8818935, 2/87 18996. Published at the Patent Office, 25 Southampton Buildings, London WC2A 1AY, from which copies may be obtained.