Dec. 26, 1967 I. J. VILCINS 3,360,017

COMBINATION STRAPPING TOOL

Filed July 16, 1965 2 Sheets-Sheet 1

Fig. 1

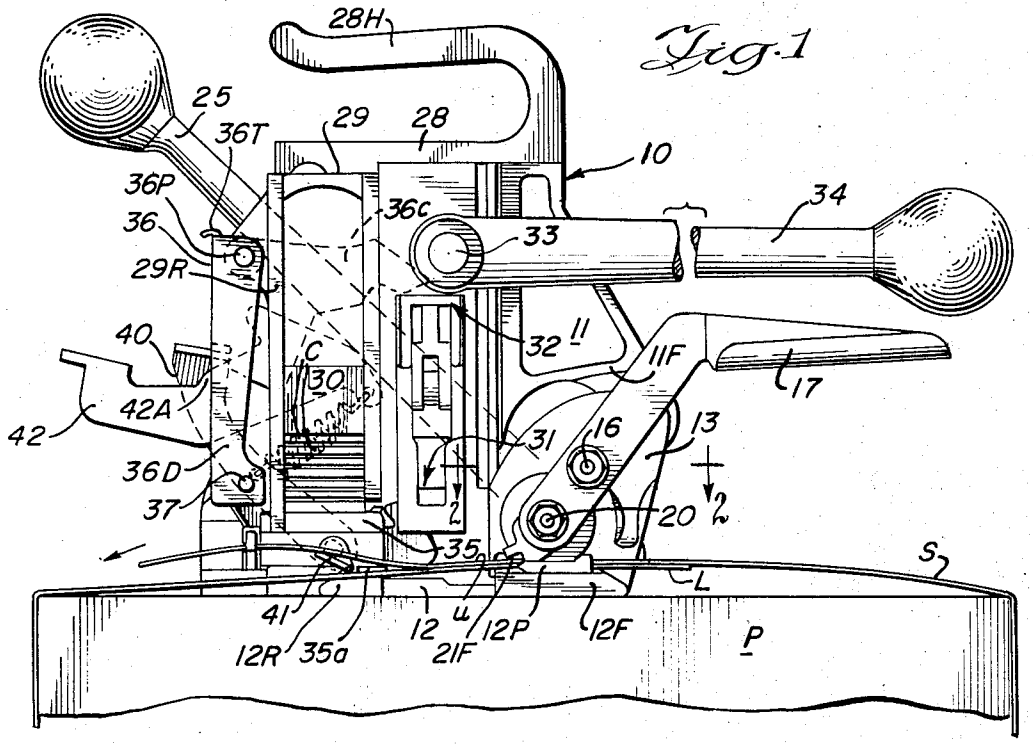

Fig. 2

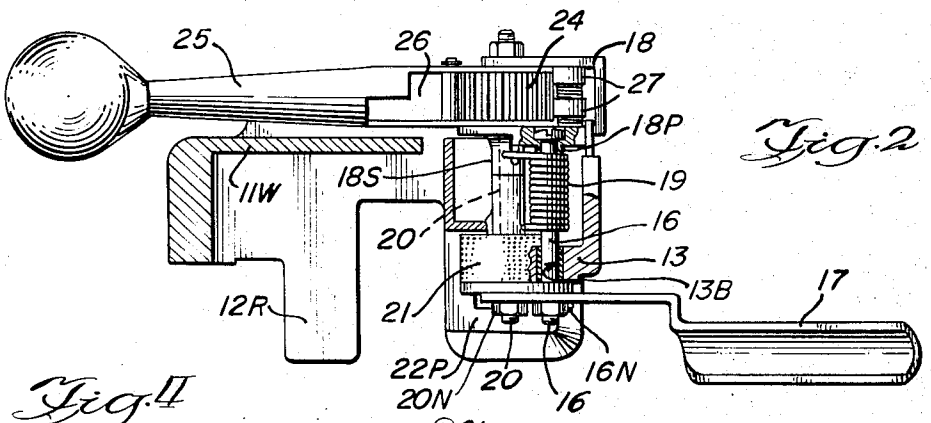

Fig. 4

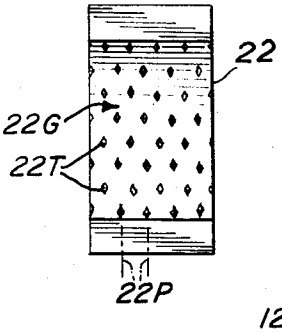

Fig. 5

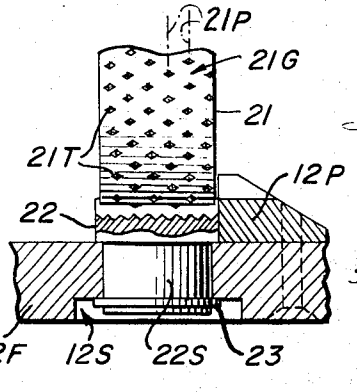

INVENTOR
Ilmar J. Vilcins
By Dressler, Goldsmith, Clement
Gordon & Ladd
ATTORNEYS

Dec. 26, 1967 I. J. VILCINS 3,360,017

COMBINATION STRAPPING TOOL

Filed July 16, 1965 2 Sheets-Sheet 2

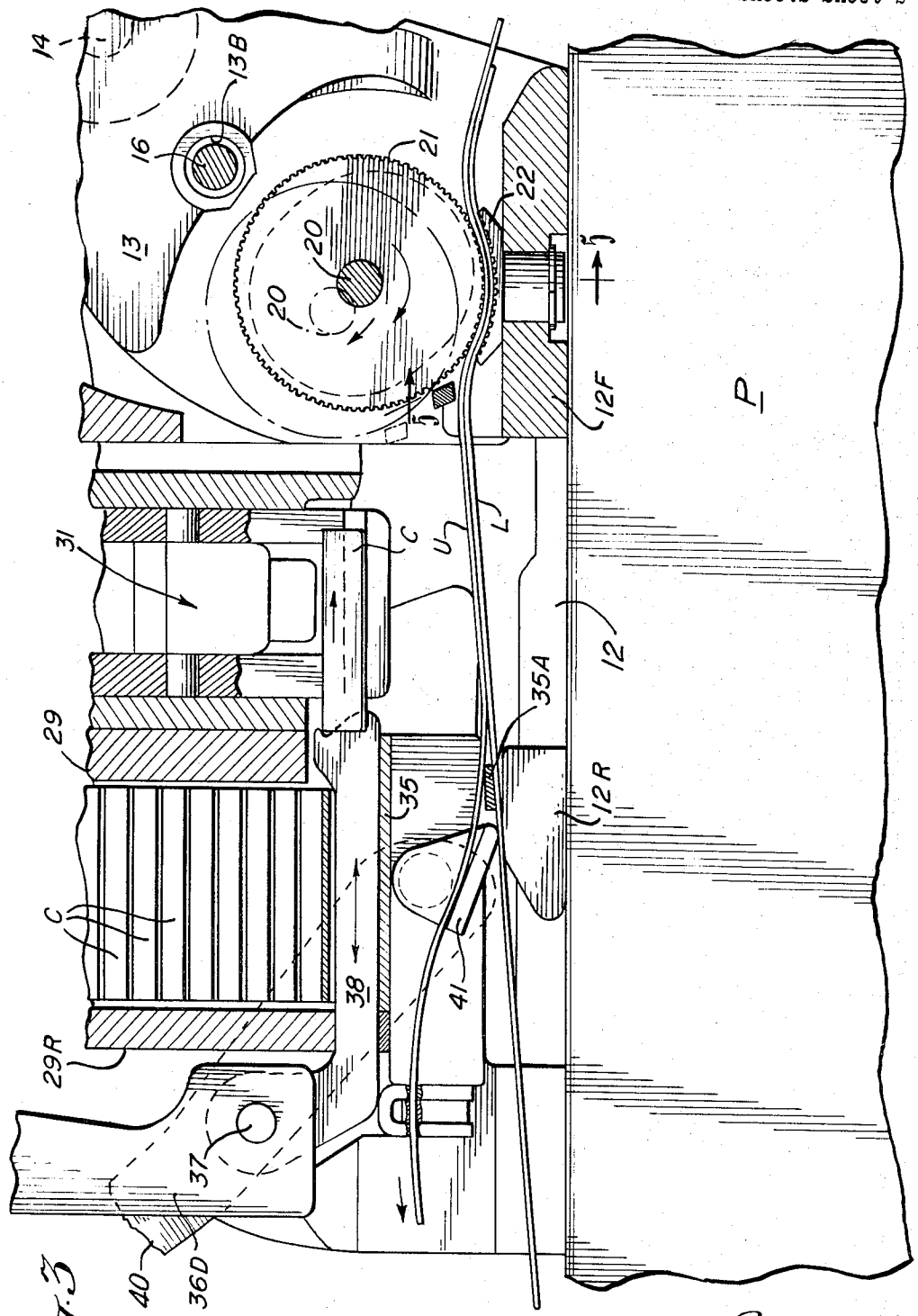

Fig. 3

Inventor
Ilmar J. Vilcins
By Dressler, Goldsmith, Clement, Gordon & Lodd
Attorneys

United States Patent Office 3,360,017
Patented Dec. 26, 1967

3,360,017

COMBINATION STRAPPING TOOL

Ilmar J. Vilcins, Northbrook, Ill., assignor to Signode Corporation, a corporation of Delaware

Filed July 16, 1965, Ser. No. 472,625
6 Claims. (Cl. 140—93.4)

ABSTRACT OF THE DISCLOSURE

A combination strapping tool is disclosed for tensioning opposite ends of a loop of plastic strap, applying a seal on the strap ends and folding the seal into gripping engagement with the strap ends. The main frame of the tool includes a base to contact the object to be strapped and has a pivot shaft mounted above the base and carrying a swing frame at one end, with a feed wheel shaft and feed wheel carried by the swing frame. A tensioning handle and ratchet are carried on the swing frame to drive the feed wheel shaft, the tensioning handle extending along one side of the main frame. A sealer housing, sealer mechanism and sealer drive are mounted on the main frame to be operated by a sealer handle that extends along the other side of the main frame. A reaction handle is mounted on the pivot shaft, has one end connected to the feed wheel shaft and has a hand grip end underlying the sealer handle to be gripped against the sealer handle for holding the feed wheel loaded downwardly during operation of the tensioning handle. An anvil has an arcuate concave rasp tooth surface facing upwardly towards the feed wheel and of greater radius of curvature than the feed wheel which has a similar rasp tooth gripper surface.

This invention relates to combination strap tensioning and sealing tools such as are commonly employed in connection with tying a strap loop around a package or other object and more particularly, the invention is concerned with a combination strap tensioning and sealing tool of the type wherein overlapping upper and lower ends of the strap loop are engaged respectively by a feed wheel and an anvil to enable rotation of the feed wheel to advance the upper strap end while the anvil holds the lower strap end stationary.

In combination strap tensioning and sealing tools of this type, a basic need is to establish a stable slip proof grip between each strap end and the corresponding strap contacting gripper surface. The tendency to slip is greater in the case of plastic strapping as compared with metal and while the invention finds particular utility in conjunction with use of plastic strap material such as polypropylene or nylon, it is to be understood that no limitation with respect to the particular type of strap is intended.

In the most common type of combination tool currently employed, the feed wheel is mounted from a main frame for bodily movement toward and away from the anvil respectively to load and to release the overlapping strap ends. Normally this feed wheel is swingably mounted to approach the anvil at an energizing angle of about 20° from the vertical. In such arrangements as tension is drawn on the strap by rotation of a tensioning handle that is drivingly connected to the feed wheel, a reaction force associated with the handle action tends to lift the feed wheel away from the strap. This lifting action tends to loosen the grip of the feed wheel against the strap end. A reaction handle is provided for use in overcoming this feed wheel lifting action, however, the arrangement nevertheless inherently exposes the strap to slippage. The principles of the present invention are particularly applicable to combination tools for establishing a more reliable strap grip during sealing of the overlapping strap ends. Problems

of achieving stable grip are more pronounced in the case of a tool having a swingably mounted feed wheel of this type, but it should be understood that the invention need not be limited to such tools.

The present invention provides a combination strap tensioning and sealing tool wherein the strap contacting surfaces of the tool have a rasp surface configuration establishing a more effective gripping action against the strap ends.

Another feature of the combination strap tensioning and sealing tool of this invention is that it provides strap contacting surfaces constituted by an array of symmetrically distributed diamond shaped teeth exhibiting a maximum of slip resistance when engaged with straps of plastic or similar materials.

More particularly, the combination strap tensioning and sealing tool of this invention provides a swingably mounted feed wheel movable toward and away from an anvil to approach the same at an energizing angle inclined somewhat from vertical, with the anvil presenting a strap contacting surface that is arcuately concave and generated on a radius of curvature greater than the radius of the feed wheel and wherein the center line of rotation of the feed wheel when in its load position is offset from the axis of rotation of the anvil face in the direction in which the feed wheel advances the strap such that a concentration of pressure between the strap contacting faces encourages greater grip penetration.

Other features and advantages of the invention will be apparent from the following description and claims, and are illustrated in the accompanying drawings which show structure embodying preferred features of the present invention and the principles thereof, and what is now considered to be the best mode in which to apply these principles.

In the accompanying drawings forming a part of the specification, and in which like numerals are employed to designate like parts throughout the same,

FIG. 1 is a side elevation of a combination strap tensioning and sealing tool in accordance with this invention showing the tool threaded with strap and in the position assumed during a tensioning cycle;

FIG. 2 is a fragmentary plan sectional view through the tensioning components of the tool;

FIG. 3 is an enlarged horizontal sectional view through the lower region of the tool;

FIG. 4 is a plan view of a rasp face type curved anvil for contacting the bottom strap end; and

FIG. 5 is a fragmentary section through the anvil and showing the feed wheel in elevation and is taken approximately as indicated on the line 5—5 of FIG. 3.

Referring now to the drawings, for purposes of illustrative disclosure, the invention is shown embodied in a combination strap tensioning and sealing tool which is intended primarily for use with plastic strap, but the principles of the invention are applicable to other embodiments of combination tools. The illustrated tool is designated generally at **10** and is shown in its entirety in FIG. 1. The tool includes a rigid main frame **11** having an elongated base **12** removably secured along its underface to contact a package P that is shown having a strap looped about it in FIG. 1. Opposite ends of the loop of strap S are shown extending along the top of the base **12** and constitute overlapping upper and lower strap ends U and L, respectively. The base **12** has a forward contact foot **12F** and a rearward contact foot **12R**.

The base **12** includes an upstanding forward support wall **13** having a cross bore **13B** (FIG. 2) to receive a pivot shaft **16** having its ends projecting transversely beyond the support wall **13**. At one end the pivot shaft **16** mounts a reaction handle **17** which is secured by a nut **16N** and at the other longer end the pivot shaft **16**

receives a mounting sleeve portion 18P of a cradle type outboard swing frame 18. A torsion spring 19 encircling the mounting portion 18P normally biases the swing frame 18, the pivot shaft 16 and the reaction handle 17 counterclockwise as viewed in FIG. 1.

The swing frame 18 has a stub sleeve 18S aligned with the lower end of the reaction handle 17 and cooperably mounting opposite ends of a feed wheel shaft 20.

A feed wheel 21 is mounted in keyed or splined relation at an intermediate region of the feed wheel shaft 20 to be loaded towards an anvil 22 mounted in an undercut type of stepped diameter mounting socket 12S provided in the front foot 12F, with the anvil 22 having a depending mounting shank 22S passing snugly into the socket 12S and locked by a retaining ring 23 that seats in a peripheral groove in the shank 22S. The feed wheel shaft 20 has one end journaled to rotate in the lower end of the reaction handle 17 and equipped with a retention nut 20N and has its opposite end connected in keyed or splined relation to a ratchet wheel 24 that is cradled in the swing frame 18. The ratchet and feed wheels rotate in unison during strap tensioning. The strap contacting surfaces of the feed wheel 21 and anvil 22 are normally held spaced apart to prevent accidental damage. A spacer plate 12P is fixed on the front foot 12F to engage a spacer finger 21F mounted alongside the feed wheel and determine a minimum clearance.

A tensioning handle 25 is provided for driving the ratchet wheel 24 and, as best seen in FIG. 2, the tensioning handle has a bifurcated drive end flanking the ratchet wheel 24 and journaled on the feed wheel shaft 20 to mount the tensioning handle for swinging movement. An actuating pawl 26 (FIG. 2) carried by the tensioning handle 25 is normally biased to a position for establishing one-way driving engagement with the teeth of the ratchet wheel 24 to establish a drive relation when the tensioning handle is swung clockwise and to allow slippage when the tensioning handle is swung counterclockwise towards the full line position illustrated in FIG. 1. The swing frame 18 also mounts holding pawls 27 for maintaining the ratchet wheel 24 against reverse rotation.

Further clockwise movement of the tensioning handle cams the same about the surface of an abutment pin (not shown) and causes the feed wheel shaft 20 to swing about the pivot shaft 16 as a center and move to the phantom line position of FIG. 3 for lifting the feed wheel 21 farther away from the anvil 22.

The main frame 11 has a top 28 rigidly fixed thereon and including a carrying handle 28H and a seal magaine casting 29 secured thereto to extend downwardly from the top and terminate above the rear foot 12R. The seal magazine casting 29 receives a seal follower pad 30 which has a band spring actuator (not shown) of the usual form to load a stack of seals C for one by one delivery to the bottom of the magazine. The magazine casting 29 is spaced from the front wall 11F of the main frame to define a chamber which houses a sealer jaw assembly 31 within its lower region and a sealer drive mechanism 32 within its upper region. The sealer drive mechanism 32 is connected to actuate the jaw assembly 31 through a seal forming and release cycle. The sealer drive mechanism 32 may be of any known type. In the tool illustrated herein, the drive mechanism 32 is of a rack and pinion type and includes an outboard pinion shaft 33 that receives a sealer handle 34 operable counterclockwise, as viewed in FIG. 1, to effect lowering of the drive mechanism for operating the sealer jaw assembly.

The bottom of the seal magazine is equipped with a floor 35 at an elevation to align the bottom seal of the stack with the upper position of the sealer jaws to enable feeding of a seal for the next cycle as the jaws return to their elevated position following completion of a seal cycle. This floor 35 has an integral underlying cantilever arm 35A extending transversely therebeneath to serve as a separator element between the upper and lower strap ends.

An ejector lever 36 in the form of a bell crank is pivoted externally upon the rear wall 29R of the magazine casting by means of a pivot pin 36P and includes a cam arm portion 36C associated with the rotation of the pinion shaft 33 and an external drive arm 36D extending vertically along the rear wall 29R. The drive arm 36D mounts a pivot shaft 37 at its lower end on which a seal feed finger 38 is mounted, the finger 38 being slidable along the magazine floor 35.

During operation of the sealer handle 34 to fold a seal, the ejector lever 36 and feed finger 38 are retracted and upon return movement of the sealer handle, the ejector lever and feed finger are powered through a seal feed stroke by the action of a torsion spring 36T that encircles the pivot shaft 36P.

A pivotally mounted gripper lever 40 is nested between the closed side of the magazine casting 29 and the side wall 11W of the main frame and operates a laterally extending holding pawl 41 overlying the rear foot 12R for gripping the bottom strap end L against the rear foot. The gripper lever 40 has a handle end exposed at the rear side of the tool and engageable by the retraction movement of the ejector lever 36 to swing the holding pawl to a position spaced above the rear foot. A trigger lever 42 positioned generally alongside the gripper lever 40 has an intermediate abutment 42A to catch and hold the gripper lever at its retracted position. The trigger lever 42 is manually operable to release the gripper lever for securing a bottom strap end against the rear foot.

For initially loading the tool, the tensioning handle 25 is rotated counterclockwise from the position illustrated in FIG. 1 thereby lifting the swing frame 18 in a rotary movement about the axis of the pivot shaft 16. This lifting action on the feed wheel provides clearance between the anvil 22 and the periphery of the feed wheel 21 to accommodate insertion of the overlapping strap ends. The elevation of the feed wheel is opposed by the torsion spring 19 so that upon release of the tensioning handle 25, the feed wheel 21 is automatically impressed upon the now inserted strap ends.

During the tensioning cycle, the operator exerts an upward force on the reaction handle 17 to tip the tool forwardly or countetrclockwise during downward or clockwise travel of the tensioning handle 25, as viewed in FIG. 1, to overcome the tendency of the feed wheel to rise from the strap. This allows the operator more effectively to control the cooperation of the feed wheel 21 and the upper strap end U.

While the function of the reaction handle 17 is to maintain the feed wheel 21 impressed toward the anvil and thus serves as an aid in preventing strap slippage, such slippage can occur for a number of reasons. The tool is provided with particularly effective strap contacting gripper surfaces on the feed wheel 21 and anvil 22 for overcoming the slip problems associated with the lifting action occurring during tensioning and also for overcoming the slip problems associated with the physical characteristics of certain types of strapping.

The anvil 22 is provided with a strap contacting gripper surface 22G having a uniformly distributed rasp teeth array characterized by parallel rows of teeth 22T, such rows extending in the plane of rotation of the feed wheel 19. Phantom lines 22P are represented in FIG. 4 to indicate the direction line of certain of these parallel rows of teeth. It may be noted that each of these rows is staggered in its transverse relationship to the immediately adjacent row and is aligned in its transverse relationship to the next adjacent or second row. Each of the anvil teeth 22T is diamond shaped in face view to present a central crest.

The feed wheel 21 is provided with a strap contacting gripper surface 21G having a uniformly distributed rasp teeth array characterized by parallel rows of teeth 21T,

such rows extending in the plane of rotation of the feed wheel 21. Phantom lines 21P are represented in FIG. 5 to indicate the direction line of certain of these parallel rows of teeth. It may be noted that each of these rows is staggered in its transverse relationship to the immediately adjacent row and is aligned in its transverse relationship to the next adjacent or second row. Each of the feed wheel teeth is also diamond shaped in face view to present a central crest.

The gripper surface 22G of the anvil faces generally upwardly towards the lower region of the cylindrical gripper surface 21G presented by the feed wheel. The anvil gripper surface 20G is of concave arcuate form as best seen in FIG. 3, it being generated on a radius of curvature slightly greater than the radius of curvature of the gripper surface of the feed wheel to enable the effective strap contacting area of these gripper surfaces to vary as the centers of curvature of these gripper surfaces assume various positions determined by the thickness of the strap being handled by the tool.

The effective gripper surface area is greater when the centers of curvature are in registry and becomes increasingly concentrated when the centers of curvature are out of registry. This is desirable because for the same tool, the force of each tooth is greater when the loading pressure is over the concentrated areas than when it is over an expanded area. Hence the teeth penetrate the strap more deeply for the concentrated area relationships that are associated with thicker strapping. The gripper surface should, therefore, be capable of establishing greater grip where thicker strapping is employed to enable the tool to develop greater tensioning force on thicker strapping.

Thus, while preferred constructional features of the invention are embodied in the structure illustrated herein, it is to be understood that changes and variations may be made by those skilled in the art without departing from the spirit and scope of the appended claims.

What is claimed is:

1. A combination strap tensioning tool of the type having a main frame, a base having a transverse fore foot portion to contact a package being tied with a strap loop that has opposite strap ends overlapping and extending in opposite directions above the fore foot portion, a strap feed wheel mounted from the main frame at a location above the fore foot portion for bodily swinging movement toward and away from the fore foot portion, said fore foot portion having an anvil mounted therein and presenting a concave arcuate gripping surface facing generally upwardly towards a cylindrical gripper surface presented by the feed wheel for underneath engagement with the lower strap end concurrently with overhead gripping engagement of the feed wheel with the upper strap end, means movable bodily with the feed wheel and rotatable to drive the same in one direction to draw the upper strap end in a loop tightening direction, seal storage magazine structure spaced from the feed wheel to provide a fore and aft intermediate chamber, a sealer jaw assembly in a lower region of said chamber and a sealer drive in an upper region of the chamber and connected to actuate the jaw assembly, said magazine structure having a floor spaced above the base and supporting a resiliently downwardly biased stack of seals by contact with the bottom seal of the stack, and seal feed mechanism responsive to operation of the sealer drive and including a finger retractable along said floor during closure of the jaw assembly and spring means for returning the finger to feed a seal after the jaw assembly opens.

2. A combination strap tensioning tool of the type having a main frame, a base having a transverse fore foot portion to contact a package being tied with a strap loop that has opposite strap ends overlapping and extending in opposite directions above the fore foot portion, a strap feed wheel mounted from the main frame at a location above the fore foot portion for bodily swinging movement toward and away from the fore foot portion, said fore foot portion having an anvil mounted therein and presenting a concave arcuate gripping surface having a radius of curvature slightly greater than and facing generally upwardly towards a cylindrical gripper surface presented by the feed wheel for underneath engagement with the lower strap end concurrently with overhead gripping engagement of the feed wheel with the upper strap end, means movable bodily with the feed wheel and rotatable to drive the same in one direction to draw the upper strap end in a loop tightening direction, seal storage magazine structure spaced from the feed wheel to provide a fore and aft intermediate chamber, a sealer jaw assembly in a lower region of said chamber and a sealer drive in an upper region of the chamber and connected to actuate the jaw assembly, said magazine structure having a floor spaced above the base and supporting a resiliently downwardly biased stack of seals by contact with the bottom seal of the stack, and seal feed mechanism responsive to operation of the sealer drive and including a finger retractable along said floor during closure of the jaw assembly and spring means for returning the finger to feed a seal after the jaw assembly opens.

3. A combination strap tensioning tool of the type having a main frame, a base having fore and aft spaced foot portions to contact a package being tied with a strap loop that has opposite strap ends overlapping and extending in opposite directions above the foot portions, a strap feed wheel mounted from the main frame at a location above the fore foot portion for bodily swinging movement toward and away from the fore foot portion, said fore foot portion having an anvil mounted therein and presenting a concave arcuate gripping surface facing generally upwardly towards a cylindrical gripper surface presented by the feed wheel for underneath engagement with the lower strap end concurrently with overhead gripping engagement of the feed wheel with the upper strap end, means movable bodily with the feed wheel and rotatable to drive the same in one direction to draw the upper strap end in a loop tightening direction, seal storage magazine structure spaced from the feed wheel to provide a fore and aft intermediate chamber, a sealer jaw assembly in a lower region of said chamber and a sealer drive in an upper region of the chamber and connected to actuate the jaw assembly, said magazine structure having a floor spaced above the aft foot portion and supporting a resiliently downwardly biased stack of seals by contact with the bottom seal of the stack, and seal feed mechanism responsive to operation of the sealer drive and including a finger retractable along said floor during closure of the jaw assembly and spring means for returning the finger to feed a seal after the jaw assembly opens.

4. In a combination strap tensioning tool of the type having a main frame that includes a base having a transverse fore foot portion to contact a package being tied with a strap loop that has opposite strap ends overlapping and extending in opposite directions above the fore foot portion, a pivot shaft mounted from the main frame to extend transversely at a location above the fore foot portion, a feed wheel shaft, a feed wheel on said feed wheel shaft, swing means mounted on one end of said pivot shaft and carrying said feed wheel shaft for swinging movement to move said feed wheel towards and away from the fore foot portion for controlling concurrent gripping of the upper and lower strap ends, a tensioning handle and ratchet means mounted at one end of said feed wheel shaft to locate said tensioning handle along one side of said main frame, said tensioning handle and ratchet means being swingable bodily with the feed wheel shaft and being rotatable about the axis thereof to drive the feed wheel shaft and the feed wheel in unison in a direction to draw the upper strap end in a loop tightening direction, seal storage magazine structure on said main frame and spaced from the feed wheel to provide a fore and aft intermediate chamber, a sealer jaw assembly in a lower region of said chamber and a sealer

drive in an upper region of the chamber and connected to actuate the jaw assembly, said sealer drive having a swingably mounted actuating handle located to extend along the other side of said main frame when in inactive position, said magazine structure having a floor spaced above the base and supporting a resiliently downwardly biased stack of seals by contact with the bottom seal of the stack, and seal feed mechanism responsive to operation of the sealer drive and including a finger retractable along said floor during closure of the jaw assembly and spring means for returning the finger to feed a seal after the jaw assembly opens, the combination therein of a reaction handle having an intermediate portion mounted on the other end of said pivot shaft and having an end portion carrying the other end of said feed wheel shaft, said reaction handle having a hand grip portion underlying and adjacent the sealer actuating handle when the same is in inactive position for joint one hand gripping thereof during tensioning whereby the reaction handle may be squeezed towards the sealer actuating handle to impose manual downward loading of the feed wheel in opposition to strap tension forces tending to lift the feed wheel.

5. In a combination strap tensioning tool in accordance with claim 4 and wherein said fore foot portion has an anvil mounted therein and presenting a concave arcuate rasp tooth gripping surface facing generally upwardly towards said feed wheel for engagement with the lower strap end concurrently with gripping engagement of the feed wheel with the upper strap end.

6. In a combination strap tensioning tool in accordance with claim 4 and wherein said feed wheel presents a cylindrical rasp tooth gripper surface and said fore foot portion has an anvil mounted therein and presenting a concave arcuate rasp tooth gripping surface having a radius of curvature slightly greater than and facing generally upwardly towards the feed wheel gripper surface for engagement with the lower strap end concurrently with gripping engagement of the feed wheel with the upper strap end, each of said gripper surfaces having a uniformly distributed rasp tooth array characterized by parallel rows of teeth extending in the plane of rotation of the feed wheel and staggered in alternately transversely aligned relation, each tooth being diamond shaped to present a central crest.

References Cited

UNITED STATES PATENTS

2,065,427	12/1936	Carlson	140—93.4
3,021,876	2/1962	Hall et al.	140—93.4
3,125,326	3/1964	Ericsson	140—93.4
3,169,011	2/1965	Rutty	100—32

CHARLES W. LANHAM, *Primary Examiner.*

L. A. LARSON, *Assistant Examiner.*