(12) INTERNATIONAL APPLICATION PUBLISHED UNDER THE PATENT COOPERATION TREATY (PCT)

(19) World Intellectual Property Organization
International Bureau

(43) International Publication Date
24 November 2022 (24.11.2022)

WIPO | PCT

(10) International Publication Number
WO 2022/246330 A1

(51) International Patent Classification:
A61B 5/0538 (2021.01) *A61B 5/053* (2021.01)

(21) International Application Number:
PCT/US2022/030596

(22) International Filing Date:
23 May 2022 (23.05.2022)

(25) Filing Language: English

(26) Publication Language: English

(30) Priority Data:
63/191,723 21 May 2021 (21.05.2021) US

(71) Applicant: **ACIES MEDICAL LLC** [US/US]; 2012 Princeton Avenue, Saint Paul, Minnesota 55105 (US).

(72) Inventor: **NORLING, Brian L.**; 1645 Shoreline Drive, Santa Barbara, California 93109 (US).

(74) Agent: **RIES, Kara M.** et al.; 287 East 6th Street, Suite 140, Saint Paul, Minnesota 55101 (US).

(81) Designated States *(unless otherwise indicated, for every kind of national protection available)*: AE, AG, AL, AM, AO, AT, AU, AZ, BA, BB, BG, BH, BN, BR, BW, BY, BZ, CA, CH, CL, CN, CO, CR, CU, CZ, DE, DJ, DK, DM, DO, DZ, EC, EE, EG, ES, FI, GB, GD, GE, GH, GM, GT, HN, HR, HU, ID, IL, IN, IQ, IR, IS, IT, JM, JO, JP, KE, KG, KH, KN, KP, KR, KW, KZ, LA, LC, LK, LR, LS, LU, LY, MA, MD, ME, MG, MK, MN, MW, MX, MY, MZ, NA, NG, NI, NO, NZ, OM, PA, PE, PG, PH, PL, PT, QA, RO, RS, RU, RW, SA, SC, SD, SE, SG, SK, SL, ST, SV, SY, TH, TJ, TM, TN, TR, TT, TZ, UA, UG, US, UZ, VC, VN, WS, ZA, ZM, ZW.

(84) Designated States *(unless otherwise indicated, for every kind of regional protection available)*: ARIPO (BW, GH, GM, KE, LR, LS, MW, MZ, NA, RW, SD, SL, ST, SZ, TZ, UG, ZM, ZW), Eurasian (AM, AZ, BY, KG, KZ, RU, TJ, TM), European (AL, AT, BE, BG, CH, CY, CZ, DE, DK, EE, ES, FI, FR, GB, GR, HR, HU, IE, IS, IT, LT, LU, LV, MC, MK, MT, NL, NO, PL, PT, RO, RS, SE, SI, SK, SM, TR), OAPI (BF, BJ, CF, CG, CI, CM, GA, GN, GQ, GW, KM, ML, MR, NE, SN, TD, TG).

(54) **Title:** ELECTRICAL CONDUCTIVITY SENSOR SYSTEM AND DEVICE WITH REAL-TIME FEEDBACK

FIG. 1

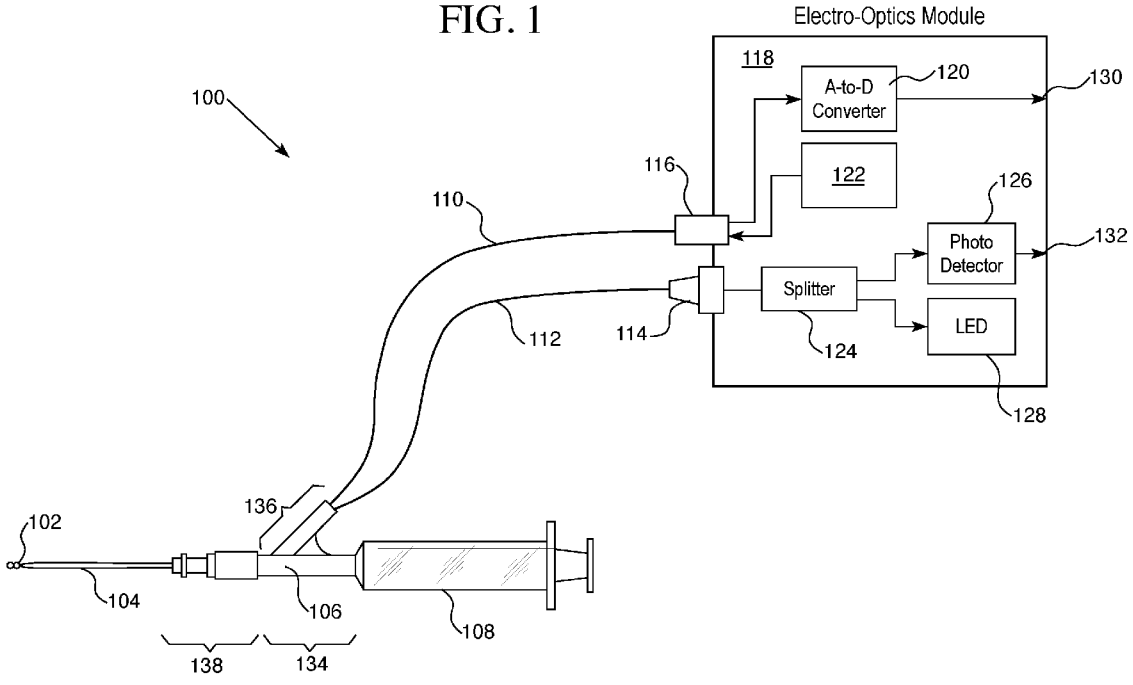

(57) **Abstract:** A real-time impedance measuring needle system having a hollow needle for administering medical fluids having a distal end, and a proximal end, which includes an opening configured to receive medical fluids through a fluid channel. The system may also have at least two conductors located on the distal end of the needle near the opening configured to deliver medical fluids, and at least one detector configured to sense electrical current running between the at least two conductors through a biological tissue.

[Continued on next page]

WO 2022/246330 A1

Declarations under Rule 4.17:

— *as to applicant's entitlement to apply for and be granted a patent (Rule 4.17(ii))*

— *as to the applicant's entitlement to claim the priority of the earlier application (Rule 4.17(iii))*

Published:

— *with international search report (Art. 21(3))*

ELECTRICAL CONDUCTIVITY SENSOR SYSTEM AND DEVICE WITH REAL-TIME FEEDBACK

CROSS-REFERENCE TO RELATED APPLICATIONS

This application claims the benefit of U.S. provisional Application No. 63/191,723, filed May 21, 2021 and titled REAL-TIME FEEDBACK OF RESISTANCE/IMPEDENCE.

The aforementioned patent applications are hereby incorporated by reference, such incorporation being limited such that no subject matter is incorporated that is contrary to the explicit disclosure herein. Any incorporation by reference of documents above is further limited such that no claims included in the documents are incorporated by reference herein. Any incorporation by reference of documents above is yet further limited such that any definitions provided in the documents are not incorporated by reference herein unless expressly included herein.

FIELD OF THE DISCLOSURE

The present disclosure relates to a needle with sensors that is useful for real-time feedback in medical procedures on various tissues.

BACKGROUND

Efforts to improve surgical outcomes and cost structure, particularly with spinal surgery or dental procedures, have led to increased use of minimally invasive procedures. These procedures often use image-guided modalities such as fluoroscopy, CT, nerve stimulators, and, more recently, the Doppler ultrasound test. While often involving less risk than surgery, minimally invasive spinal procedures, pain management procedures, nerve blocks, ultrasound guided interventions, biopsy, and percutaneous placement or open intra-operative placement continue to carry risks of ineffective outcome and iatrogenic injuries, such as infection, stroke, paralysis and death due to penetration of various structures including, but not limited to, organs, soft tissues, vascular structures, and neural tissue such as, catastrophically, the spinal cord. Injuries can occur regardless of practitioner experience because a surgical instrument must proceed through several layers of bodily tissues and fluids to reach the desired space in the spinal canal.

To illustrate, the intrathecal (or subarachnoid) space of the spinal region, where many medications are administered, houses nerve roots and cerebrospinal fluid (CSF) and lays between two of the three membranes that envelope the central nervous system. The outermost membrane of the central nervous system is the dura mater, the second is the arachnoid mater, and the third, and innermost membrane, is the pia mater. The intrathecal space is in between the arachnoid mater and the pia mater. To get to this area, a surgical instrument may need to first get through skin layers, fat layers, the interspinal ligament, the ligamentum flavum, the epidural space, the dura mater, the subdural space, and the intrathecal space. Additionally, in the case of a needle used to administer medication, the entire needle opening must be within the sub-arachnoid space.

Because of the complexities involved in inserting a surgical instrument into the intrathecal space, penetration of the spinal cord and neural tissue is a known complication of minimally invasive spine procedures and spine surgery. Additionally, some procedures require the use of larger surgical instruments. For example, spinal cord stimulation, a form of minimally invasive spinal procedure wherein small wire leads can be inserted in the spinal epidural space, may require that a 14-gauge needle be introduced into the epidural space in order to thread the stimulator lead. Needles of this gauge are technically more difficult to control, posing a higher risk of morbidity. Complications can include dural tear, spinal fluid leak, epidural vein rupture with subsequent hematoma, and direct penetration of the spinal cord or nerves with resultant paralysis. These and other high-risk situations, such as spinal interventions and radiofrequency ablation, can occur when a practitioner is unable to detect placement of the needle or surgical apparatus tip in critical anatomic structures.

At present, detection of such structures is operator dependent, wherein operators utilize tactile feel, contrast agents, anatomical landmark palpation and visualization under image-guided modalities. The safety of patients can rely upon the training and experience of the practitioner in tactile feel and interpretation of the imagery. Even though additional training and experience may help a practitioner, iatrogenic injury can occur independently of practitioner experience and skill because of anatomic variability, which can arise naturally or from repeat procedures in the form of scar tissue. Fellowship training in some procedures, such as radiofrequency ablation, may not be sufficiently rigorous to ensure competence; even with training, outcomes from the procedure can vary considerably. In the case of epidural injections and spinal surgery, variability in the thickness of the ligamentum flavum, width of the epidural space, dural ectasia, epidural lipomatosis, dural septum, and scar tissue all can add challenges to traditional verification methods even for highly experienced operators. Additionally, repeat radiofrequency procedures done when

nerves regenerate, often a year or more later, are often less effective and more difficult because the nerves' distribution after regeneration creates additional anatomic variability.

SUMMARY OF THE INVENTION

An electrical conductivity sensor system is disclosed that provides real-time feedback to a medical practitioner regarding the type of tissue that the tip of a hollow needle is in contact with before injection of a medical fluid. This sensor system can be useful for medical procedures where the precise location of the placement of the medical fluid is desired.

An electrical resistance sensor is disclosed that is useful for real-time tissue identification. The sensor includes a hollow hypodermic needle capable of injecting medical fluids into living tissue. An electrical resistivity probe is at least partially encased within the hollow hypodermic needle. The disclosed sensor also includes a conductivity tip at one end of the electrical resistivity probe. The disclosed sensor is useful for identifying tissue in real-time during a medical procedure. The disclosed sensor can further include a syringe for delivering medical fluids to the hollow hypodermic needle. In some embodiments, a sensor can include two or four electrical resistivity probes all partially encased in the needle.

This disclosure may be useful for measuring over 21 different types of tissue or biological material that have different impedances. Using the unique natural structure of the biological material, the sensors and conductors may be arranged in an advantageous way to allow for impedance measurement across biological tissue to help identify potential needle injection site. The system may further have electrical components for measuring resistance and determining voltage, and send an output for a clinician to read levels or measured results of impendence to determine if the needle is in the correct location prior to delivering fluid or medicine to the patient.

In another aspect, a method for retracting a fiber optic sensor is disclosed that includes providing a fiber optic sensor retraction system according to the disclosure above. The method further includes inserting the needle containing the fiber optic wavelength sensor into a patient and using the fiber optic wavelength sensor to properly place the needle. The method includes retracting the fiber optic wavelength sensor and then administering medical fluids through the hollow needle.

BRIEF DESCRIPTION OF THE DRAWINGS

FIG. 1 is an illustrative example of an embodiment of a real-time sensor system according to the present disclosure.

FIG. 2 is an illustrative example of an embodiment of a real-time sensor system according to the present disclosure.

FIG. 3 is an illustrative example of a cross sectional view of an embodiment of a real-time sensor system according to the present disclosure.

FIG. 4 is an illustrative example of an embodiment of the tip of a real-time sensor system according to the present disclosure.

FIG. 5 is an illustrative example of an embodiment of the tip of a real-time sensor system according to the present disclosure.

FIG. 6 is an illustrative example of an embodiment of a real-time sensor system according to the present disclosure.

FIG. 7 is an illustrative example of an embodiment of a real-time sensor system according to the present disclosure.

FIG. 8 is an illustrative example of an embodiment of a real-time sensor system according to the present disclosure.

FIG. 9 is an illustrative example of an embodiment of a real-time sensor system according to the present disclosure.

FIG. 10 is an illustrative example of an embodiment of a real-time sensor system according to the present disclosure.

FIG. 11 is an illustrative example of an embodiment of a real-time sensor system according to the present disclosure.

FIG. 12 is an illustrative example of an embodiment of a real-time sensor system according to the present disclosure.

FIG. 13 is an illustrative example of an embodiment of a real-time sensor system according to the present disclosure.

FIG. 14 is an illustrative example of a connection between the fiber and processing components according to the present disclosure.

FIG. 15 is an illustrative example of a circuit for measuring resistance according to the present disclosure.

FIG. 16 is an illustrative example of a circuit for measuring resistance with multiple resistors, according to the present disclosure.

DETAILED DESCRIPTION

The present disclosure relates to a real-time impedance measuring needle system used to detect biological substances, such as bodily fluids and tissues, including blood. Various embodiments of real-time impedance measuring needle systems are described in detail with reference to the drawings, wherein like reference numerals may represent like parts and assemblies throughout the several views. Reference to various embodiments does not limit the scope of the real-time impedance measuring needle system disclosed herein. Additionally, any examples set forth in this specification are not intended to be limiting and merely set forth some of the many possible embodiments for the real-time impedance measuring needle system. It is understood that various omissions and substitutions of equivalents are contemplated as circumstances may suggest or render expedient, but these are intended to cover applications or embodiments without departing from the spirit or scope of the disclosure. Also, it is to be understood that the phraseology and terminology used herein are for the purpose of description and should not be regarded as limiting.

Fiber optic waveguides can be placed in the interior of hollow needles useful in medical procedures. The proper placement of the needles can be critical in the success of medical procedures such as surgical procedures on the nervous system (i.e. spinal surgery) or dental procedures. The fiber optic waveguide can be used as part of a sensor system that can detect important biological structures. For example, when trying to inject an anesthetic into a patient in a dental setting, it can be desirable to avoid injecting the medication into a blood vessel, which can cause negative undesirable systemic reactions in a patient. A fiber optic sensor in the injection needle can be a part of a detection system that detects iron ions (in blood, for example) and can indicate the improper placement of the needle. In this case the needle can be relocated so that the anesthetic is properly injected. In some embodiments, the sensor may be located level with the needle tip or bevel. This location may allow the sensor to detect blood or other biomarkers at or near the tip of the needle, which is where the medicine or fluid would be delivered.

In another example, spinal surgeons may want to locate various biological structures when placing a needle for administration of a medicament. In these cases, the surgeon may wish to find spinal fluid or avoid other physiological structures. A fiber optic detector can be placed into the needle which can be part of a detection system that can identify biological tissues in contact with the needle opening.

In normal operation, the surface of the fiber optic waveguide sensor within a hollow needle can be roughly coplanar with the tip of the needle (such as, a Quincke needle). The fiber optic waveguide can be much smaller than the needle bore, allowing for injection of fluids, such as

medicaments, to flow past the fiber optic waveguide. In some modalities, the entire needle bore can be filled with the fiber optic waveguide. In these cases, the needle may retract or remove the fiber optic waveguide prior to the injection of fluids.

The removal of fiber optic waveguides can be done by hand by pulling the optical fiber waveguide into a Y-junction of guided syringe placement and delivery system until the fiber optic waveguide clears the needle bore. Hand removal of the optical fiber waveguide can be a significant operation by the surgeon or surgical staff at the precise point of injection, when movement of the needle tip is undesirable. Such a manual procedure also can require extra time for the whole procedure. Additionally, if a hard stop for fiber retraction is not included in the delivery system, it is possible for a leak to be created. However, this is unlikely based upon the approach of using a flexible polymer membrane similar to that used on a sealed medicine bottle or vial.

FIG. 1 is an illustration of one embodiment of a real-time impedance measuring needle system **100** (hereinafter referred to as the "system"). At the distal end of a hollow needle **104** (e.g., the end opposite the syringe), the tip of hollow needle **104** may include or attach to at least two conductors **102**. These conductors **102** may be connected through a connection point such as a flange (not illustrated) that may maintain an electrical connection with the at least two conductors **102**. When the needle tip is placed in a target location on the patient, the at least two conductors **102** can be in contact with biological tissue of the patient. A current may then run between the at least two conductors **102**. The sensed signal may then be transmitted further in the system. Hollow needle **104** may connect with a Y-Coupler **106**, which may branch in two different directions away from hollow needle **104**. A first branch, or arm **136**, may communicate an electrical signal via an electrical cable **110**. First branch, or arm **136** , may also communicate light signals optically via an optical fiber cable **112**. Hollow needle **136** may connect to a third branch, or arm **138**, of the Y-Coupler for delivering fluids to the biological tissue.

In first arm **136**, electrical cable **110** may connect with a computing device (not illustrated), such as an electro-optics module or device **118**. The connection may be wired or wireless between the Y-Coupler **106** and electro-optics device **118** through an electrical connector **116**. Electrical connector **116** may connect to electro-optics device **118**, which may include a signal converter **120** (such as an analog to digital or digital to analog) and, in some embodiments, a current source **122**. After signal converter **120**, the signal may be sent to a resistance output **130**. The output at resistance output **130** may be displayed or communicated as a number on an output display, a light, a sound, a notification, a hepatic, and combinations thereof, wherein each can indicate or be

based on the measured resistance of the biological tissue. There are many different embodiments that the output can be communicated as useful for the clinician.

In one embodiment, first arm **136** of the Y-Coupler **106** may also connect to an optical fiber cable **112**, which can carry information based on iron ion content gathered from the sensors on the tip of the optical fiber at hollow needle **104** tip. Optical fiber cable **112** can send the information to electro-optics device **118**. Optical fiber cable **112** can connect to electro-optics device **118** through fiber connector **114**. Electro-optics device **118** may have a splitter **124** that receives the information via fiber connector **114**. The biomarker information, such as iron ion content, may then be split by splitter **124** with a first signal that may be sent to a photo detector **126** and the other, second signal that may be sent to LED **128**. The photo detector **126** may then send biomarker information to an output display **132.** The biomarker content output may be displayed or communicated in a number of ways, such as a number displayed on an output display **132**, a light, a sound, a notification, a hepatic, and combinations thereof, wherein each can indicate or be based on the measured resistance of the biological tissue. There are many different embodiments that the output can be communicated as useful for the clinician.

When the output indicates that the user is in the wrong tissue or detects certain biological material or tissue that is not desired for delivery of the medical fluid, then the user may reposition the needle to a different location for further determination of a location for medical fluid delivery. When the user determines that the needle location is suitable for delivery, the user may deliver the medical fluid into the tissue that the needle has entered. In some embodiments, the delivery may be automated or computing device controlled when the delivery site is suitable for the medical fluid injection.

As described herein, the electro-optics device may have more than one embodiment. The two connections to the first arm are only one embodiment of many that can transfer the at least two types of information.

Y-Coupler **106** can have a second branch that splits off where first arm **136** begins and second branch or arm **134** connects to a syringe **108**. The connection of second arm **134** may create a continuous fluid channel (not illustrated) between syringe **108** and hollow needle **104** for delivery of medical fluids in syringe **108**. There are several embodiments of hollow needles that may be used in coordination with the Y-Coupler **106**, syringe **108**, and communication system (i.e., electrical cable **110**, optical fiber cable **112**, and other components connected thereto).

In the simplest embodiment disclosed herein, a spring can be employed with a trigger release to rapidly extract the fiber. This embodiment is illustrated in FIG. 1 and may incorporate

a spring for stored motive force. As shown, a trigger for release of the spring is provided as well as a polymer seal system to maintain sterile integrity and pressure in the system. When the trigger is engaged, the fiber optic waveguide (which can host the electrical cable **110**, the optical fiber cable **112**, or both) can be instantly extracted from the needle with minimal motion of the needle tip.

More specifically, a first embodiment of a hollow needle, such as hollow needle **200**, is illustrated in FIG. 2. The wall of hollow needle **200** may have layers. In an interior of hollow needle **200**, conductors **202** can be attached or integrally connected to the inner wall. Conductors **202** may run along hollow needle **200**. A layer of outer insulation **206** may be between conductors **202** and the inner wall of hollow needle **200** to help insulate the electrical signal. In some embodiments, and as illustrated in FIG. 2, the outer insulation **206** may be a coating or layer over the conductors **202** that extends the length of conductors **202**. In other embodiments, the outer insulation **206** may be a layer or lining of the needle to prevent the electrical signal from transferring to the hollow needle **200** and maintaining the electrical signal along conductors **202**, so the outer insulation **206** may be at least where the conductors are and between other metallic or conductive materials, such as hollow needle **200**. The outer insulation **206** may be outer side relative to the conductors (i.e., wrapped around the conductors) but inside of hollow needle **200**, lining the inner wall of hollow needle **200** at least where the conducts **202** are located. Such an insulation material may be made of polyimide or similar material, but other materials are possible for electrical signal insulation. In the illustration of FIG. 2, two conductors are present, but more can be added to the system. In the embodiment illustrated, at least two conductors are located at a needle tip **208** of hollow needle **200**, located at a distal end of the needle.

Optical fiber (not illustrated) may be a waveguide, which may moveably or slidably fit within the lumen of fluid channel and may further have an optical coupler. In some embodiments, optical fibers may have an insulting layer, such as inner insulating layer **204**, that runs along the conduction paths, so that the electrical signal is not impacted by any optical fibers that may be placed inside hollow needle **200**. In some embodiments, inner insulating layer may be on the inner side of conductors **202** and in other embodiments, inner insulating layer **204** may be part of an optical fiber outer coating or layer (not illustrated). In other embodiments, the at least two conductors may have inner insulating layer **204** on the conductors.

FIG. 3 is a similar view as FIG. 2 but is further detail of a hollow needle **300** with insulation layers. The layers may be from the inner wall of a hollow needle **300** and be layered to the outside layer, so that inner means closer to an inner wall and outer means closer to an outer wall. In one

embodiment, an inner conductor **310** may be present that senses or collects the electric signal, as described herein. An intermediate insulation **304** may be between inner conductor **310** and outer conductor **306**. In some embodiments, there may be an inner insulation **302** that is out the inner side of inner conductor **310** (not illustrated) or on the outer edge of an optical fiber (not illustrated). In some embodiments, as illustrated in FIG. 3, there may be an outer insulation layer **308** that is the outer most layer relative to the other components within needle **300**.

FIG. 4 is a cross-sectional view of a hollow needle **400**, as described herein. FIG. 4 shows a conductor **404** on the outer side of an insulation **402**. Insulation **402** may coat an optical fiber **406** with a core **408**. In some embodiments, optical fiber **406** (with core **408**) may be not be present in hollow needle **400**. In other embodiments, optical fiber **406** may have a coating on the outer edge, such as insulation **402**. Thus, insulation **402** may be a layer or coating on optical fiber **406**, or insulation **402** may coat the inner wall of hollow needle **400**. In some embodiments, FIG. 4 may be a cross sectional view of FIGs. 10 and 11 with two conductors on opposing sides on hollow needle **400**.

FIG. 5 illustrates a second embodiment of a hollow needle, wherein a tip of a hollow needle **500** has more than two conductors. In FIG. 5, there are four conductor **502a-d (**collectively**)**. Each of conductors **502a-d** may extend or connect to a respective conducting path **504a-d** that runs along hollow needle **500**. There may be a respective conducting path **504** to connect with each respective conductor **502**, such as conductor **502a** connecting to conducting path **504a**, **502b** connecting to conducting path **504b**, **502c** connecting to conducting path **504c**, and **502d** connecting to conducting path **504d**. In the embodiment of FIG. 8, metallization, electrodes, or conductions pads (**802** of FIG. 8) are located on an inner wall. The embodiment of FIG. 5 illustrates conduction paths extending from the conduction pads respectively along hollow needle **500**. The paths carry electrical signals to a computing device for signal analysis and resistance determination (see, e.g., FIG. 1). FIG. 5 is a cutout of hollow needle 500 (for the system, see FIG. 1 illustrating hollow needle **104**).

FIG. 6 illustrates a third embodiment of a hollow needle **600**, wherein four conductors **602a-d** are configured in an alternate pattern, different than FIG. 5. More specifically, in the embodiment of FIG. 6, conductors **602a-d** are staggered. The number notation "a-d" represents all the numbers in the sequence a, b, c, and d. In this instance, each of the respective conductors may extend along and parallel with hollow needle **600**. At least one conductor path **604a-d** may connect from conductors **602a-d** to a computing device (not illustrated) for electrical and optical signal communication. In this instance, conductor **602a** may connect to the computing device via

conductor path **604a**. Conductor **602b** may connect to the computing device via **604b**, a conductor **602c** may connect via a conductor path **604c**, and conductor **602d** may connect via conductor path **604d** respectively. In some embodiments, hollow needle **600** may have an angled bevel or opening. In this instance, conductors **602a-d** may appear staggered as they line the angled needle or needle bevel at the opening.

FIG. 7 illustrates a fourth embodiment of a hollow needle **700**, wherein the hollow needle **700** includes inner layers that contain a conductor **702**. In some embodiments, there may be an inner insulation layer **704**, between the conductor and optical fiber, for keeping the electrical signal on the correct path. Hollow needle **700** may be made of metal, such as stainless steel or other materials used in the needle arts. To keep the electrical signal from grounding or following a path other than conductive path, an outer insulation layer **706**, between conductor **702** and needle wall, may be present between the needle and the conductive path.

FIG. 8 is a cross sectional view of an inside of a hollow needle (not illustrated) as discussed herein. The diagram is an embodiment of a needle having four conductor resistance sensors **802a-d**, although in some cases less than four, such as at least two, sensors are needed. In the embodiment of FIG. 8, four-conductor resistance sensor(s) **802a-d** is illustrated showing the cross sectional view with at least four conductors **802a-d**. Conductors **802a-d**, may be a metal pad, or a metallization, located on or along the exterior of an inner wall of the hollow needle. A layer of insulation **806** may coat an outer wall of hollow needle. In some embodiments, a fiber **804** may be an optical fiber, which has an insulated coating or layer **806** on the outside. In some embodiments, metallization **802a-d** may be in the layer of insulation **806**, but in other embodiments, metallization **802a-d** may be at least partially exposed to make contact with biological tissue when the hollow needle is engaged with said biological tissue (not illustrated but herein described). In the embodiment of FIG. 8, metallization **802a-d** is flush with the exterior of inner wall. Thus, an object inside the lumen of hollow needle would not interfere with metallization **802a-d**. One such object may include an optical fiber **804**.

FIG. 9 illustrates one embodiment of an optical signal part of the system described herein (see FIG. 1). An optical fiber **904** may have a core **908** for transmitting light. Outside of core **908** may include an outer cladding **910** that reflects the light back into core **908**. A hollow needle **900** may include an insulation layer **912** which insulates the electrical signal and may prevent grounding through hollow needle **900**. Attached to an interior surface of insulation layer **904** may include at least one conductor **906**. FIG. 9 includes four conductors, which sense electrical signals from electrical sources (not illustrated) and are sent to a computing device (not illustrated). In

some examples, the outer wall of optical fiber **904** may be coated with an insulator or have a layer of insulation, such as insulation layer **912**, to protect the electrical signal from grounding when the electrical signal is sent to the computing device, as described herein (see e.g. FIG. 1). In some embodiments, optical fiber **904**may include a fiber cladding**910**, which may reflect light down core **908,** and core **908**. More specifically, at least a portion of optical fiber **904** end may be coated. The coating of the tip of optical fiber **904** may be an iron detection coating for causing a reaction when in contact with iron irons.

FIG. 10 illustrates another embodiment of the inside of a hollow needle (not illustrated). In the embodiment, two metallizations **1002** are illustrated on opposing sides of an optical fiber **1004**. Metallizations may be conductors or electrodes where electricity may enter the circuit. Other arrangements or placement of each of metallizations **1002** may be possible. An insulation layer **1006** may coat the outside of optical fiber **1004**, leaving each metallization **1002** at least partially exposed at the tip of a hollow needle (see, e.g., FIGS. 2 and 11) and a hollow inner portion of the hollow needle. The hollow interior may include optical fiber **1004**.

FIG. 11 is an illustration of a tip of a hollow needle **1100** that is another angle of a hollow needle of FIG. 10 and is similar to FIG.9, except with a two-conductor arrangement. In the embodiment of FIG. 11, optical fiber **1104** is seen in hollow needle **1100**. Two conductors **1102** are each seen on opposing sides of fiber **1104** and on a layer of insulation **1106**. Layer of insulation **1106** may encompass at least a portion of the conductors **1102**. In some embodiments conductors **1102** are at least partially exposed, and conductors **1102** may be exposed so that conductors **1102** contacts the biological tissue for getting an optical signal. A conductor (or pad) can be a metallization or conductive portion that transmits electrical signal or current through its conductive material.

FIG. 12 illustrates an embodiment of a four-conductor resistance sensor from FIG. 8. Conductors **1200**, similar to **802a-d** of FIG. 8, may be located at or next to an outer wall of optical fiber **1202**. In some embodiments, conductors **1200** may run along the fiber. Similar to FIGs. 5-6 and 8, there are four conductors illustrated, collectively referred to as "conductors **1200**". In FIG. 13, a conductive trace **1300** can extend along optical fiber **1302** (see, e.g., **1202**). To create a circuit or data continuous data path, an arm **1306** may be in contact with one of the conductors or conductive traces **1300** to create the signal path from conductor **1200** of FIG. 12 to an electronic or computing device (see electro-optics device **118** of FIG. 1) receiving the signals and data. Arm **1306** may be attached to the inner wall of a needle **1304** or other interior surface.

FIG. 14 is an illustration of one embodiment of the connection between the electrical and optical data to an electro-optics device **1410**. An optical fiber **1408** may have at least one conductor **1402** such as the four optical fiber conductors illustrated. Conductors **1402** are each connected to electrical connections **1404**. In some embodiments, the signals may transfer wirelessly, and in other embodiments, the signals may transfer via wired or optical connection, such as with an electrical interconnector **1406**. The optical data from optical fiber **1408** may be received by electro-optical device **1410** via an optical fiber connector **1414** and displayed as an output for the user to see or hear. There may be a fixed electronical or optical inter-connection to fiber conductors **1404**. The electrical data may be sent to and received by electro-optical device **1410** via an electrical connector **1412**, and electro-optics device **1410** may use couples and processors to measure the resistance and communicate a signal or resistance value. The output may be to an LCD display, or it may be a tone, light, or other indication that the user may read or interpret.

FIG. 15 illustrates an embodiment of an electrical component circuit that can calculate the resistance across the biological tissue. The resistivity of the tissue may be measured between the two electrodes on the probe tip located a significant distance away from the ohmmeter in the electro-optics module. Ohmmeter indicates $R_{wire+traces} + R_{tissue} + R_{wire+traces}$

$$R = R_{ref}[1 + \alpha(T - T_{ref})]$$

Where,

R = Conductor resistance at temperature "T"

R_{ref} = Conductor resistance at reference temperature T_{ref}, usually 20° C, but sometimes 0° C.

α = Temperature coefficient of resistance for the conductor material.

T = Conductor temperature in degrees Celcius.

T_{ref} = Reference temperature that α is specified at for the conductor material.

Different types of metals have different temperature coefficients. The resistance of the wires may change with temperature. This effect can be significant as room temperature changes. The generic formula for temperature effects on resistance is as follows (at 20 degrees Celsius):

Copper = 0.00393
Aluminum = 0.004308
Iron = 0.005866
Nickel = 0.005866
Gold = 0.003715
Tungsten = 0.004403
Silver = 0.003819

In one embodiment, two wires may be used with a constant current. Ohm's law defines resistance, "R", as the ratio of voltage "V" across a component, to the current "I" passing through it or R = V/I. To measure resistance, a test current may be applied to a wire and the voltage drop developed may be detected. From this, the resistance may be calculated.

Four-wire test methodology with constant current source

As illustrated in FIG. 15, a constant current source **1518** is provided in combination with the resistance loop (including $R1_{wire+traces}$ **1504**, $R2_{wire+traces}$ **1508,** R_{tissue} **1516**). FIG. 15 illustrates a constant current source **1518** applied and running in a constant current loop **1501** from a first electrode **1510** and a second electrode **1512**. First electrode **1510** and second electrode **1512** are placed on biomaterial or tissue **1514**. Tissue **1514** has a resistance R_{tissue} **1516** impacting current running between first electrode **1510** and second electrode **1512**. The measurement of the resistance R_{tissue} **1516** across the biomaterial or tissue **1514** is achieved by the electrical signal across $R1_{wire+traces}$ **1504** to one input of a voltmeter **1502** and running in a loop across $R2_{wire+traces}$ **1508** back to second electrode **1512**. The voltmeter is within an Ohmmeter **1500** and the reading across the voltmeter is the reading between the first electrode **1510** and second electrode **1512** and that is the resistance R_{tissue} **1516** of tissue **1514**. Ohmmeter **1500** may be contained in the electro-optic device of FIG. 1. The term "trace" or "trace impedance" may be generated from the circuit board components and the impede due to materials used.

In general, a 4-wire measurement may eliminate any effect of fixture resistance (the lead wires) to obtain a precise resistance value of the tissue resistance. Different tissues have different resistivity, and the following are some examples of biological tissue and the resistivity:

Tissues	S/m	Tissues	S/m
Cerebellum	0.10	pancreas	0.35
C.S.F.	2.00	prostate	0.40
Cornea	0.40	small intestine	0.50
Eye humor	1.50	spleen	0.10
Grey matter	0.10	stomach	0.50
Hypothalamus	0.08	stomach contents	0.35
Eye lens	0.25	tendon	0.30
Pineal body	0.08	testis	0.35
Pituitary	0.08	thyroid gland	0.50
Salivary gland	0.35	trachea	0.35

	Thalamus	0.08	urine	0.70
	Tongue	0.30	blood	0.70
	White matter	0.06	cortical bone	0.02
	Adrenals	0.35	bone marrow	0.06
5	Bladder	0.20	cartilage	0.18
	Large intestine	0.10	fat	0.04
	Duodenum	0.50	muscle	0.35
	Esophagus	0.50	nerve (spinal cord)	0.03
	Bile	1.40	skin	0.10
10	Gall bladder	0.20	tooth	0.02
	Heart	0.10	ligament	0.30
	Kidney	0.10	diaphragm	0.35
	Liver	0.07	seminal vesicle	0.35
	Lung	0.14	cavernous body	0.35
15	Large intestine		small intestine	
	Contents	0.35	contents	0.35

In the present invention, reading accuracy of R_{tissue}, may be improved by moving the voltage measurement points out to the endpoints of the mating pins. Thus, bypassing any voltage 20 drop that may occur in the lead wires. Because some embodiments use four lead wires instead of two, this approach is referred to as "4-wire measurement," or alternatively "4-Wire Kelvin."

In some embodiments, volt meter **1502** has very high impedance so the current flowing through the voltage-measuring circuit of a 4-wire system is extremely small, typically on the order of fractions of a microamp, so virtually no voltage drop occurs across these lead wires, and the 25 effect on the resistance measurement is negligible. In summary, if there is no current flowing through a wire, there may be no voltage drop across it. In one embodiment, a voltmeter may be an analog-to-digital convertor chip.

Two-wire test methodology with constant voltage source

In another embodiment, a constant voltage may be applied to the detection electrodes and the 30 current drawn would be measured. In this embodiment, the circuit is similar to FIG. 15, but constant current loop **1518** may not be present**.** Ohm's law defines resistance, "R", as the ratio of voltage "V" across a component, to the current "I" passing through it: $R = V_{ref}/I$. So the current draw will be: $I=V_{ref}/R$. The resistance is then equal to: R=Vref/I.

Four-terminal bulk resistivity measurement

In yet another embodiment, a four-probe method may be used that involves using four equally-spaced, co-linear probes (known as a four-point probe) to make electrical contact with the material. Other configurations are also suitable depending on geometrical space constraints. This electrical impedance measuring technique uses separate pairs of current-carrying and voltage-sensing electrodes to make more accurate measurements than the simpler and more usual two-terminal sensing. The current may be run between the two outer probes while the voltage sensing is done on the inner probes.

Separation of current and voltage electrodes eliminates the lead and contact resistance from the measurement. This is an advantage for precise measurement of low resistance values. Alternating current can also be used to measure the impedance of the tissue in the sensor. Furthermore, testing at different frequencies can provide even more information about the tissue under test.

Resistance R0 is the desired tissue resistivity measurement, R1 & R2 are the current loop contact resistances, R3 & R4 are the voltage loop contact resistances, R5 & R6 are the resistances between current and voltage loop contacts. Different configurations are possible for the resistance.

FIG. 16 illustrates a typical technique used for measuring bulk resistance in a four-probe method. In such a technique, there may be four equally-spaced, co-linear probes (known as a four-point probe) to make electrical contact with a material. Other embodiments may include additional configurations depending on geometrical space constraints. FIG. 16 illustrates a constant current source **1618** applied and running in a loop from a first electrode **1620**, a second electrode **1622**, a third electrode **1624**, and a fourth electrode **1626**. The voltmeter **1602** is within an Ohmmeter **1600**. Such electrical impedance measuring techniques can use separate pairs of current-carrying and voltage-sensing electrodes to make more accurate measurements than a simpler two-terminal sensing technique. In a preferred embodiment can include a current that may run between the two outer probes while the voltage sensing is done on the two inner probes. The separation of current and voltage electrodes can eliminate the lead and contact resistance from a resistance measurement. This can be advantageous for the precise measurement of low resistance values. Resistance R0 **1610** is the desired tissue resistivity measurement, R1 & R2 are the current loop contact resistances **1612a** and **1612b**; respectively. R3 & R4 are the voltage loop contact resistances **1614a** and **1614b**; respectively. R5 & R6 are the resistances between current and voltage loop contacts **1616a** and **1616b**; respectively.

Persons of ordinary skill in arts relevant to this disclosure and subject matter hereof will recognize that embodiments may comprise fewer features than illustrated in any individual embodiment described by example or otherwise contemplated herein. Embodiments described herein are not meant to be an exhaustive presentation of ways in which various features may be combined and/or arranged. Accordingly, the embodiments are not mutually exclusive combinations of features; rather, embodiments can comprise a combination of different individual features selected from different individual embodiments, as understood by persons of ordinary skill in the relevant arts. Moreover, elements described with respect to one embodiment can be implemented in other embodiments even when not described in such embodiments unless otherwise noted. Although a dependent claim may refer in the claims to a specific combination with one or more other claims, other embodiments can also include a combination of the dependent claim with the subject matter of each other dependent claim or a combination of one or more features with other dependent or independent claims. Such combinations are proposed herein unless stated that a specific combination is not intended. Furthermore, it is also intended to include features of a claim in any other independent claim, even if this claim is not directly made dependent on the independent claim.

CLAIMS

1. A real-time impedance measuring needle system comprising:

a hollow needle for administering medical fluids having a distal end, and a proximal end, which includes an opening configured to receive medical fluids through a fluid channel;

at least two conductors located on the distal end of the needle near the opening configured to deliver medical fluids; and

at least one detector configured to sense electrical current running between the at least two conductors through a biological tissue.

2. The real-time impedance measuring needle system according to claim 1, wherein an impedance measurement is based on at least one of voltage, current, or tissue properties, when electrical current runs through the biological tissue between the at least two conductors.

3. The real-time impedance measuring needle system according to claim 1, wherein the electrical current between the at least two conductors are one of constant current or alternating current.

4. The real-time impedance measuring needle system according to claim 1, wherein an indication of needle location is based on detection of the detector.

5. The real-time impedance measuring needle system according to claim 1, wherein a detector output is based on the biological tissue.

6. The real-time impedance measuring needle system according to claim 1, wherein the diameter of the hollow needle is wide enough to receive an optical fiber.

7. The real-time impedance measuring needle system according to claim 1, wherein the hollow needle has an inner wall with the at least two conductors that attached thereto or insulation between the at least two conductors and the hollow needle.

8. The real-time impedance measuring needle system according to claim 7, wherein the at least two conductors may extend along the inner wall forming a conducting path of the hollow needle from the distal end towards the proximal end, connecting to a computing device.

9. The real-time impedance measuring needle system according to claim 1, further comprises an insulator between the at least two conductors and the hollow needle.

10. The real-time impedance measuring needle system according to claim 1,
further comprising a notification system that sends a notification based on the sensed current of the at least two conductors.

11. The real-time impedance measuring needle system according to claim 1, further has insulation on the at least two conductors may contact, located on the opposite side of the at least two conductors from the hollow needle.

12. The real-time impedance measuring needle system according to claim 11,
wherein the inner insulation layer is at least partially made with polyimide.

13. The real-time impedance measuring needle system according to claim 1,
wherein the hollow needle has an inner conductor and an outer conductor.

14. The real-time impedance measuring needle system according to claim 1, wherein the detector contains at least one processor and a coupler.

15. The real-time impedance measuring needle system according to claim 1, wherein the biological tissue has a resistance associated with a material and the output is based on the sensed electrical current running through the resistance of the biological tissue.

16. The real-time impedance measuring needle system according to claim 1, wherein the hollow needle has a flange for contacting the conductor.

17. The real-time impedance measuring needle system according to claim 5, wherein the output is based on electrical current running between the at least two conductors through a biological tissue and a second output based on an optical signal.

18. The real-time impedance measuring needle system according to claim 1, wherein the at least one detector comprises a circuit board that includes one or more wireless interfaces.

19. A real-time impedance measuring needle system comprising:

A detector having at least one processor and a coupler;

a hollow needle for administering medical fluids having a distal end, and a proximal end, which includes an opening configured to receive medical fluids through a fluid channel, wherein the detector is in communication with the hollow needle;

at least two conductors disposed at an opening on the distal end of the needle and configured to deliver medical fluids; and

at least one detector configured to sense electrical current running between the at least two conductors through a biological tissue.

20. A method of measuring tissue in real-time with system comprising:

providing a hollow needle for administering medical fluids having a distal end, and a proximal end, which includes an opening configured to receive medical fluids through a fluid channel;

positioning at least two conductors located on the distal end of the needle near an opening configured to deliver medical fluids;

inserting the hollow needle into a biological tissue;

sensing, with at least one detector, electrical current running between the at least two conductors through a biological tissue;

generating an output based on the sensed current; and

repositioning the hollow needle in response to the output.

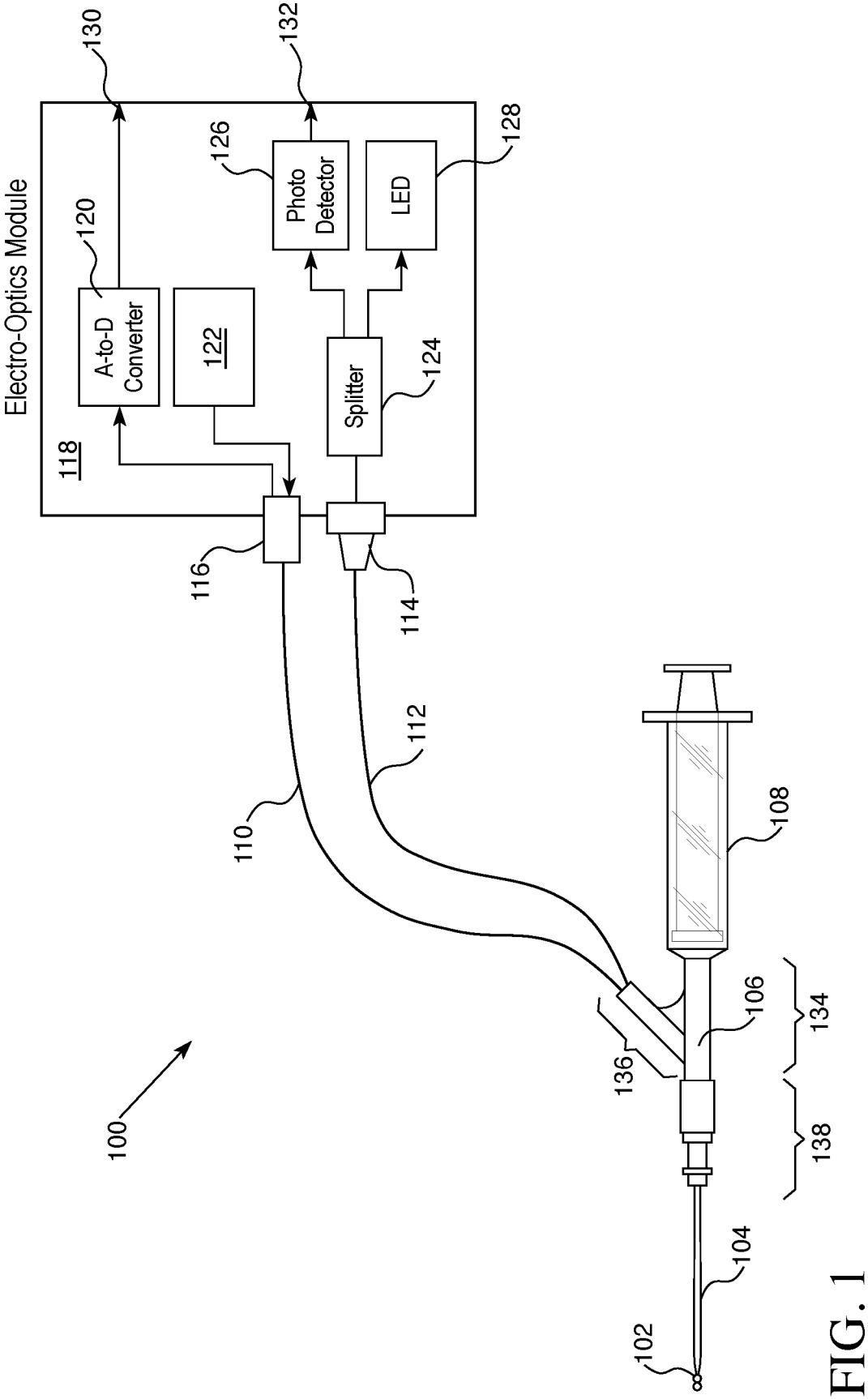
Electro-Optics Module
118
A-to-D Converter
120
122
Photo Detector
126
LED
128
Splitter
124
130
132
116
114
112
110
108
106
134
136
138
104
102
100

FIG. 1

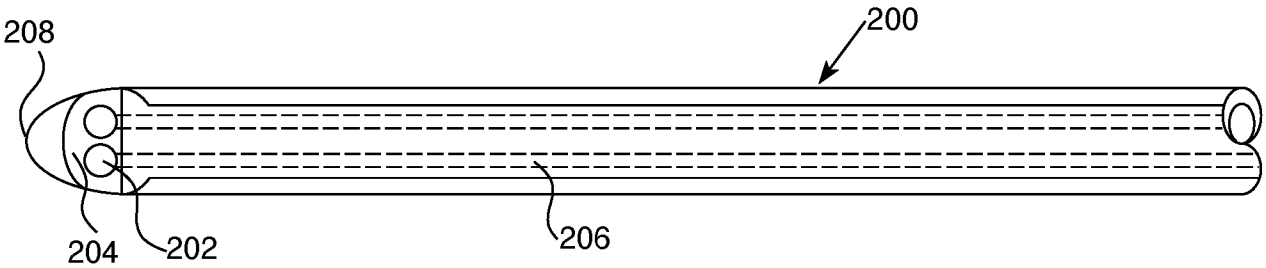

FIG. 2

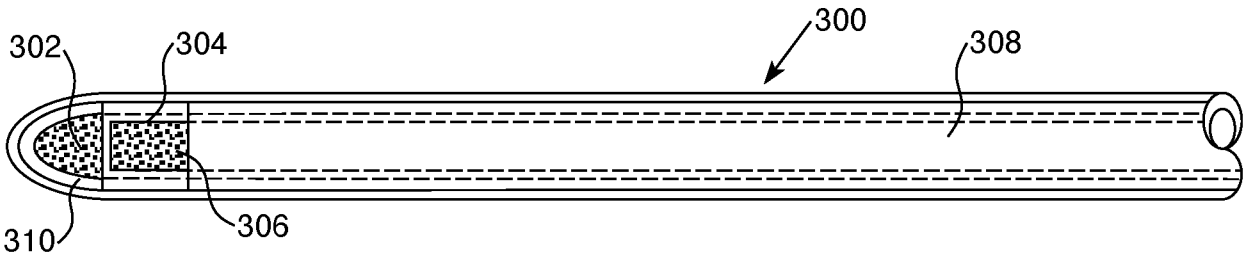

FIG. 3

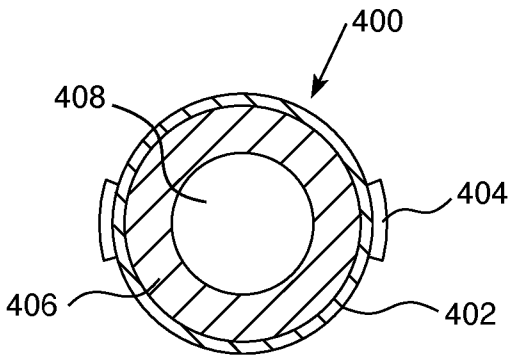

FIG. 4

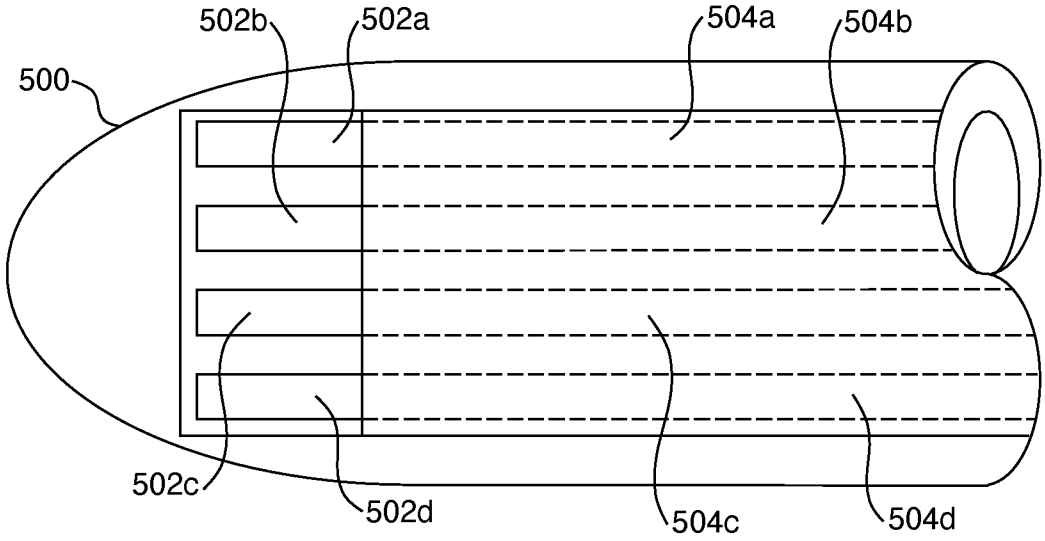

FIG. 5

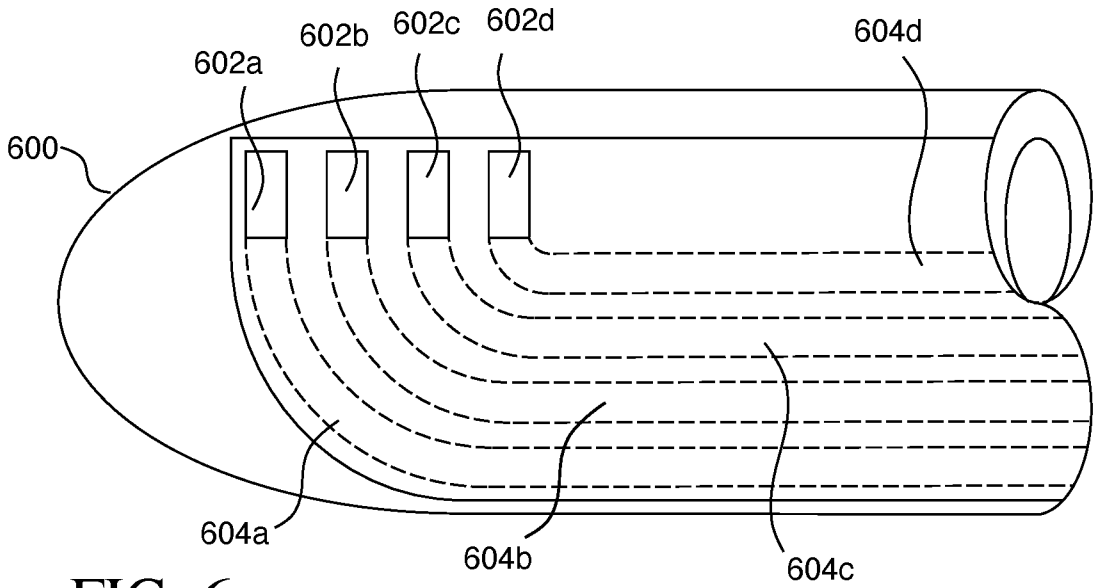

FIG. 6

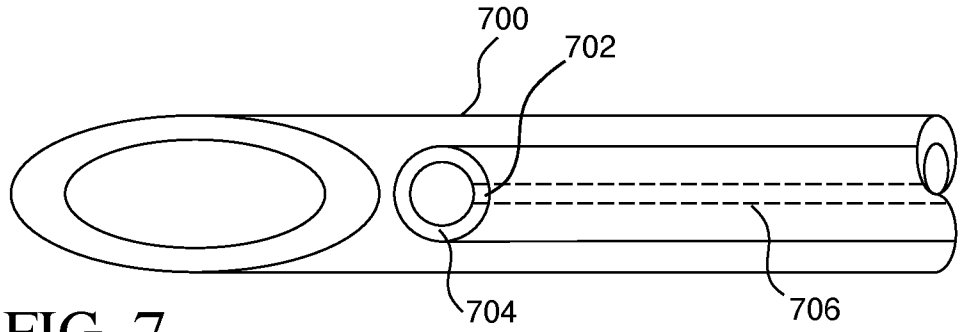

FIG. 7

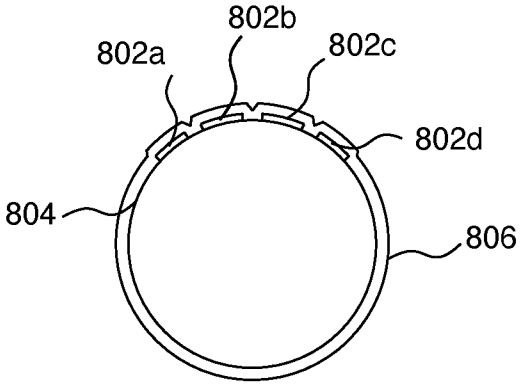

FIG. 8

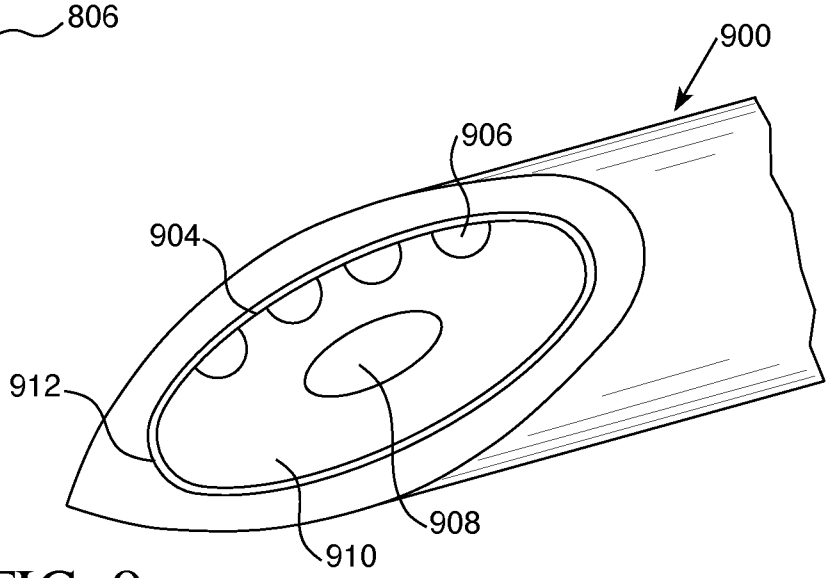

FIG. 9

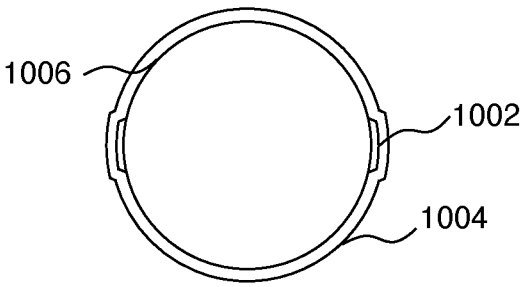

FIG. 10

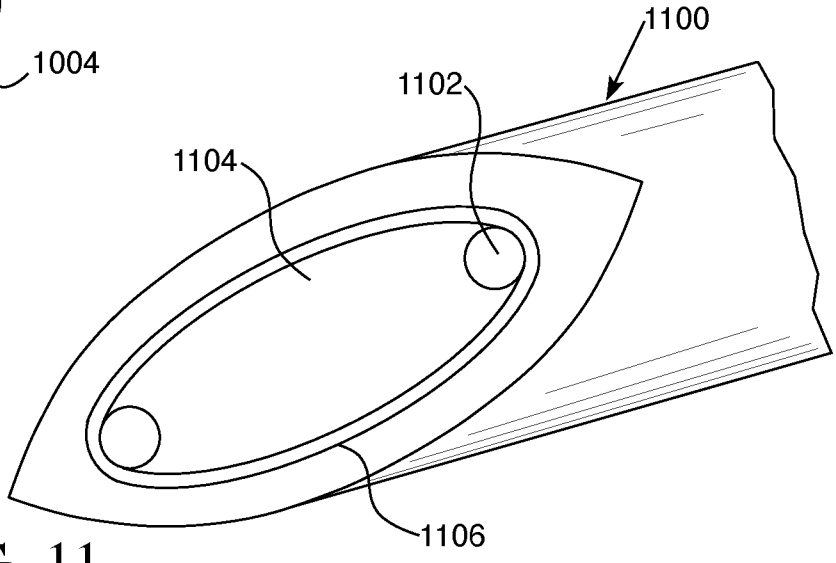

FIG. 11

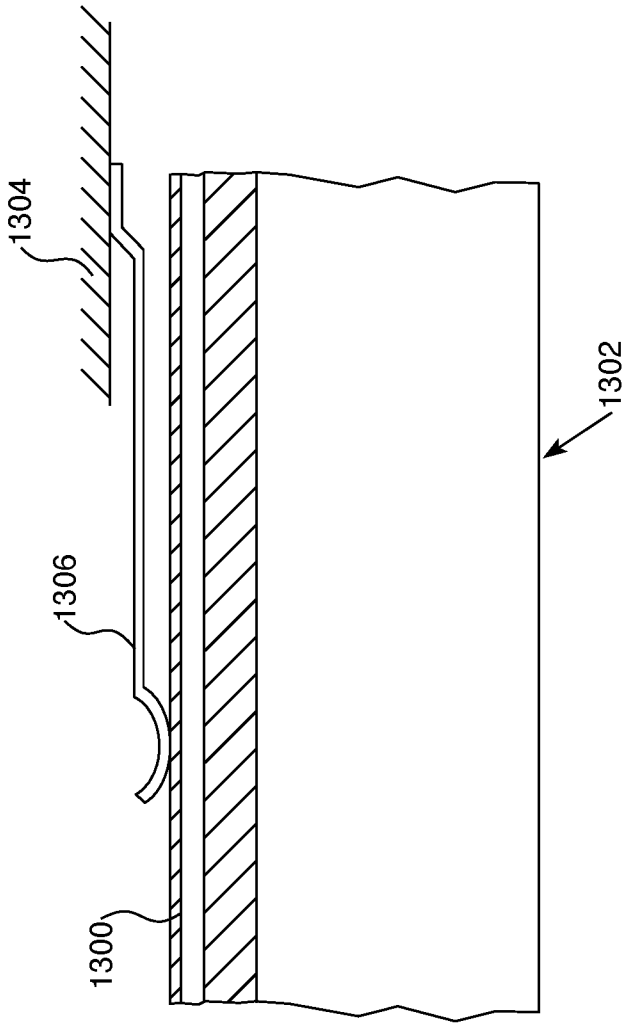

FIG. 13

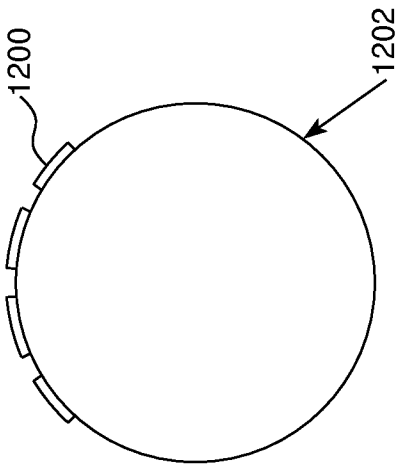

FIG. 12

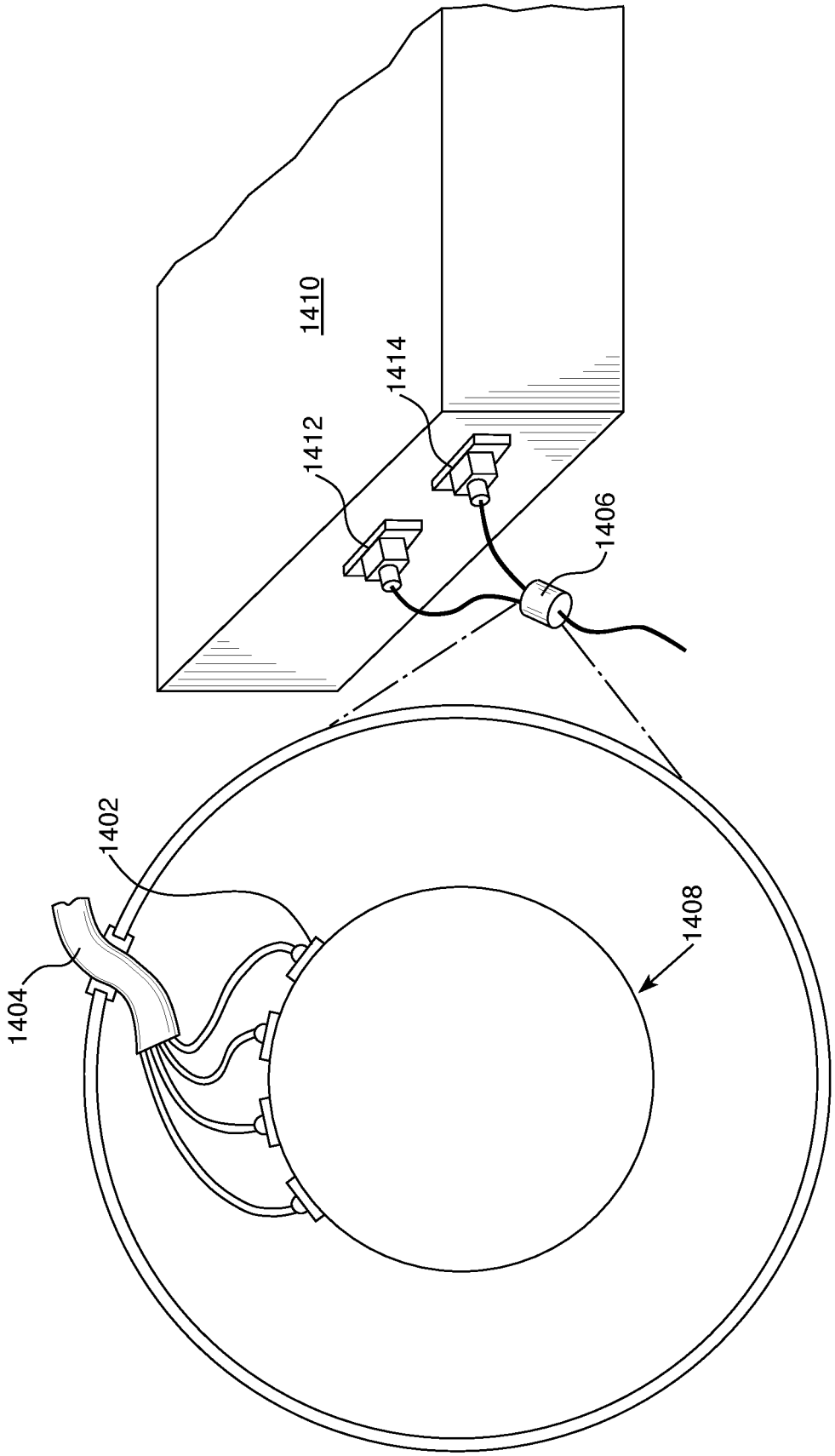

FIG. 14

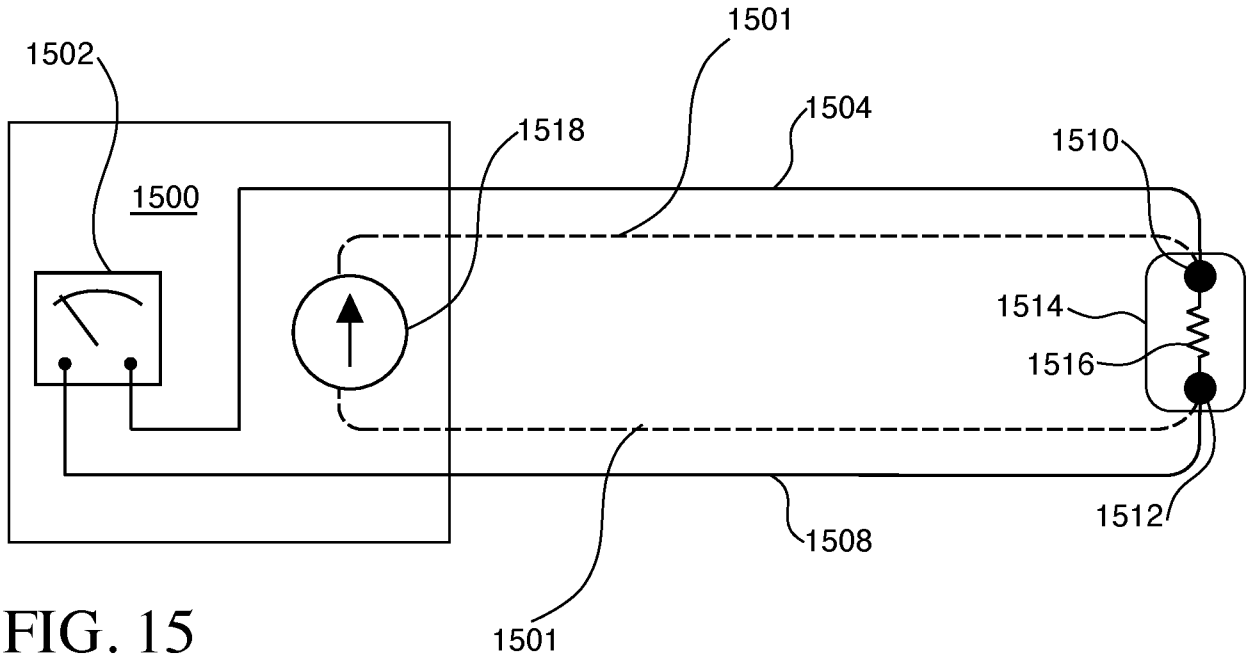

FIG. 15

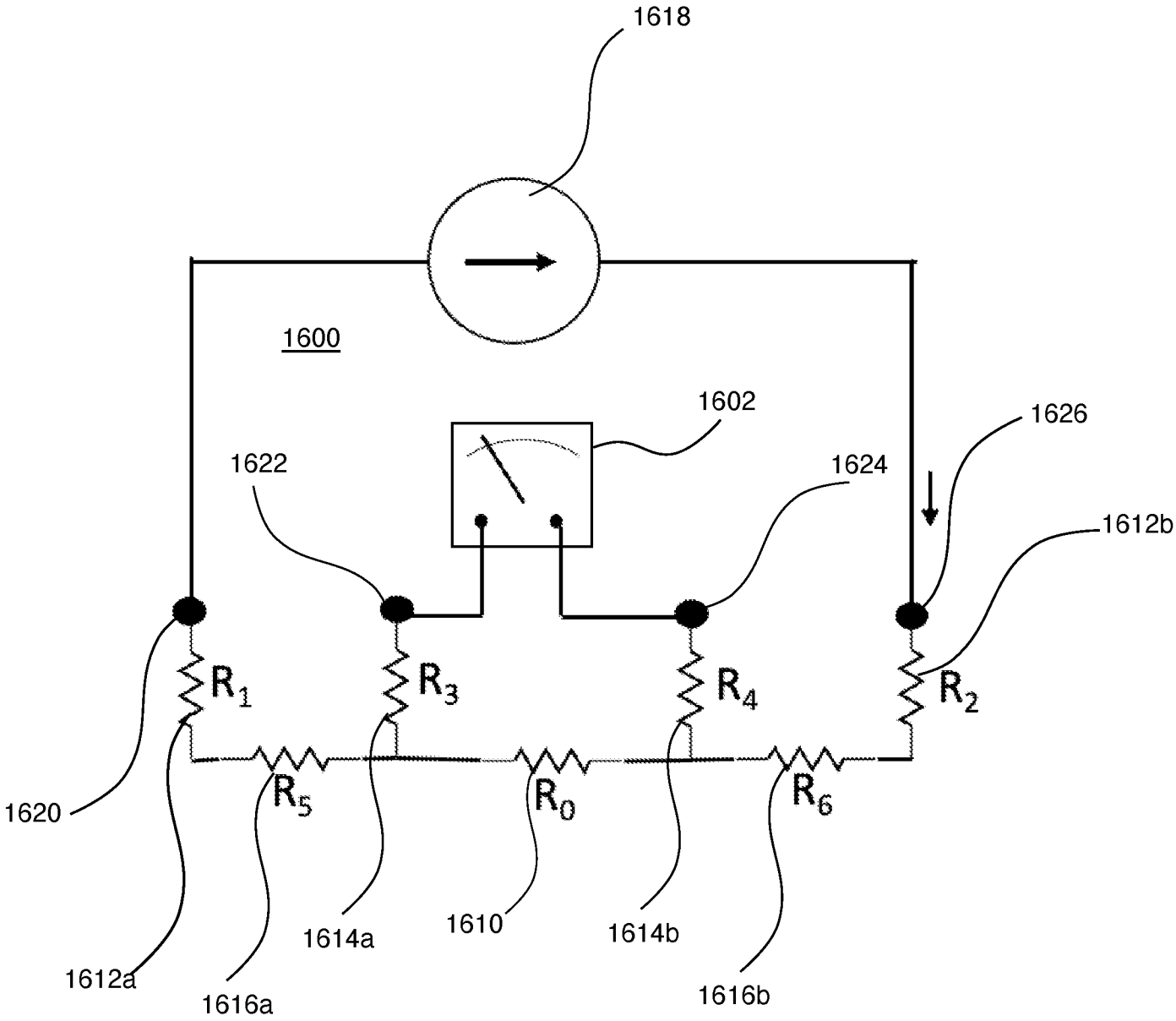
1618
1600
1602
1626
1622
1624
1612b
R_1
R_3
R_4
R_2
1620
R_5
R_0
R_6
1612a
1616a
1614a
1610
1614b
1616b

FIG. 16

INTERNATIONAL SEARCH REPORT

International application No.
PCT/US 22/30596

A. CLASSIFICATION OF SUBJECT MATTER

IPC - INV. A61B 5/0538, A61B 5/053 (2022.01)

CPC - INV. A61B 5/0538, A61B 5/053, A61B 5/6848, A61B 17/3403, A61B 8/4254

According to International Patent Classification (IPC) or to both national classification and IPC

B. FIELDS SEARCHED

Minimum documentation searched (classification system followed by classification symbols)
See Search History document

Documentation searched other than minimum documentation to the extent that such documents are included in the fields searched
See Search History document

Electronic data base consulted during the international search (name of data base and, where practicable, search terms used)
See Search History document

C. DOCUMENTS CONSIDERED TO BE RELEVANT

Category*	Citation of document, with indication, where appropriate, of the relevant passages	Relevant to claim No.
X -- Y	US 2002/0183582 A1 (GREEN et al.); 5 December 2002 (05.12.2002); entire document, especially Figs. 3-5A; para. [0036]-[0045], [0052].	1-2, 4-5, 7, 9-10, 13-16, 19 ---------- -
X	US 2015/0359991 A1 (EZONO AG); 17 December 2015 (17.12.2015); entire document, especially Abstract; Figs. 1, 2B, 2D; para. [0042], [0045], [0048]-[0049], [0087].	17 1, 3, 6, 20
X	US 5,078,714 A (KATIMS); 7 January 1992 (07.01.1992); entire document, especially Fig. 3; Abstract; col. 5, ln 18-59; col. 7, ln 10-13; col. 8, ln 64-col. 9, ln 24; col. 11, ln 8-13	1, 7-8
X	US 2020/0289021 A1 (BLOSSOM INNOVATIONS); 17 September 2020 (17.09.2020); entire document, especially Abstract; Fig. 1A, para. [0069]-[0070], [0087]-[0088].	1, 11-12, 18
Y	US 2008/0306391 A1 (HULAR et al); 11 December 2008 (11.12.2008); entire document, especially Abstract, para. [0051], [0096].	17
A	US 2010/0286507 A1 (PAASSILTA et al.); 11 November 2010 (11.11.2010); entire document.	1-20
A	US 2021/0001042 A1 (BECTON, DICKINSON AND COMPANY); 7 January 2021 (07.01.2021); entire document.	1-20

☐ Further documents are listed in the continuation of Box C. ☐ See patent family annex.

* Special categories of cited documents:
"A" document defining the general state of the art which is not considered to be of particular relevance
"D" document cited by the applicant in the international application
"E" earlier application or patent but published on or after the international filing date
"L" document which may throw doubts on priority claim(s) or which is cited to establish the publication date of another citation or other special reason (as specified)
"O" document referring to an oral disclosure, use, exhibition or other means
"P" document published prior to the international filing date but later than the priority date claimed
"T" later document published after the international filing date or priority date and not in conflict with the application but cited to understand the principle or theory underlying the invention
"X" document of particular relevance; the claimed invention cannot be considered novel or cannot be considered to involve an inventive step when the document is taken alone
"Y" document of particular relevance; the claimed invention cannot be considered to involve an inventive step when the document is combined with one or more other such documents, such combination being obvious to a person skilled in the art
"&" document member of the same patent family

Date of the actual completion of the international search	Date of mailing of the international search report
7 July 2022	AUG 16 2022
Name and mailing address of the ISA/US Mail Stop PCT, Attn: ISA/US, Commissioner for Patents P.O. Box 1450, Alexandria, Virginia 22313-1450 Facsimile No. 571-273-8300	Authorized officer Kari Rodriquez Telephone No. PCT Helpdesk: 571-272-4300