May 16, 1939. F. H. McCORMICK 2,158,881

RANGE

Filed May 7, 1935 2 Sheets-Sheet 1

Fig. 1.

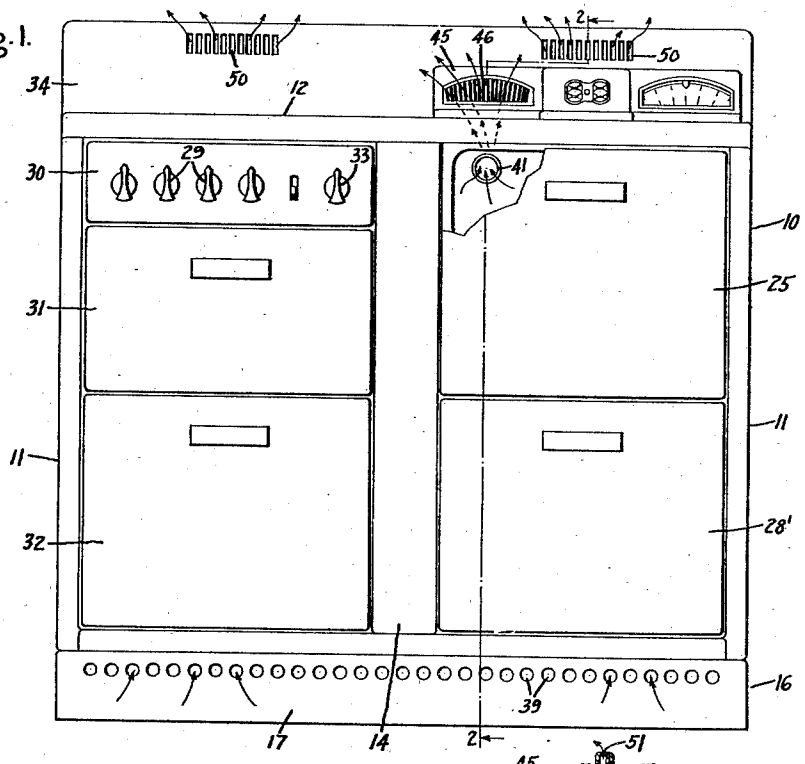

Fig. 2.

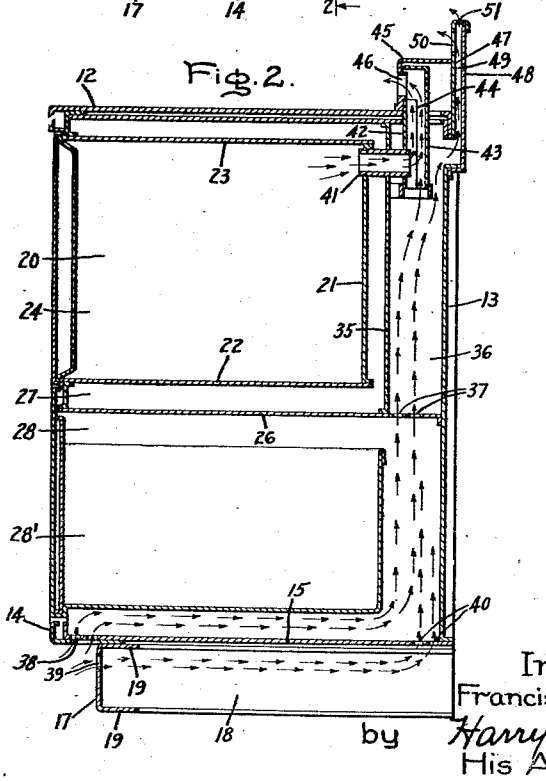

Inventor:
Francis H. McCormick,
by Harry E. Dunham
His Attorney.

May 16, 1939. F. H. McCORMICK 2,158,881

RANGE

Filed May 7, 1935 2 Sheets-Sheet 2

Fig. 3.

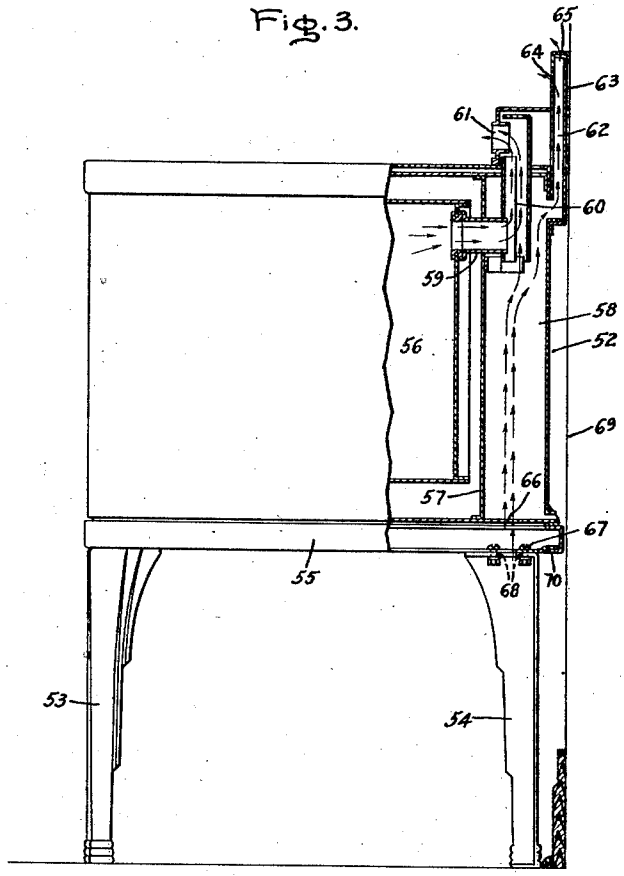

Inventor:
Francis H. McCormick,
by Harry E. Dunham
His Attorney.

Patented May 16, 1939 2,158,881

UNITED STATES PATENT OFFICE

2,158,881

RANGE

Francis H. McCormick, Glen Ellyn, Ill., assignor to Edison General Electric Appliance Company, Chicago, Ill., a corporation of New York

Application May 7, 1935, Serial No. 20,145

9 Claims. (Cl. 126—39)

This invention relates to ranges, more particularly to electric ranges, and it has for its object the provision of an improved device of this character.

In modern kitchens, it is desirable that the various elements constituting the kitchen equipment, such as the refrigerator, the range, dishwasher, storage cabinets, water heater, etc. have the same general appearance, and that they be positioned adjacent each other and as close to the walls of the kitchen as is possible. Most of this equipment, such as the refrigerator, the cabinets and the dishwasher, may be fitted flush against the walls of the kitchen, but in the case of the range it has been the practice heretofore to space it 3" or 4" from the kitchen wall to provide for, among other things, oven vent openings and also for the circulation of ventilating air over the rear surfaces of the range to thermally insulate it from the wall.

It is an object of this invention to provide an improved range having a ventilating flue within the range structure arranged to ventilate the range so that its rear surfaces are maintained sufficiently cool to permit them to be fitted flat against the kitchen wall.

In accordance with this invention, the range in one form thereof comprises a substantially rectangular cabinet within which is arranged an oven having its rear wall spaced from the rear wall of the cabinet. Within this space there is provided a ventilating flue having an opening at its lower end providing for the admission of cooling air and an opening at its upper end providing for the discharge of the air. Also the oven communicates with a flue so that hot air and vapors in the oven can flow directly into the flue and upwardly therein. Preferably, the discharge openings of the cooling and oven ventilating flues will face forward of the range from the rear wall thereof so as to prevent the vapors and air from contacting the wall of the kitchen. This obviates the possibility of staining the wall.

For a more complete understanding of this invention, reference should be had to the accompanying drawings in which Fig. 1 is a front elevation of an electric range embodying this invention, parts of the range being broken away so as to illustrate certain structural details; Fig. 2 is a vertical sectional view taken through the line 2—2 of Fig. 1 and looking in the direction of the arrows; and Fig. 3 is a side elevation illustrating an electric range of modified form arranged in accordance with this invention, parts of the range being shown in section so as to illustrate certain details of construction.

Referring more particularly to Figs. 1 and 2 of the drawings, this invention has been shown as applied to an electric range, although it is to be understood that it is applicable also to gas and oil ranges, etc. As shown in Figs. 1 and 2, the range comprises a substantially rectangular cabinet 10 defined by end walls 11, a top wall 12, a rear wall 13, a front wall 14 and a bottom wall 15. The cabinet 10 is supported by a base 16. The base 16 has a front wall 17 and a pair of side walls 18. The upper and lower ends of these walls are provided with inturned substantially parallel flanges 19.

Within the right-hand side of the cabinet is an oven 20. The oven 20 is defined by a plurality of walls—a rear wall 21, a bottom wall 22, a top wall 23, and end walls 24. The oven is closed at the front by a door 25. The top wall of the oven is spaced somewhat from the top wall 12 of the cabinet, as shown.

Positioned below the oven in spaced relation with it is a wall 26 dividing the cabinet into upper and lower chambers 27 and 28, the oven 20 being positioned within the upper chamber 27. Within the lower chamber is a storage drawer 28'.

The left-hand side of the upper wall 12 defines an area for receiving a plurality of surface heating units (not shown) which are controlled by means of switches 29 arranged on a panel 30. Below the switch panel are a pair of storage drawers 31 and 32. It will be understood that the oven 20 will be provided with suitable heating elements (not shown) which are controlled by means of a suitable control switch 33 on the switch panel.

Extending across the range at the rear above the top wall is a back splasher 34.

In the rear of the cabinet extending crosswise thereof there is a wall 35 spaced from the rear wall 21 of the oven 20, as shown in Fig. 2. The wall 35 is also spaced from the rear wall of the cabinet 13. Within the space between the rear wall 21 of the oven and the wall 35 and also within the spaces between the top walls 12 and 23 and between the bottom wall 22 and wall 26 there is provided a suitable heat insulating material, such as rock wool. Insulation (not shown) is also provided for the end walls of the oven.

The space between the rear wall of the cabinet 13 and the wall 35 defines a flue 36 which extends crosswise of the range substantially through its full length and vertically from the wall 26 to the top wall 12 of the cabinet. At

the bottom of the flue 36 within the wall 26 there are provided a plurality of openings 37 providing for the admission of cool ventilating air into the flue.

The ventilating air supplied to the flue is admitted to the lower portion of the cabinet. The front wall 17 of the base 16, as shown, is spaced to the rear of the front wall 14 of the cabinet, so as to provide toe space for the attendant at the front of the range. The bottom wall 15 of the cabinet and the front wall of the base are provided with openings 38 and 39, respectively, through which the ventilating air can flow into the base and cabinet. The ventilating air entering the openings 38 flows freely into the bottom chamber 28 of the cabinet to the openings 37. The air entering the front wall 17 of the base through the openings 39 enters the bottom wall of the cabinet at the rear through a plurality of openings 40.

The oven 20 communicates with the flue 36 at its upper end to provide for the ventilation of the oven. As shown, a conduit 41 connects the upper portion of the oven with the ventilating flue 36. Built into the upper end of the flue are a plurality of walls 42 and 43 defining a conduit 44 through which the vapors and gases from the oven are directed upwardly to a point above the top wall 12 of the range. On the top wall 12 of the range, there is provided a discharge duct 45 with which the conduit 44 communicates. This duct 45 is provided with a discharge opening 46 directed forwardly across the top of the range.

The bottom of the conduit 44, as shown in Fig. 2, communicates directly with the ventilating flue 36 so that a portion of the air which flows up through the flue enters the conduit 44 where it mixes with and dilutes the hot air and vapors passing into this conduit from the oven, the mixed air and gases passing out forwardly of the range through the discharge opening 46.

The back splasher 34, as shown, is provided with a pair of spaced front and rear walls 47 and 48 (Fig. 2) which define a relatively narrow passageway 49 that extends substantially through the width of the back splasher. Spaced apart at the top of the front wall 47 of the back splasher are a pair of openings 50 to provide for the discharge of the ventilating air that is directed upwardly into the passageway 49. If desired, auxiliary openings 51 may be provided in the top wall of the back splasher just above the openings 50 in its front wall.

It is to be understood that the heat dissipated through the rear walls of the oven and also from the under side of the surface units heats the air in the flue 36 and causes a "chimney effect" flow of air through the ventilating flue. Also, the flow of hot air and vapors from the oven into the ventilating conduit assists in inducing a draft in the flue to cause ventilating air to flow through it. The air flowing in the flue 36 at its upper end divides a portion of the air flowing directly up through the conduit 44 where it commingles with the hot air and vapors flowing from the oven 20, while the remainder flows up through the conduit 49 arranged in the back splasher. The first portion, which mingles with the hot air and vapors flows out through the discharge opening 46 forwardly of the range, while the latter portion flows through the discharge openings 50 and 51.

In view of this action of the ventilating air, the oven is thermally insulated from the rear wall 13 of the range, whereby the temperature of the rear wall is maintained so low that the wall can be placed substantially flush with the wall of a kitchen without danger of overheating the kitchen wall. The ventilating flue 45 which carries the hot air and vapors from the oven is thermally insulated from the rear wall of the cabinet by the auxiliary flue 49 arranged in the back splasher. Moreover, the ventilating flue 49 in the back splasher completely thermally insulates the heat generated in the top wall 12 by the surface units from the rear wall of the cabinet.

In Fig. 3 there is illustrated a modified form of range embodying this invention. In this case, the range is provided with a rectangular cabinet 52 which is supported in an elevated position upon a plurality of legs 53 and 54 at the front and rear of the cabinet 52. The cabinet 52 rests on a base 55 to which the legs are attached.

Within the cabinet 52 there is provided an oven 56 on one side and with surface units (not shown) arranged on the other side of the top wall of the cabinet. In this case, as before, there is a vertical wall 57 which is spaced from the rear wall of the cabinet, and also spaced from the rear wall of the oven to provide for an insulating medium. The side, top, bottom and back walls of the oven are covered with insulating material.

The space between the walls 52 and 57 define a ventilating flue 58 similar to the ventilating flue 36 of the first form. The arrangement of the flue 58 in connection with the oven and the discharge openings is substantially the same as the first form of this invention. Thus, the oven 56 is connected with the ventilating flue by means of a conduit 59. This conduit communicates with a conduit 60 which discharges forwardly of the oven through an opening 61. Arranged back of the conduit 61, there is a second conduit 62 provided in the back splasher 63 of the range. This conduit discharges through openings 64 and 65 in the front and top walls of the back splasher.

The ventilating air for the flue 58 enters the bottom of the flue through openings 66 provided in the bottom wall of the cabinet.

The ventilating air that enters the flue 58 divides at the top,—a portion entering the flue 60 where it commingles with the hot air and vapors passing from the oven, while the second portion enters the flue 62. These respective portions are discharged from the flues through the openings 61 and 64 and 65.

It will be observed that the legs 54 at the rear are mechanically connected to the base 55 of the cabinet by means of detachable screw fastening means 67. The base is provided with openings or apertures 68 receiving the fastening means and so positioned that when the rear legs are attached, as shown, the rear wall of the back splasher and that of the cabinet will be substantially flat against the rear wall 69 of the kitchen. If it is desired to space the range from the rear wall of the kitchen, as has been the practice heretofore, the detachable screw fastening means 67 are removed and the legs 68 adjusted to the rear of their position shown in Fig. 3 so that the rear screw fastening means 67 in this case pass through apertures 70 provided for them in the base of the cabinet, while the forward screw fastening means pass through the apertures 68 in which the rear screw fastening means are directed as in Fig. 3. In other words, the rear legs 54 are adjustable so that the range can be fitted against the wall of a kitchen or can be spaced therefrom, as desired.

While I have shown particular embodiments of my invention, it will be understood, of course,

that I do not wish to be limited thereto since many modifications may be made, and I, therefore, contemplate by the appended claims to cover any such modifications as fall within the true spirit and scope of my invention.

What I claim as new and desire to secure by Letters Patent of the United States, is:

1. A range comprising walls defining a substantially rectangular cabinet, walls within said cabinet forming a heating chamber spaced from the rear wall of said cabinet, a vertical flue within said space extending substantially through the width of said heating chamber, a conduit connecting the upper portion of said heating chamber with said flue so that vapors and hot air in said chamber can flow directly into said flue, said flue having an opening in the lower portion thereof through which air flows into said flue upwardly therein to the upper portion thereof, the flow of air in said flue thermally insulating said heating chamber from the rear wall of said cabinet so that the temperature of said wall is maintained sufficiently low to permit said wall to be presented flush with the wall of a room, a conduit in the upper portion of said flue diverting a portion of the air flowing in said flue into the path of the hot air and vapors issuing from said heating chamber, where the air mixes with said hot air and vapors, said conduit means having a discharge outlet opening toward the front of said range, and a second conduit in the upper portion of said flue arranged to direct the remainder of the air flowing in said flue upwardly back of said first flue to thermally insulate it from the back wall of said cabinet, said last named conduit having a discharge outlet for said air opening above the discharge outlet of said first conduit.

2. A range comprising walls defining a substantially rectangular cabinet, walls defining an oven within said cabinet spaced from the rear wall thereof, a flue within said space having openings in its upper and lower ends, those in the lower end opening into the lower portion of said cabinet, a storage drawer within said lower portion below said oven and movable through the front wall of said cabinet, and a base for said cabinet arranged with its front wall spaced to the rear of the front wall of said cabinet to provide toe space for an attendant at the front of said range, the lower wall of said cabinet above said toe space having openings therein through which said air can flow into said cabinet and thence to the lower opening in said flue.

3. A range comprising walls defining a substantially rectangular cabinet, walls defining an oven within said cabinet spaced from the rear wall thereof, a flue within said space having openings in the upper and lower ends thereof, the opening in the lower end opening into the lower portion of said cabinet and the opening at the upper end opening to the front of said range, a conduit between said oven and the upper portion of said flue, a substantially rectangular base for said cabinet arranged with its front wall spaced to the rear of the front wall of said cabinet to provide toe space for an attendant at the front of said range, the lower wall of said cabinet above said toe space having openings therein providing for the flow of air into the lower portion of said cabinet and the front wall of said base and the upper wall thereof having openings therein, the openings in said upper wall communicating with openings in the rear of the bottom wall of said cabinet, said openings in said base and said openings at the rear of said bottom wall constituting auxiliary means for supplying air to said bottom portion of said cabinet.

4. A range comprising walls defining a cabinet, walls forming an oven within one side of said cabinet and spaced from the rear wall thereof, the top wall of said cabinet providing a surface heating unit area at one side of said oven, walls defining a back splasher at the rear of said top wall, and a flue within said space between said oven and said rear wall of said cabinet extending substantially through the complete width of said range and from the bottom of said oven to the top of said back splasher, the front and top walls of said back splasher being provided with spaced discharge openings communicating with said flue, and said flue being provided with air intake openings at the bottom, means connecting the upper portion of said oven with said flue, and means directing hot air and vapors from said oven flowing into said flue through a discharge opening provided for them in the front wall of said back splasher separate from said first named discharge openings, and for directing a portion of the air in said flue into the path of said hot air and vapors where it commingles with and dilutes said hot air and vapors.

5. A range comprising walls defining an oven having a front opening, a door closing said opening, walls forming a cabinet enclosing said oven, a flue arranged vertically of said oven at the rear thereof connected with the upper portion of said oven, into which hot air and vapors in said oven can flow into the upper portion of said flue, said flue being provided with an opening in the lower portion thereof through which cooling air can flow into said flue and upwardly therein where it mixes with the hot air and vapors entering said flue from said oven at the top of said flue, the hot oven gases flowing into the top of the flue constituting draft inducing means to cause the cooling air to flow through said flue, and discharge means at the upper end of said flue directing the discharge of said mixed air and vapors from said flue forwardly of said range from the rear wall of said cabinet.

6. A range comprising walls defining a cabinet, walls forming an oven within one side of said cabinet and spaced from the rear wall thereof, the top wall of said cabinet providing a surface heating unit area at one side of said oven, walls defining a back splasher at the rear of said top wall, a flue at the rear of said oven extending from the bottom of said oven to the top of said back splasher, the front of said back splasher being provided with a discharge opening communicating with said flue, and said flue being provided with an air intake opening at the bottom, means connecting the upper portion of said oven with said flue, and means directing hot air and vapors from said oven flowing into said flue through a discharge opening provided for them in the front wall of said back splasher separate from said first named discharge opening, and for directing a portion of the air in said flue into the path of said hot air and vapors where it commingles with and dilutes said hot air and vapors.

7. A range comprising an oven, walls forming a cabinet enclosing said oven and defining a flue back of said oven between its rear wall and the back wall of said cabinet, the flue extending from the bottom to the top of said oven and from one side to the other thereof, and the flue having openings in its top and bottom, a conduit be-

tween the oven and said flue so that hot air and vapors in the oven flow into the flue to induce a draft in the flue to cause cooling air to flow upwardly through the flue, the oven being substantially closed to the circulation of air therethrough except for said conduit connecting it with said flue, and the cooling air maintaining the rear wall of the cabinet sufficiently cool to permit it to be placed directly against the wall of a room.

8. A range comprising walls defining a cabinet, walls forming an oven within said cabinet spaced from the rear wall thereof, a flue within said space back of said oven having openings in its upper and lower ends through which cooling air can flow to thermally insulate the oven, the opening in the lower end opening into the lower portion of the cabinet, a base for said cabinet arranged with its front wall spaced to the rear of the front wall of said cabinet to provide toe space for an attendant at the front of the range, the lower wall of said cabinet defining the top of said toe space having an opening therein through which air from the toe space can flow into said cabinet and thence to the lower opening in said flue, and the oven connected with said flue so that hot air and vapors in the oven can flow into the flue to induce a draft for the cooling air.

9. A range comprising walls defining a cabinet, walls forming an oven within said cabinet and spaced from the rear wall thereof, the top wall of said cabinet providing a surface heating unit area at the side of said oven, walls defining a back splasher at the rear of said top wall extending from one end thereof to the other, and a flue at the rear of said cabinet below said back splasher extending substantially through the complete width of said range and upwardly from the bottom of said oven to said back splasher, said flue having an air intake at the bottom and discharging at the top, and said back splasher being provided with discharge openings directed forwardly of the range and communicating with said discharge of said flue, and a duct connecting the top of said oven with the top of the flue so that hot air and vapors can flow from the oven into the top of the flue to induce a flow of cooling air through the flue.

FRANCIS H. McCORMICK.