Nov. 9, 1954 A. J. MOORE ET AL 2,693,842

EVAPORATOR FORMING MACHINE

Filed Sept. 16, 1947 4 Sheets-Sheet 1

Fig. 2

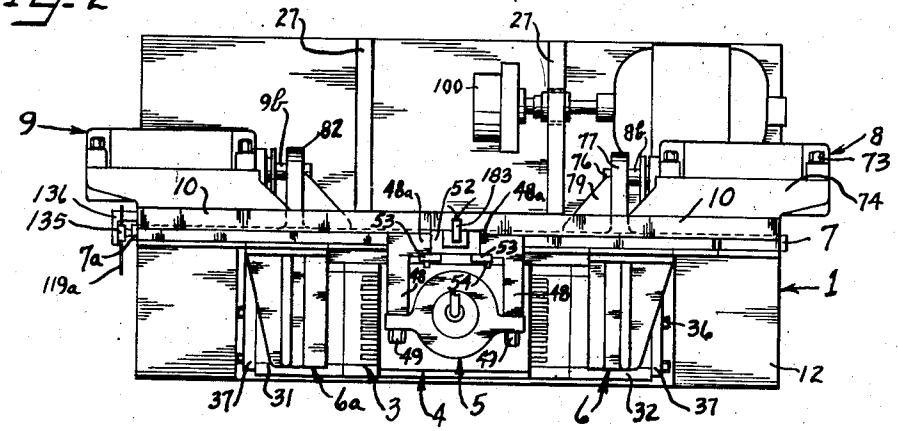

Fig. 1

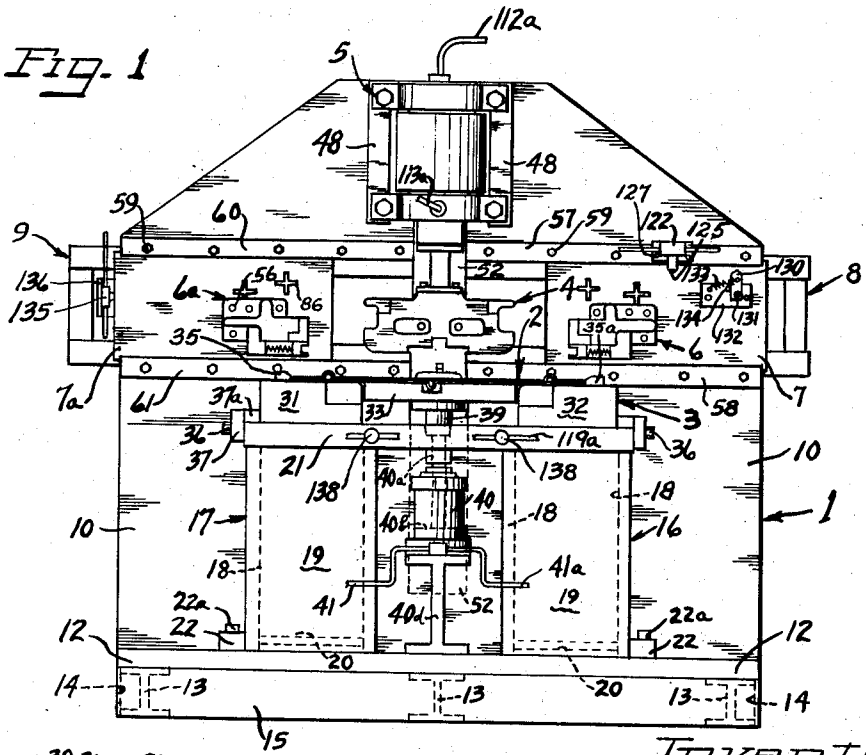

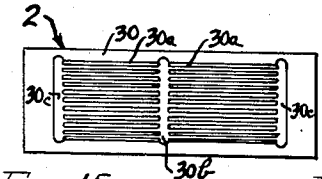

Fig. 15

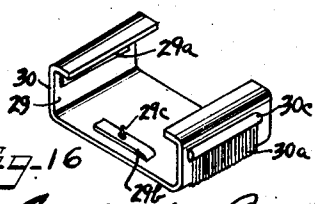

Fig. 16

Inventors

Arthur J. Moore

Marion D. Hopkins

Aage B. Johnson

by The Firm of Charles W. Hill Attys.

Nov. 9, 1954 A. J. MOORE ET AL 2,693,842

EVAPORATOR FORMING MACHINE

Filed Sept. 16, 1947 4 Sheets-Sheet 2

Fig. 3

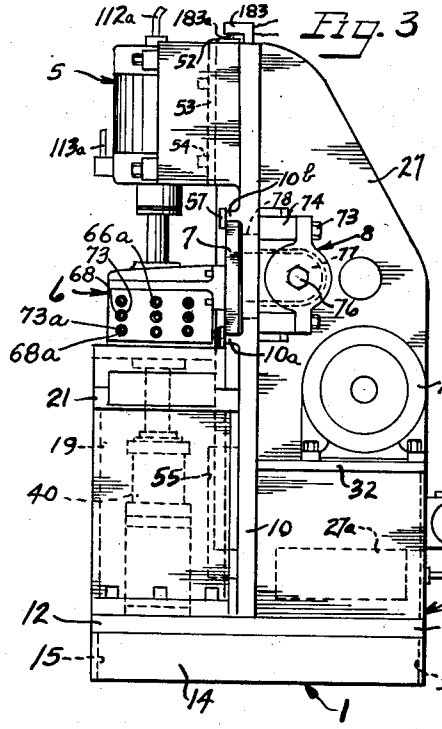

Fig. 4

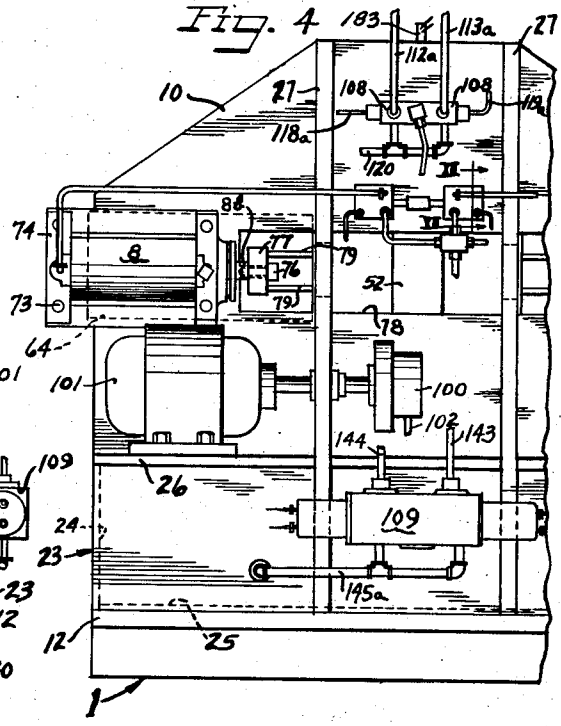

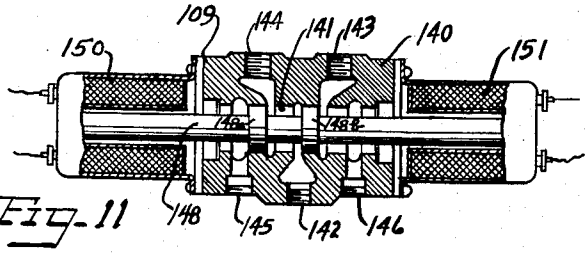

Fig. 11

Fig. 12

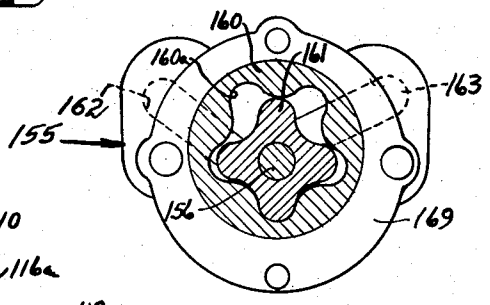

Fig. 10

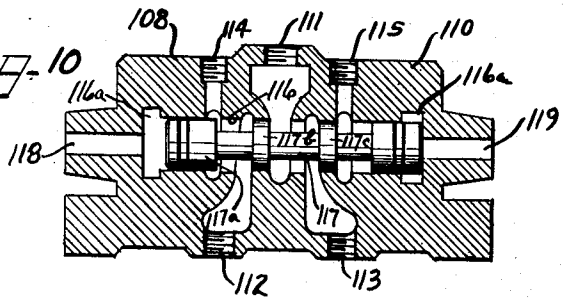

Inventors
Arthur J. Moore
Marion D. Hopkins
Aage B. Johnson

By The Firm of Charles W. Hills
Attys.

Nov. 9, 1954 A. J. MOORE ET AL 2,693,842

EVAPORATOR FORMING MACHINE

Filed Sept. 16, 1947 4 Sheets-Sheet 3

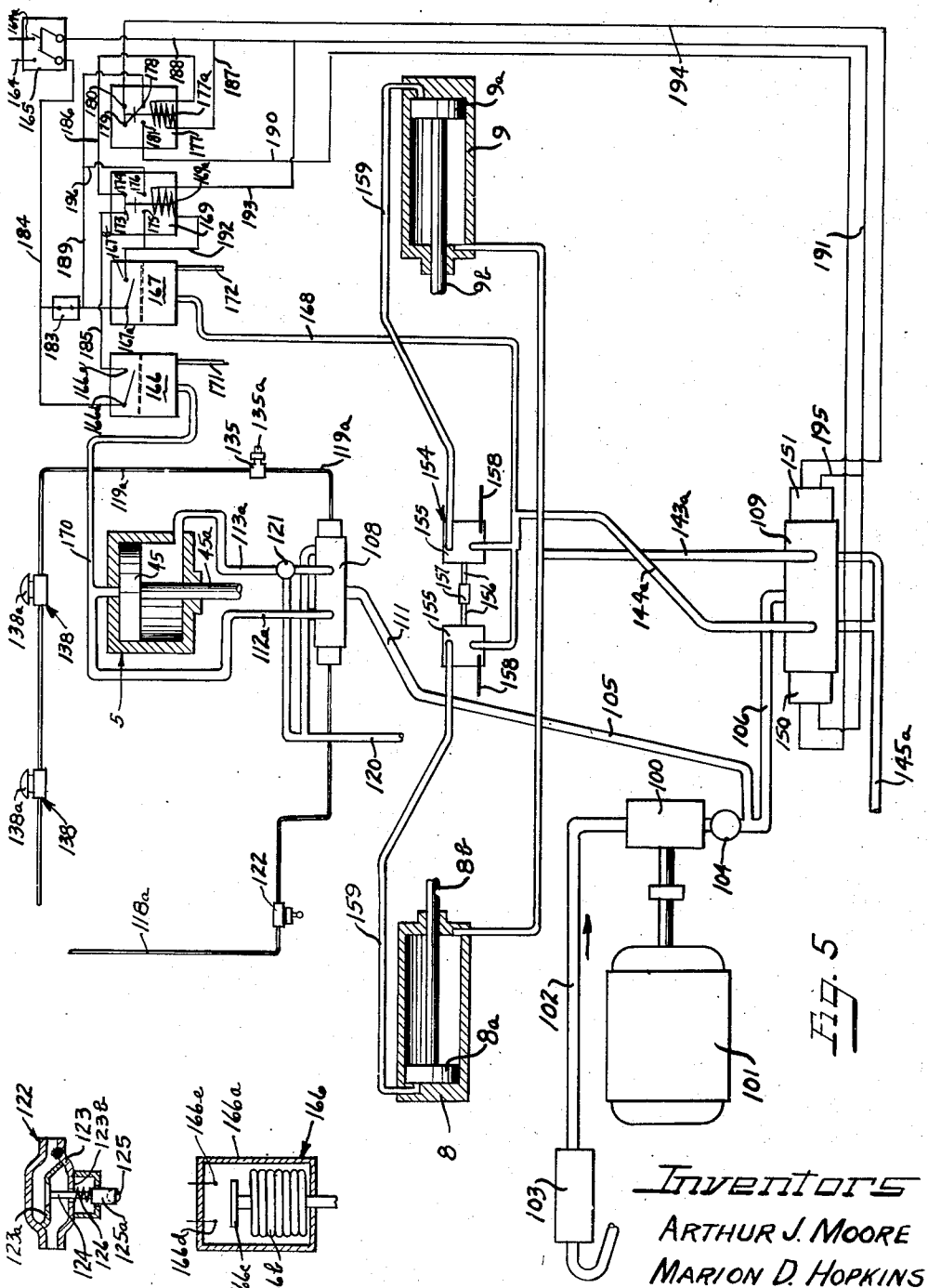

Fig. 5

Fig. 13

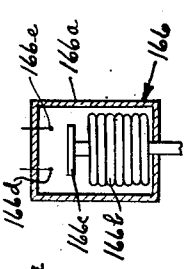

Fig. 14

Inventors
ARTHUR J. MOORE
MARION D. HOPKINS
AAGE B. JOHNSON

by The Firm of Charles H. Hill Attys.

Nov. 9, 1954 A. J. MOORE ET AL 2,693,842

EVAPORATOR FORMING MACHINE

Filed Sept. 16, 1947 4 Sheets-Sheet 4

Fig. 6

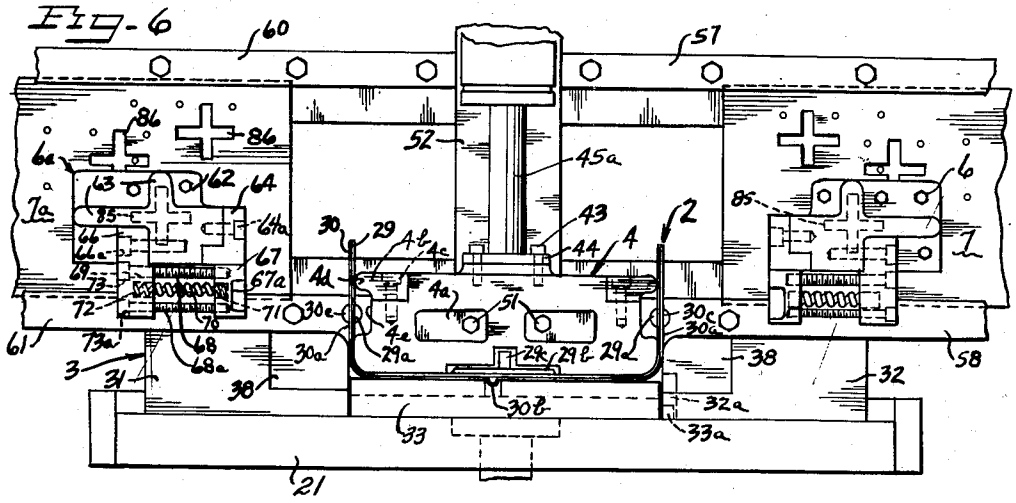

Fig. 7

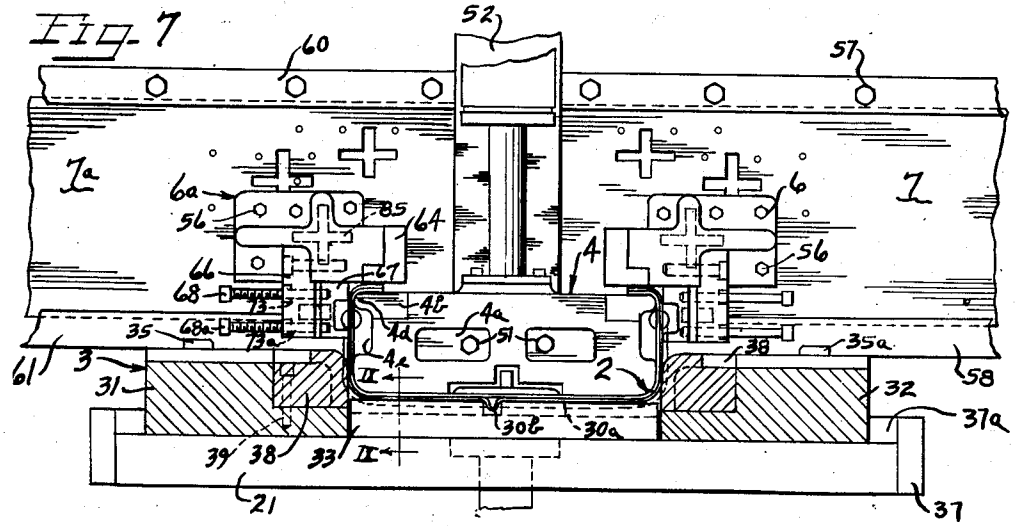

Fig. 8

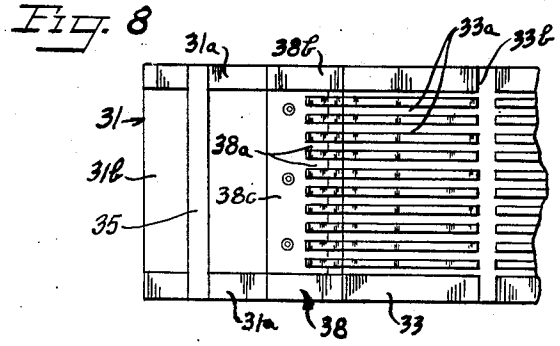

Fig. 9

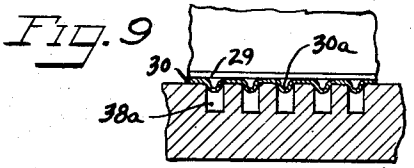

Inventors

ARTHUR J. MOORE

MARION D. HOPKINS

AAGE B. JOHNSON

By The firm of Charles B. Hill Attys.

United States Patent Office

2,693,842

Patented Nov. 9, 1954

2,693,842

EVAPORATOR FORMING MACHINE

Arthur J. Moore, Chicago, Marion D. Hopkins, River Forest, and Aage B. Johnson, Chicago, Ill., assignors to Houdaille-Hershey Corporation, Detroit, Mich., a corporation of Michigan

Application September 16, 1947, Serial No. 774,292

4 Claims. (Cl. 153—34)

This invention relates to a machine for shaping articles by bending operations.

Specifically, the invention deals with a machine for accurately bending sheet material, such as sheet metal evaporator blanks, into finished shape without damaging or collapsing embossments or similar preformed portions in the blanks.

The invention will hereinafter be specifically described as embodied in a machine for bending embossed flat sheet metal evaporator blanks into U-shaped evaporator units, but it should be understood that the invention is not limited to such an embodiment, being generally applicable to any machine for accurately bending blanks.

The machine of this invention includes a blank receiving bed shaped in conformity with embossments on the blank and having a central portion movable between fixed dies at each end thereof. This movable portion is supported on a fluid cushion. A plunger having die portions at the lower corners thereof coacts with the fixed dies and overlies the movable portion of the bed. A flat sheet metal blank placed on the bed projects on either side of the movable portion to overlie the fixed dies. When the plunger is actuated to press on the portion of the blank overlying the movable portion of the bed, the intermediate portion of the blank and the bed is moved downwardly relatively to the fixed dies to effect the bending operation. This bending operation takes place between the stationary die portions of the bed and the die portions of the plunger, and the bending is effected without confining the entire wall of the blank that is being bent relative to the wall portion between the movable bed and the plunger.

Embossments on the blank prevent bowing of the wall portion that is bent during the bending operation, and the movable bed portion holds the central part of the blank in its original flat condition.

A U-shaped unit is formed by the above-described bending operation. In addition, according to this invention, the machine forms flanges at the free ends of the legs of the U-shaped unit. These flanges are created by laterally shiftable dies coacting with the upper corners of the plunger to bend the free ends of the unit over the top of the plunger. When the plunger is retracted, the finished unit is easily stripped by sliding it endwise off the plunger.

The plunger and the laterally shiftable flange-forming dies are actuated by fluid under pressure.

The entire machine is self-contained, including storage tanks for accommodating fluid, and can be quickly reset to accommodate various forms and sizes of workpieces. An automatic timing circuit is provided on the machine so that all parts thereof will operate in properly timed sequence, thereby only necessitating initial starting of the machine whereupon the machine will go through its entire operating cycle.

It is therefore an object of this invention to provide a machine for automatically bending a blank, having preformed embossments or the like, into a predetermined configuration without distorting or deforming the embossments.

Another object of this invention is to provide a machine which performs a multiplicity of consecutive bending operations on a blank by means of a plurality of automatically controlled cylinders mounted on a single support structure.

A further object of this invention is to provide a machine for performing a multiplicity of consecutive bending operations having a die support adapted to permit both lateral and vertical adjustments of the dies thereon without affecting the operation of the die support.

A still further object of this invention is to provide a machine for automatically bending blanks having primary and secondary bending arms in which the length of travel of the secondary bending arms is common for all sizes of blanks.

Another object of this invention is to provide an automatic bending machine that employs a plurality of separately operated valves which act to make reversal of the machine impossible until a complete cycle of operation has been performed.

A still further object of this invention is to provide a die having a portion automatically adjustable for maintaining a pressure on the unsupported portion of the blank during a bending operation.

An important object of this invention is to provide a machine for bending blanks by means of opposed slides wherein the rate of travel of said slides is equalized by means of two hydraulic motors coupled together to form a metering device.

Other and further objects of the invention will be apparent to those skilled in the art from the following detailed description of the annexed sheets of drawings, which, by way of a preferred example, illustrate one embodiment of the invention.

On the drawings:

Figure 1 is a front elevational view of the evaporator forming machine of the present invention;

Figure 2 is a plan view of the evaporator forming machine;

Figure 3 is a side elevational view of the evaporator forming machine shown in Figure 2;

Figure 4 is a fragmentary rear elevational view of the machine;

Figure 5 is a schematic drawing of the control circuit used for regulating the operations of the evaporator forming machine;

Figure 6 is an enlarged fragmentary front elevational view of the operating portion of the machine showing the parts after the first bending operation has been completed;

Figure 7 is an enlarged fragmentary front elevational view, partly in section, showing the parts after the second bending operation has been completed;

Figure 8 is a fragmentary plan view of the work supporting bed of the evaporator forming machine of this invention;

Figure 9 is a fragmentary sectional view taken on line IX—IX of Figure 7;

Figure 10 is an enlarged sectional view taken through the center of a pneumatic control valve used in the control apparatus of this invention;

Figure 11 is an enlarged elevational view, partly broken away and partly in section, of a solenoid operated hydraulic control valve used in the evaporator forming machine of the present invention;

Figure 12 is an enlarged sectional end view taken on line XII—XII of Figure 4 showing the hydraulic motor which is used as a metering device;

Figure 13 is an enlarged vertical sectional view through one of the air pilot valves used in the control mechanism of this invention;

Figure 14 is an enlarged fragmentary vertical sectional view through one of the pressure sensitive electrical switches used in the electrical control circuit;

Figure 15 is a plan view of the underside of an evaporator blank to be shaped by the machine of this invention; and

Figure 16 is an isometric view of an evaporator unit formed from the blank of Figure 15 by the machine of this invention.

As shown on the drawings:

In Figures 1 and 2 is shown a support structure **1** having a central vertical panel **10** on which is mounted the working elements of the machine. An evaporator blank **2** which is to be bent into an evaporator unit as illustrated in Figure 16 is positioned on a bedplate **3** that has a central portion **33** movable downwardly between a pair of fixed die members **31, 32.**

A plunger **4** is disposed in alignment with the central yieldable portion **33** of the bedplate **3** depending directly thereabove from the piston rod of a hydraulic piston and cylinder assembly **5** mounted on one face of the vertical mounting panel **10**. The plunger **4** is arranged to move downwardly and press the evaporator blank **2** against the central yieldable portion of the bedplate which then moves downwardly permitting the blank to be bent in a U-shape between the fixed die members, as illustrated in Figure 6.

A pair of oppositely disposed horizontally movable flange forming arms **6** and **6***a* are mounted on slides **7** and **7***a* respectively on the same side of the vertical mounting panel **10** as the plunger **4** but are moved with the slides horizontally toward and away from each other by hydraulic piston and cylinder assemblies **8** and **9** respectively which are mounted on the opposite face of the vertical mounting panel. These flange forming arms are arranged to move inwardly toward the U-shaped blank **2**, after it has been bent by the plunger **4**, and fold the upper ends of the blank over the top of the plunger to form hanger straps, as shown in Figure 16.

In this invention there is also provided an electrical control circuit for co-ordinating the opening of the various valves which direct fluid under pressure to the hydraulic piston and cylinder assemblies.

The support structure

As seen in Figure 1 the support structure **1** comprises a vertical structural plate member **10** which is rigidly secured as by welding to a base plate **12** supported on a plurality of I beams **13**. A pair of front and rear closure plates **15** are secured to the outer or end I beams **13** underlying the base plate **12**. A pair of side plates **14** also underlie the base plate **12** and are overlapped at their ends by the front and rear plates **15**. The base plate **12** and the closure plates **14** and **15** are all suitably secured together, as by welding, to form a unitary base structure. As seen in Figure 2, the vertical structural plate **10** extends upwardly from substantially the longitudinal center of the base plate **12**.

Disposed on the front side of the plate **10** and supported on the base **12** is a pair of air tanks **16** and **17**. Each tank comprises a pair of side walls **18**, a pair of front and rear walls **19** and a base **20**, all suitably secured together, as by welding, to form an open top tank. A cover plate **21** extends across both tanks **16** and **17** to close the tops of the tanks. Each of the tanks **16** and **17** may be suitably secured to the base plate **12** by means of a flange portion **22** which is secured to the base plate by means of a plurality of cap screws **22***a*.

As best seen in Figures 3 and 4, on the rear side of the vertical structural plate **10**, there is disposed an oil tank **23** which is suitably secured to the base plate **12**, and to the vertical plate **10**. The tank **23** comprises a pair of side plates **24**, a base plate **25**, and a cover plate **26**, all secured together, as by welding, to form a unitary structure using the structural plate **10** as the rear wall of the oil tank.

The structural plate **10** is braced on the base plate **12** by means of two spaced apart rearwardly extending web members **27** which are welded to the base plate **12** and to the back side of the plate **10**. The oil tank **23** is fabricated to enclose the lower portions of these web support members **27** and therefore there is provided in each web member an aperture **27***a*, Figure 3, to afford access from one portion of the oil tank to the other.

Description of the evaporator blank

The present invention illustrated in the accompanying drawings is especially adapted to bend a flanged sheet metal evaporator blank **2** into a substantially U-shaped evaporator unit. This evaporator blank **2**, shown in Figures 1, 6, 9 and 15, comprises two sheets of metal **29** and **30** suitably secured together, as by welding or brazing. The inner sheet **29** is a substantially flat member while the outer sheet **30** has a plurality of longitudinal corrugations **30***a* formed therein. When these sheets are secured together, a series of substantially parallel fluid passages are defined therebetween. Near the center of the outer sheet **30** there is one lateral corrugation **30***b*, Figures 6 and 15, that crosses and has communication with the longitudinal corrugations **30***a*. Lateral corrugations **30***c* are also provided near each end of the outer sheet **30** which communicates with the longitudinal corrugations **30***a* and, together with similar corrugations **29***a* in the inner sheet **29**, form lateral headers. The inner sheet **29** also is provided near its central section with a longitudinal corrugation **29***b* which has secured therein a connector **29***c*.

Construction of the bedplate

According to the general features of this invention, the blank **2** is positioned on a work supporting bedplate **3** between two sets of limit blocks **35** and **35***a*. The bedplate **3** comprises two fixed die block members **31** and **32** suitably secured in place on the cover member **21** of the air tanks **16** and **17**. A central yieldable pressure pad **33** disposed between the fixed die members **31** and **32** is held with its lower surface in spaced relation above the cover member **21** and with its upper surface flush with the upper surfaces of the fixed dies **31** and **32**.

As shown in Figure 1, each die member **31** and **32** is positioned on the cover member **21**. A plurality of set screws **36** pass freely through openings in a retaining block **37** and are threaded into the cover member **21**. A spacer block **37***a* of suitable dimensions is disposed between each die member and the retainer block **37**.

Each of the fixed die members **31** and **32**, Figures 7 and 8, have marginal ledge portions or ribs **31***a* which extend slightly above the central recess portion **31***b* and between which the blank **2** is positioned. At the inner upper corner of each die member there is provided a die insert **38**. This insert is secured to the die member by means of a countersunk cap screw **39**.

To aid in positioning the evaporator blank laterally on the bed the insert **38** is provided with a series of grooves **38***a* which are of a width and depth suitable to receive the corrugations on the outer plate **30** of the blank **2**. Marginal ledge portions or ribs **38***b* are provided on the inserts **38** to correspond to the ledge portions **31***a* of the member **31**. The inserts **38** also each have a recess portion **38***c* which is flush with the recess portion **31***b* of the member **31**. The grooves **38***a* also extend downwardly along the inner face of the insert **38** to receive the corrugations of the evaporator blank as it is bent and forced downwardly between the die members.

As is clearly illustrated in Figure 8, the pressure pad **33** is provided with a plurality of grooves **33***a* which correspond and are in alignment with the grooves **38***a* of the insert **38** and are adapted to receive the longitudinal corrugations in the outer plate of the evaporator blank. The pressure pad **33** is also provided with a lateral groove **33***b* adapted to receive the lateral corrugation **30***b* of the blank.

Thus it is seen that when the evaporator blank is positioned on the bedplate **3** of this forming machine, the corrugations are received in the grooves provided in the fixed die members and the pressure pad. The lateral headers formed at the outer ends of the blank will lie in the recess portions **38***c* or **31***b* of the die members **31** and **32**.

A fluid cushion is provided for the pressure pad **33** by means of a rod **39**, Figure 1, which extends downwardly from the pressure pad **33** and is suitably secured to the outer end of a piston rod **40***a* projecting from a pneumatic cylinder **40** and attached to a piston **40***b* slidable in the cylinder. The cylinder **40** is supported on a pedestal **40***d* and is connected by means of air pipes **41** and **41***a* to air tanks **16** and **17**, respectively. Air is maintained under pressure in the tanks **16** and **17** by a suitable air compressor (not shown) and forms a reservoir for a body of air communicating freely with the underside of the piston **40***a* in the cylinder to provide an air cushion support for the piston. As the pressure pad **33** is moved downwardly the air in the cylinder **40** is compressed and energy is stored up in the cylinder which will move the pressure pad back to its initial position when the pressure on the pad **33** is removed. As best seen in Figure 6, the top surface of the pressure pad **33** is aligned with the top surfaces of the dies **31** and **32** by means of a projection **33***a* which rides in a groove **32***a* of the die **32** and abuts the top of the groove when the surfaces are flush.

Operation of the plunger

The initial bending operation, consisting of forming the work blank **2** into a U-shaped member, as illustrated in Figures 6 and 16, is accomplished by means of a plunger or movable die member **4** which depends directly above the movable pressure pad **33** of the bedplate **3** and

is adapted to pass downwardly between the fixed die members **31** and **32**. This plunger **4** is suitably secured as by cap screws **43** to a collar **44** at the lower end of a piston rod **45***a* secured to a piston **45** (Figure 5) in the vertical hydraulic cylinder **5**. As best seen in Figure 2, a pair of support arms **48**, which are suitably secured as by welding, to the vertical structural plate **10**, extend outwardly from the plate to support the cylinder **5** which is fastened thereto by cap screws **49**.

As a means of providing rigidity to the plunger structure and to assure accuracy of alignment of the plunger **4** as it moves downwardly, web portions **4***a* of the plunger **4** are secured by means of cap screws **51** to a slidable vertical guide bar **52**. This guide bar is slidably held in alignment near its upper end by opposing surfaces of inwardly projecting arms **48***a* of the support arm **48** and by vertical retaining straps **53**, Figures 2 and 3, which are secured to the arms **48***a* by cap screws **54**. At its lower end the guide bar **52** is slidably held in alignment by a box-like structure **55**, Figure 3, which is welded to the frame member **10** and arranged to receive the bar **52** in close fitting sliding relationship in a vertical aperture which has a cross section adapted to receive the bar **52**.

In Figure 1 is illustrated the relative position of the blank **2** and the plunger **4** before the bending operation has begun. In Figure 6, the plunger has been moved downwardly forcing the blank **2** and the pressure pad **33** to move downwardly until the pressure pad **33** abuts the horizontal cover plate **21** of the tanks **16** and **17**. The blank **2** is, as clearly shown, brought into a U-shape between the plunger **4** and the fixed dies **31** and **32**.

Operation of the flange-forming arms

The second bending operation forms hanger flanges on the bent U-shaped workpiece and consists in folding the upper ends of the U-shaped workpiece **2** over the upper corners of the plunger **4** and forcing them into substantially horizontal position along the upper surface of the plunger, as shown in Figure 7. This secondary bending operation is carried out by means of the pair of oppositely disposed flange-forming arms **6** and **6***a*, which project outwardly from sliding plates **7** and **7***a*, respectively, being secured thereto by means of a plurality of cap screws **56**. The plates **7** and **7***a* are disposed on either side of the guide bar **52** and are arranged to slide toward and away from said guide bar, each being supported in sliding relation between a pair of arms **10***a* and **10***b*, Figure 3, projecting outwardly from the vertical frame member **10**. A pair of retaining straps **57** and **58**, secured to the arms **10***a* and **10***b* by a plurality of cap screws **59**, overlaps the sliding plate **7** and holds it in place between the arms **10***a* and **10***b*. A similar pair of retaining straps **60** and **61** hold the sliding plate **7***a* between the arms **10***a* and **10***b*.

Sliding movement is imparted to the plate **7** by means of a hydraulic piston and cylinder assembly **8** which is mounted on the rear face of the vertical frame member **10**, as shown in Figures 2, 3 and 4. The cylinder assembly **8** is secured by cap screws **73** to a pair of support straps **74** which are welded to the plate **10** and extend outwardly therefrom. The outer end of the piston rod **8***b* of the piston **8***a* which projects from the cylinder **8** is secured by means of a cap screw **76** to an arm-like member **77** which is fastened, as by welding, to the rear side of the sliding plate **7** and projects through an opening **78** in the frame member **10**. Lateral braces **79** extending between the arm-like member **77** and the plate **7** are provided to support the member **77**.

Thus, movement of the piston rod **8***b* in the hydraulic cylinder **8**, mounted on the rear side of the member **10**, will cause sliding movement of the plate **7** mounted on the front side of the member **10**. Inward movement of the plate **7** may be limited by the effective stroke of the hydraulic cylinder **8** or by the abutting of the sliding plate **7** against the guide bar **52**.

The sliding plate **7***a*, Figure 2, is similarly actuated by a hydraulic cylinder **9** containing a piston **9***a* which acts through a piston rod **9***b* and an arm-like member **82** to reciprocate the slide **7***a* back and forth.

In Figure 6, the relative positions of the workpiece **2** and the slides **7** and **7***a* are illustrated prior to the beginning of the bending operation. In Figure 7 the slides **7** and **7***a* have been moved inwardly to fold the upper end of the workpiece **2** down over the top surface of the plunger **4**. It is to be noted that the upper corners of the plunger **4** are provided with inserts **4***b* secured thereto by means of countersunk cap screws **4***c*. This insert has an outer curved bending edge **4***d* of suitable curvature providing a convenient means of imparting the necessary bend to the blank at this point. Immediately below the bending edge **4***d* there is a recess **4***e* on either side of the plunger **4** for receiving the headers **30***c* therein.

The flange-forming arms **6** and **6***a* are similar in construction but are oppositely disposed on their respective sliding plates. Each arm comprises a body portion **62**, Figure 6, which has a series of reinforcing ribs **63**. A contact block **64**, which may be suitably made of bronze, is secured to the inner side of the body **62** by countersunk set screws **64***a*. A support block **66** is fastened by a cap screw **66***a* to the outer face of the body **62**. As seen in Figures 6 and 7, a pressure pad **67** is supported directly below the contact block **64** by means of a pair of cap screws **68** and **68***a* each of which has one end tightly threaded into the pad **67** and the other freely journaled in an opening **69** which extends through the lower portion of the support block **66**. A spring **70** is disposed between the pad **67** and support block **66** with one end suitably held in a recess **71** of the pad **67** and the other end suitably held in a recess **72** of the block **66**.

It is thus seen, in Figure 6, that when the arm **6***a* is in the withdrawn position the spring **70** pushes the pad forwardly until the heads of the cap screws **68** and **68***a* are in the sockets **73** and **73***a*, respectively, countersunk in the support block **66**. In this position, the inner face of the pad **67** will be in alignment with the inner face of the contact block **64**.

When the arm **6***a* is moved inwardly the contact block **64** and the pad **67** will contact the workpiece approximately simultaneously. The contact block **64** will continue forwardly as it folds the upper end of the workpiece **2** over the corner of the insert in the plunger **4**. The pad **67** contacts the unsupported portion of the workpiece **2** and maintains a pressure thereon as the bending operation is carried out, thus preventing buckling of the workpiece. Since there are lateral headers **30***c* preformed in the evaporator blank near the outer ends, there is provided in the pressure pad **67** a cutout or recess portion **67***a* which is arranged to receive the header portion.

It is to be noted that projecting outwardly from the rear face of each of the arms **6** and **6***a*, there is substantially a cross-shaped projection **85**, as shown in dotted lines in Figures 6 and 7. This projection **85** is provided to facilitate aligning and positioning of the arms on the sliding plate **7** which has a mating cross-shaped recess **86** arranged to receive the projection **85**. After positioning of the projection **85** in the recess **86** the arm is secured thereon by means of cap screws **56**.

A plurality of recesses **86** and associated tapped holes are provided on the sliding plates **7** and **7***a* to accommodate the arms in various positions. Thus, in order to alter this machine for using arms that operate at different levels or that have a different effective stroke, it is only necessary to secure the required arm in the correct prelocated recess.

The control system

An important feature of this invention is the control system which causes the mechanism to proceed automatically through the bending cycle. Referring to Figure 5, there is shown a schematic drawing of this control cycle. Reference numeral **100** represents a pump secured to the rear side of the structural plate **10**, Figure 4, which supplies liquid under pressure to the hydraulic control circuits and which is driven by a motor **101**, conveniently mounted on the oil tank **23**.

The pump **100** is arranged to draw oil from a fluid line **102** which is connected to the oil tank **23** through a filter **103** positioned therein. Located on the discharge side of the pump **100** is an automatic pressure relief valve **104**. The pump **100** discharges into two lines **105** and **106** leading, respectively, to a pair of control valves **108** and **109**.

The control valve **108**, shown in detail in Figure 10, is suitably mounted on the rear face of the support plate **10** and comprises a casing **110** having an inlet opening

111 and four outlet openings 112, 113, 114 and 115. All of these openings communicate with a cylindrical central chamber 116. A valve member 117 is disposed in the chamber 116 and arranged for longitudinal sliding movement therein. At either end, the chamber 116 has an enlarged cylindrical portion 116*a* that is segregated from the central chamber by the piston-like end portion 117*a* on the valve 117, which has a substantially fluid-tight sliding fit in the walls of the chamber. Disposed inwardly along the valve 117 are two spaced apart cylindrical valve members 117*b* and 117*c* which also have a substantially fluid-tight sliding fit in the walls of the chamber. At opposite ends of the casing, air inlet passages 118 and 119 are provided for connection to a source of air under pressure.

In operation, the outlet 112 is connected to a line 112*a*, Figure 5, which leads to the top of the hydraulic cylinder 5 and the outlet 113 is connected to a line 113*a* which leads to the lower end of the cylinder 5. The outlets 114 and 115 are connected to a common line 120 that discharges into the oil tank 23. A pressure relief valve 121 is disposed in the line 113*a* and arranged to direct the oil to the line 120 if the pressure in the line 113*a* becomes excessive.

The air inlet passages 118 and 119 are connected, respectively, to air lines 118*a* and 119*a*, both of which lead to the air tank 16, Figure 1. In the line 118*a* there is arranged a cam actuated pilot valve 122. This valve may suitably comprise, as shown in Figure 13, a casing 123 having an inner cross partition 123*a* affording a valve seat for receiving the head of a poppet type valve 124. The stem of the valve is connected to a cam roller follower 125 through a cylindrical roller housing 125*a* in which the roller is pivotally mounted. Upward movement of the cam roller follower 125 causes the valve to move off the seat and permits air under pressure to pass through the valve. A spring 126 is provided in the lower part of the valve casing disposed about the valve stem. At its lower end the spring bears against the upper end of the cam roller housing 125*a* and at its upper end abuts a cross partition 123*b* of the casing 123. When the valve is moved upwardly the spring 126 is compressed and positioned to move the valve back onto its seat as soon as the pressure is withdrawn from the cam roller.

The air pilot valve 122 is secured to a slide retaining strap 57, Figure 1, by cap screws 127 with a cam roller 125 projecting downwardly into the path of a cam 130 mounted on the slide 7. The cam 130 is pivotally mounted as at point 131 to a plate 132 secured to the slide 7. A spring 133, anchored at one end on the plate 132 and at the other end on the cam 130, tends to hold the cam 130 against a stop pin 134.

With this construction, the spring 133 will permit the cam 130 to pivot about the point 131 when it comes in contact with the cam roller as the slide 7 is moved inwardly, and thus the valve 122 will not be actuated. However, on the outward stroke of the slide 7, the cam 130 will be held in an upright position against the stop pin 134 by the spring 133 and will therefore be in a position to force the cam roller 125 upwardly to open the valve.

As is shown in Figure 10, when air under pressure enters the inlet 118 of the control valve 108 after passing through the pilot valve 122, the valve member 117 will be moved to the right due to the action of the air on the piston-like end portion 117*a* of the valve member. With the valve in this position, oil entering the inlet 111 will be directed out through the opening 113 to the line 113*a* and thence to the bottom of the hydraulic cylinder 5 to lift the piston 45 therein. Any oil in the line 112*a* will be drained back through the opening 114 and the line 120. Thus the piston 45 is raised by hydraulic pressure through the tripping action of the slide 7 as it moves outwardly after completing its bending operation.

In the air line 119*a* there is disposed a pilot valve 135 which is similar in its internal construction to the valve 122, illustrated in Figure 13, but differs in that a push button 135*a* is secured to the valve stem instead of the cam roller 125. This valve is mounted on the left-hand side of the machine, as seen in Figures 1 and 2, by means of a bracket 136 secured to the vertical frame member 10. The push button is so positioned that the slide 7*a* will depress the button at the end of its outward movement. Thus, the valve 135 will be held open by the slide 7*a* and it will automatically be closed by spring pressure when the slide moves inwardly. This is a safety feature which prevents air under pressure from being supplied to the control valve 108 for actuating the valve to cause downward movement of the piston in the hydraulic cylinder 5 at any part of the cycle except when the slides are in their outer position.

A pair of pilot valves 138 is also provided in the line 119*a*. These valves are similar to the pilot valves 122 and 135 except that enlarged push buttons 138*a* are furnished which are suitable for being actuated by the operator's hand. These valves 138 are mounted across the front of the machine on the face of the cover plate 21 of the air tanks 16 and 17. To start the operating cycle the operator, using both hands, depresses the buttons 138*a* to permit air under pressure to pass through the valves 138 and through the valve 135, which is held open by the slide 7*a*, to enter the inlet 119 of the control valve 108, and move the valve member 117 to the left. In this position, oil entering the inlet 111 will be directed out through the opening 112 to the line 112*a* and thence to the top of the hydraulic cylinder 5 to force the piston 45 therein downwardly to begin the bending operation.

The second control valve 109 into which the pump 100 discharges is illustrated in Figure 11 and comprises a casing 140 having a central cylindrical longitudinal chamber 141. An inlet opening 142 and four outlet openings 143, 144, 145 and 146 are provided, each of which communicates with the central chamber 141. A longitudinal member 148, disposed in the chamber 141, has two enlarged cylindrical valve portions 148*a* and 148*b* arranged in substantially fluid-tight sliding relation with the walls of the chamber. At either end the member 148 extends into a pair of solenoids 150 and 151, respectively. Thus each end of the member 148 acts as the core of a solenoid. The solenoids 150 and 151 are arranged to be energized separately and alternately, pulling the member 148 either to the left or to the right.

In operation the inlet 142 is connected to the supply line 106 leading from the pump. The outlet 143 is connected to a line 143*a* which has two branches, one leading to the inner end of each hydraulic cylinder 8 and 9. The outlets 145 and 146 are connected to a common line 145*a* which leads to the oil tank 23. The outlet 144 is connected to a line 144*a* leading to a hydraulic metering device 154.

When the member 148 of the valve 109 is moved to the left, as illustrated in Figure 11, oil entering through the opening 142 will be directed out through the opening 144 to the line 144*a* leading to the hydraulic metering device 154. When the solenoid 151 is energized the member 148 will be drawn to the right and communication will be established between the inlet port 142 and the outlet 143 for directing liquid through the line 143*a* to the inner ends of the hydraulic cylinders 8 and 9.

The hydraulic metering device 154 may suitably comprise two identical rotary pumps 155 having shaft members 156 coupled together by a connector or coupling 157. These pumps are arranged to be operated as a hydraulic motor by the fluid entering from the line 144*a*. Since the shafts of the motor are coupled together both motors will rotate at the same speed and the quantity and pressure of fluid discharged will be equalized and will be delivered through lines 159 to the outer end of the hydraulic cylinders 8 and 9.

In Figure 12 is shown an end view of a rotary pump suitable for use as a metering device. This pump comprises a casing 169 having a central opening in which a ring gear 160 having internal teeth 160*a* is journaled for rotation. A cooperating pinion gear 161 with external teeth 161*a* is eccentrically mounted inside the ring gear 160. The pinion gear is secured to the drive shaft 156 and arranged to rotate in a counterclockwise direction as seen in Figure 12. An inlet port 163 is furnished at one side of the casing and an outlet port 164 is provided on the opposite side of the casing. The teeth are so designed that the tooth spaces of the meshing gears form a series of gradually expanding closed chambers during a part of the revolution and a series of gradually contracting closed chambers during another part of the revolution; and the ports are so arranged that, when the unit is operated as a pump, the expanding chambers serve to suck fluid from the inlet port 163 and the contracting chambers serve to expel fluid through the outlet port 162. When the unit is operated as a hydraulic motor, the fluid entering the in-

let **163** will cause counterclockwise rotation of the gears and of the shaft **156**.

A bleed line **158**, Figure 5, is provided for each hydraulic motor to direct any excess fluid in the motor to the oil tank **23**.

The solenoid control valve **109** is controlled by means of an electrical circuit which in turn is responsive to the pressures existing in the hydraulic line leading to the hydraulic cylinders. This electrical control circuit comprises a switch **165** for closing the circuit at the source of power, and an automatic switch **166** which is responsive to the hydraulic pressure in a line **170** which is a continuation of the pressure line **112***a* leading to the top of the piston **45** in the hydraulic cylinder **5**. This switch **166** may suitably comprise, as illustrated in Figure 14, a casing **166***a* in which is mounted a flexible diaphragm **166***b*. Secured to the top of the diaphragm **166***b* is a contact member **166***c* adapted to be moved upwardly to close a circuit between the two electrical conductors, **166***d* and **166***e*, disposed therein. It is to be understood that liquid under pressure acts on the underside of the diaphragm and that the diaphragm is so designed as to resist upward expanding movement thereof until the desired pressure of the hydraulic line **170** has been reached. This pressure in the hydraulic line will be reached when the piston **45** reaches the bottom of its downward travel since the pump **100** will continue to pump liquid into the line **112***a* and thus build up further pressure in the line **170**. Thus the pressure switch **166** is arranged to be actuated to close the electrical switch therein after the piston **45** has reached the bottom of its stroke.

A second pressure actuated switch **167** is similarly constructed to the switch **166** and is responsive to hydraulic pressure in the line **168** which leads from the supply line **144***a*. Pressure will be built up in the line **168** after the pistons **8***a* and **9***a* of the horizontally disposed hydraulic cylinders **8** and **9**, respectively, have been moved inwardly to the end of their stroke. Further introduction of liquid into the line **144***a* will cause the building up of pressure in the line **168** and actuation of the switch **167**. A pair of bleed lines **171** and **172** are provided for the switches **166** and **167** to bleed excess liquid to the oil tank **23**.

A solenoid switch **169** is provided in the electrical control circuit which is equipped with a plunger arranged to close a circuit between a pair of contact lines **173** and **174** when the solenoid **169***a* is deenergized and to close another circuit between the contact points **175** and **176** when the solenoid is energized.

A second solenoid switch **177** is provided which has an armature adapted to close a circuit between the electrical contact points **178**, **179** and **180** when the solenoid is deenergized and to close a circuit between the points **178** and **181**, when the solenoid is energized.

For the purpose of deenergizing the electrical control circuit at the end of the bending operation there is provided a limit switch **183** which is disposed, as shown at Figure 3, at the top of the vertical structural member **10**, with a plunger **183***a* depending downwardly into the path of the vertically moving guide bar **52**, which is disposed centrally on the front side of the structural member **10**. When the bending operation is completed and the plunger **4** is drawn upwardly by the piston **45**, the guide bar **52** will slide upwardly and at its extreme upper position will contact the plunger **183***a* to open the connection and thus deenergize the circuit.

It is to be understood, of course, that when the next bending cycle is begun and the plunger **4** is moved downwardly by the initial application of hydraulic pressure to the top of the piston **45**, the guide bar **52** will also move downwardly and the circuit will automatically close by spring pressure being exerted on the plunger **183***a*.

The bending operation

The complete bending operation performed on the evaporator by the machine of this invention is performed in the following manner. An evaporator blank **2** is placed on the bedplate **3** with the corrugations or embossments properly positioned in the grooves provided in the die members **31** and **32** and in the pressure pad **33**. Then, assuming that the sliding plates **7** and **7***a* are in their outer position, and that the pump **100** has built up the necessary pressure in the hydraulic line and that there is sufficient pressure in the air chambers, the operator compresses the buttons **138***a* to permit air under pressure to pass through the valves **138** in the line **119***a* and through valve **135** which is held in open position by the slide **7***a*. This air will actuate the valve member in the control valve **108** and move it to the left to permit oil under pressure entering the valve from the line **105** to pass through the valve and be discharged through the outlet **112** into the line **112***a* which leads to the top of the piston **45**. The piston **45** will thus be moved downwardly to begin the downward stroke of the plunger **4**. The plunger proceeds downwardly and contacts the work piece **2** bending it between the fixed dies **31** and **32**. Downward movement of the plunger will be arrested when the pressure pad **33** contacts the cover member **21**, at which point the hydraulic pressure in the line above the piston **45** and in line **170** will begin to build up and, at a predetermined pressure, will cause the pressure actuated switch **166** to close the circuit at the contact points **166***d* and **166***e* in the switch. A circuit is thus established between the power supply conductor **164**, the closed switch **165**, the conductor **184**, the switch **166**, the conductor **185**, contact points **173** and **174** in the switch **169**, conductor **186**, the solenoid **177***a* in the solenoid switch **177**, a conductor **187** and the conductor **188**, back to the power supply conductor **164***a*. Thus, the solenoid **177***a* will be energized to pull the armature down and close a circuit between the points **181** and **178** in the switch **177**. This will cause a second current to flow between the power supply conductor **164**, the conductor **184**, the closed switch **183**, a conductor **189**, the contact points **178** and **181** in the solenoid switch **177**, a conductor **190**, the solenoid **150** in the solenoid control valve **109**, a conductor **191**, and the conductor **188** back to the power supply conductor **164***a*. Energization of the solenoid **150** causes the valve member **148** to be drawn to the left, as shown in Figure 11, permitting oil under pressure in the line **106** to pass through the inlet **142** to the outlet **144** and then through the line **144***a* to the hydraulic metering device **154**. The liquid leaving the hydraulic metering device moves the pistons **8***a* and **9***a* inwardly to cause the slides **7** and **7***a* to be moved inwardly and thus the flange forming arms **6** and **6***a* extending from the slides will be moved inwardly to complete the bending operation.

When the slides **7** and **7***a* have moved inwardly to the end of the stroke, pressure will be built up in the line **144***a* and the line **168** which lead to the pressure switch **167**. When sufficient pressure is built up in the switch, the switch **167** will be closed across the contact points **167***a* and **167***b*. A circuit will thus be established between the supply conductor **164**, the conductor **184**, the switch **183**, the switch **167**, the conductor **192**, the solenoid **169***a* of the solenoid valve **169**, a conductor **193**, and the conductor **188** back to the power supply conductor **164***a*. Thus, the solenoid **169***a* is energized and causes the armature to move downwardly establishing contact between the points **175** and **176** and breaking contact between the points **173** and **174** within the switch. The breaking of the contacts between the points **173** and **174** will cause the deenergization of the solenoid **177***a*. The armature of this solenoid will therefore move upwardly under spring pressure to break the contact between the points **178** and **181** and establish contact between the points **178** and **179** and **180** within the switch **177**. Breaking of the contact between the points **178** and **181** in the switch **177** causes the deenergization of the solenoid **150** in the control valve **109**.

However, the energization of the solenoid **169***a* causes a contact to be made between the points **175** and **176** and establishes a circuit between the power supply conductor **164**, the conductor **184**, the switch **183**, the conductor **189**, the contact points **178**, **179** and **180** in the switch **177**, a conductor **194**, the solenoid **151**, a conductor **195**, a conductor **191** and the conductor **188** back to the power supply conductor **164***a*.

It is to be noted at this point that when the armature of the solenoid **169***a* is moved downwardly by the energization of the solenoid, it makes a holding circuit between the power supply conductor **164**, the conductor **184**, the switch **183**, the conductor **189**, a conductor **196**, the contact points **176** and **175** in the switch **169**, a conductor **192**, the solenoid **169***a*, the conductor **193**, the conductor **188** back to the power supply conductor **164***a*. Thus, there is established a holding circuit which will keep the solenoid **169***a* energized even though pressure in the switch **167** should drop off and allow the contact across the points **167***a* and **167***b* to be opened.

When the solenoid **151** is energized the valve member **148** will be drawn to the right permitting oil under pres-

sure entering through the inlet **142** to pass out the opening **143** into the line **143***a* which leads to the inner side of the pistons **8***a* and **9***a* in the hydraulic cylinders **8** and **9**, respectively, causing these pistons to be moved outwardly and return the slides **7** and **7***a* to their outer positions. Movement of the valve member **148** to the right also permits oil under pressure in the line **144** to be drained out the outlet **145** back to the oil tank **23**.

When the slides **7** and **7***a* move outwardly, the slide **7** will trip the pilot valve **122** and permit air under pressure to be introduced into the inlet **118** of the control valve **108** and cause the valve member **117** to be moved to the right. This will permit oil to be drained back through the opening **112** and the outlet **114** to the oil tank **23** and will permit oil under pressure entering at the inlet **111** to be directed to the outlet **113** and thence through the line **113***a* to the lower side of the piston **45** to move the piston upwardly.

When the piston moves upwardly the guide bar **52** secured to the plunger **4** will also move upwardly and open the switch **183** located on the top of the frame member **10** and thus deenergize the electrical circuit.

With the plunger **4** in the upper position, the blank **2**, which has now been bent into an evaporator unit, may be stripped from the plunger by sliding it toward the operator.

Thus it is seen that there is provided in this invention a bending machine having a work receiving bed adapted to hold a work sheet having preformed embossments in such a way that the embossments will not be deformed during the bending operation. This machine also makes use of two separated valves both of which must be depressed by the operator's hands before the machine will cycle after loading and incorporates a control circuit which makes it necessary for the machine to complete its cycle before it can begin a second cycle. This not only protects the operator but renders it impossible to reverse movement of the cylinders after starting until a complete cycle of operation is performed thus protecting both the blank and the machine from accidental or intentional damage through irregular sequence of pressure movements. The machine is arranged to perform its complete sequence of operation and automatically stops for unloading or removal of finished work and the introduction of a new unformed blank and may not be started again except by depression of the two separate hand operated control valves **138**.

There is also provided in this invention a bending machine in which it is necessary, for changes in size of an evaporator blank, only to replace the punch **4**, the arms **6**, **6***a* and the pressure pad **33**, the length of travel of the bending being common to all sizes of blanks.

It will, of course, be understood that various details of construction may be varied through a wide range without departing from the principles of this invention and it is, therefore, not the purpose to limit the patent granted hereon otherwise than necessitated by the scope of the appended claims.

I claim as my invention:

1. A bending machine comprising a frame member including an upright flat faced support, a pair of work supporting dies on said frame in front of said flat faced support and having a space therebetween together with top work supporting faces and side work engaging faces, said dies adapted to receive a workpiece on the top faces thereof to carry the workpiece in spanning relation across the space therebetween, a plunger member mounted on said upright support having a bottom workpiece engaging face for acting on the spanning portion of the workpiece between the dies, means for reciprocating said plunger to act against said spanning portion of the workpiece for bending the workpiece to form upstanding side legs thereon, flat plates slidably mounted on said flat faced upright support, flange forming arms mounted on said flat plates and projecting outwardly therefrom above said dies at levels accommodating swinging movement of the die supported portions of the workpiece from the top faces of said dies into the upstanding leg forming position, and means for moving said plates toward each other to carry the arms over the plunger for forming inturned flanges on the upper ends of the side legs of the workpiece.

2. A bending machine comprising a base, an upright frame plate on said base, a pair of spaced dies above said base and in front of said upright frame plate, a movable pressure pad between said dies, a first fluid pressure cylinder and piston assembly mounted on said upright frame plate above said movable pressure pad, a plunger carried by the piston rod of said first cylinder and piston assembly and arranged to fit between said dies and to coact with said movable pressure pad to bend a blank on the pressure pad between said dies, a pair of slide plates carried flatwise on the front of said upright frame plate, the slide plates of said pair being on opposite sides of said plunger, die fixtures adjustably mounted on said slide plates and projecting from said slide plates for coaction with said plunger, and a pair of second cylinder and piston assemblies carried by said upright frame plate for driving said slide plates laterally to move the die fixtures mounted thereon toward and away from said plunger to bend a blank laterally of the plunger.

3. A self-contained shaping machine which comprises a base, an upright frame plate on said base, spaced tanks on said base on one side of said upright plate, a cover plate extending across the tops of said tanks, spaced dies mounted on said cover plate, a fluid pressure cylinder and piston assembly mounted on said base between said tanks and having a piston rod extending upwardly through said cover plate and having an end above said cover plate, piping between said tanks and said fluid pressure cylinder of said cylinder and piston assembly, a pressure pad between said dies carried by the end of said piston rod above said cover plate, a plunger arranged to fit between said dies, and means carried by said upright frame plate for moving said plunger to coact with said pressure pad and to bend an object on the pressure pad between said dies.

4. A machine for forming flat embossed metal evaporator blanks into finished U-shaped evaporators which comprises a base, an upright frame plate on said base, a pair of spaced dies above said base and in front of said upright frame plate for supporting end portions of a flat embossed evaporator blank, said dies having recesses for receiving the embossments of said blank, a movable pressure pad between said dies having a plurality of grooves in alignment with the recesses of said dies for receiving the embossments of said blank, a first fluid pressure cylinder and piston assembly mounted on said upright frame plate above said movable pressure pad, a plunger carried by the piston rod of said first cylinder and piston assembly and arranged to fit between said dies and to coact with said movable pressure pad to bend a blank on the pressure pad between said dies, a pair of slide plates carried flatwise on the front of said upright frame plate the slide plates of said pair being on opposite sides of said plunger, die fixtures adjustably mounted on said slide plates and projecting from said slide plates for coaction with said plunger, a pair of second cylinder and piston assemblies at the rear of said upright frame plate, said upright frame plate having a pair of laterally extending openings one on each side of said plunger, and arm members projecting from the piston rods of said second cylinder and piston assemblies through said openings to connect with the slide plates for driving said slide plates laterally to move the die fixtures mounted thereon toward and away from said plunger to bend a blank laterally of the plunger.

References Cited in the file of this patent

UNITED STATES PATENTS

Number	Name	Date
Re. 19,448	Johnson	Feb. 5, 1935
337,113	Bailey	Mar. 2, 1886
482,962	Gordon	Sept. 20, 1892
504,520	Davis	Sept. 5, 1893
505,541	Strong	Sept. 26, 1893
507,175	Singer	Oct. 24, 1893
510,103	Thomas	Dec. 5, 1893
644,294	Kennedy	Feb. 27, 1900
1,034,466	Kennedy	Aug. 6, 1912
1,109,522	Fraser	Sept. 1, 1914
1,138,639	Dietrich	May 11, 1915
1,377,150	Hagstrom	May 3, 1921
1,433,879	Fancher	Oct. 31, 1922
1,434,068	Schlafly	Oct. 31, 1922
1,540,131	Johannesmeyer	June 2, 1925
1,622,375	Dahmen	Mar. 29, 1927
1,664,485	Rode	Apr. 3, 1928
1,706,073	Rode	Mar. 19, 1929
1,934,207	Pennock	Nov. 7, 1933

(Other references on following page)

UNITED STATES PATENTS

Number	Name	Date
2,031,345	Tinkham	Feb. 18, 1936
2,229,862	Menges	Jan. 28, 1941
2,241,807	Cotner	May 13, 1941
2,277,640	Harrington	Mar. 24, 1942
2,302,115	Gazey	Nov. 17, 1942
2,307,544	Robinson	Jan. 5, 1943
2,336,351	Flowers	Dec. 7, 1943
2,354,566	Yost	July 25, 1944
2,399,348	Hobbs	Apr. 30, 1946
2,417,794	Werner	Mar. 18, 1947
2,439,015	McClelland	Apr. 6, 1948
2,506,958	Hallenbeck	May 9, 1950
2,530,222	Bohaboy	Nov. 14, 1950

FOREIGN PATENTS

Number	Country	Date
2,664	France	Dec. 24, 1846
119,968	Germany	May 31, 1901
209,059	Great Britain	Oct. 30, 1924
482,769	Great Britain	Apr. 5, 1938