(12) INTERNATIONAL APPLICATION PUBLISHED UNDER THE PATENT COOPERATION TREATY (PCT)

(19) World Intellectual Property Organization
International Bureau

(43) International Publication Date
30 August 2007 (30.08.2007)

PCT

(10) International Publication Number
WO 2007/095950 Al

(51) **International Patent Classification:**
F16M 11/12 (2006.01) ***F16M 11/18*** (2006.01)

(21) **International Application Number:**
PCT/DK2007/000085

(22) **International Filing Date:**
21 February 2007 (21.02.2007)

(25) **Filing Language:** English

(26) **Publication Language:** English

(30) **Priority Data:**
PA 2006 00245 21 February 2006 (21.02.2006) DK

(71) **Applicant** *(for all designated States except US):* **STOBBE TECH HOLDING A/S** [DK/DK]; Vejlemosevej 60, DK-2840 Holte (DK).

(72) **Inventor; and**
(75) **Inventor/Applicant** *(for US only):* **STOBBE, Per** [DK/DK]; Vejlemosevej 60, DK-2840 Holte (DK).

(74) **Agent: STOBBE, Per;** Vejlemosevej 60, DK-2840 Holte (DK).

(81) **Designated States** *(unless otherwise indicated, for every kind of national protection available):* AE, AG, AL, AM, AT, AU, AZ, BA, BB, BG, **BR,** BW, BY, BZ, CA, CH, CN, CO, CR, CU, CZ, DE, DK, DM, DZ, EC, EE, EG, ES, FI, GB, GD, GE, GH, GM, GT, HN, **HR,** HU, **ID,** IL, IN, IS, **JP,** KE, KG, KM, KN, KP, KR, KZ, LA, LC, LK, LR, LS, LT, LU, LV, LY, MA, MD, MG, MK, MN, MW, MX, MY, MZ, NA, NG, NI, NO, NZ, OM, PG, PH, PL, PT, RO, RS, RU, SC, SD, SE, SG, SK, SL, SM, SV, SY, TJ, TM, TN, TR, TT, TZ, UA, UG, US, UZ, VC, VN, ZA, ZM, ZW

(84) **Designated States** *(unless otherwise indicated, for every kind of regional protection available):* ARIPO (BW, GH, GM, KE, LS, MW, MZ, NA, SD, SL, SZ, TZ, UG, ZM, ZW), Eurasian (AM, AZ, BY, KG, KZ, MD, RU, TJ, TM), European (AT, BE, BG, CH, CY, CZ, DE, **DK,** EE, ES, FI, FR, GB, GR, HU, IE, **IS, IT,** LT, LU, LV, MC, NL, PL, PT, **RO,** SE, **SI,** SK, TR), OAPI (BF, **BJ,** CF, CG, CI, CM, GA, GN, GQ, GW, ML, **MR,** NE, SN, TD, TG).

Published:
— *with international search report*

For two-letter codes and other abbreviations, refer to the "Guidance Notes on Codes and Abbreviations" appearing at the beginning of each regular issue of the PCT Gazette.

(54) Title: REMOTE CONTROLLED PAN-TILT-ANGLE DEVICE FOR SUPPORTING AND EXACT POSITIONING OF OPTICAL EQUIPMENT

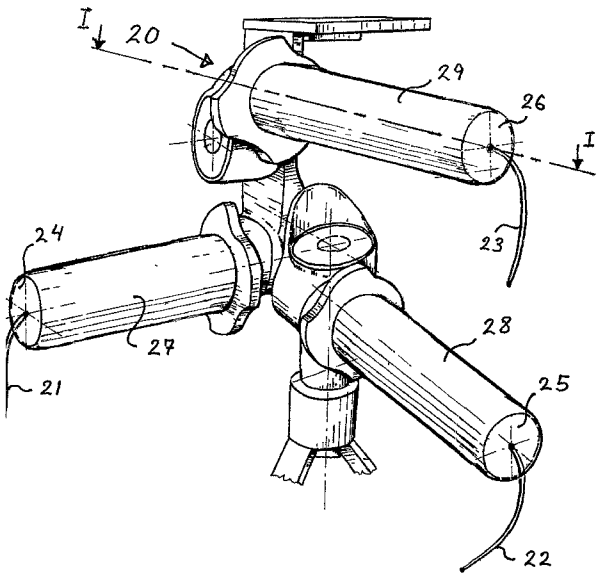

(57) Abstract: A pan-tilt-angle support device allowing fully remote contro of any equipment is provided, giving the photographer o operator the opportunity to adjust the device's pan-tilt- angles about three-axes (x, y, z) for optimum performance fro a remote location by relative rotational precision adjustment about the appropriate axis (x, y, z) by an electric servo o step motor (30) connected to each articulated joint (4, 5, 6) . The interface to the operator could be a remote located devic with a control arrangement similar to a joystick, a hand hel remote control, a PC keyboard or the like, which operates an controls the pan- tilt -angle axis position of the equipment, e.g. an SLR camera, through either electrical wire connectio (21, 22, 23) or through other electrical or radio wave means.

WO 2007/095950 A1

REMOTE CONTROLLED PAN-TILT-ANGLE DEVICE FOR SUPPORTING AND EXACT POSITIONING OF OPTICAL EQUIPMENT

Description

FIELD OF THE INVENTION

The present invention relates to a pan-tilt-angle device for supporting and exact positioning of an optical equipment, in particular photographic, projector and/or light source equipments, relative to a system of axes and comprising an articulated joint for each axis, each articulated joint including first and second joint elements, which can be coupled to each other by a coupling means for relative rotational precision adjustments about the appropriate axis and can be clamped selectively in a selected angular position relative to said appropriate axis.

The modern photographers are using still picture cameras or motion picture cameras for various applications. The picture cameras are available from a great number of different suppliers, but all modern photos are based on the classic 24 x 36 mm celluloid film format. The films are typically available as rolls with 24 or 36 shots to be mounted inside the camera house. Recently the celluloid film rolls have met huge competition from digitally cameras.

The SLR (Single Lens Reflex) camera is based on several individual devices, which assembled fulfill the expectation from the advanced user. Devices such as the camera house, exchangeable lenses, flash lights, distance sensor for night application, possible a tri-pod (a three leg mechanical support device) and a number of different other accessories are commercial available in orcfer to obtain further advantages. The latest digital SLR cameras offer extremely high resolution and picture quality.

The motion picture digital cameras for highly professional purposes are very expensive, but relatively low cost cameras for amateurs or semi professional

photographers are also available. None, however, offer very high digital resolution or picture quality.

All modern hand held still picture and motion picture cameras do always require a person behind the viewfinder to assure the correct scene is shot. Preferably the relatively heavy camera equipment (2-5 kilo) is mounted on a tripod for more clear and in particular sharp images. Adjusting a tripod legs is tedious and not the preferred method of fine adjustment of the preferred images seen in the viewfinder of the camera. A manually operated so called pan-tilt head, also called a panorama head, is preferably mounted between the camera and the tripod allowing the photographer to perform angular and rotational fine adjustments of the lens and camera position for the preferred image composition.

The picture is again relying on the cameraman behind the viewfinder for adjustment of the camera in order to get the desired pictures or shots.

Remote controls for the SLR camera are only known as manually operated and limited to a handheld device typically connected with some sort of a wire to the camera for controlling the cameras shutter function only. No semi-professional and reasonable low cost equipment for controlling the pan-tilt head are commercial available or described in the literature for the professional SLR camera market.

BACKGROUND OF THE INVENTION

The present invention is concerned with an ad-on electromechanical device to existing pure manually operated pan-tilt camera heads allowing the cameraman to adjust the camera's lens position / pan-tilt axis from a remote location.

The pan-tilt functions are well known from the surveillance camera industry where digitally video cameras are integrated with a device to turn the camera

around and up and down by electrically means. All the surveillance cameras available lack the very high picture quality the latest digital SLR cameras can offer and do not allow the very important possibility of exchanging lenses in order to get the desired scene. Such devices are among others offered from the company Axis Communication located in Sweden.

In general very few motorized TriPods are available globally and only for telescopes like those from the Canadian Pacific Telescope Corp. designed for compensation of the earth rotation during long exposure. Or Meade Instrument Corp. in the USA offers telescopes built onto a heavy-duty tripod with motors for automatic pre-selection of planet or star positions in the universe. None is designed for remote control or implementation of such as the SLR or video cameras.

The Soligor company in Germany and the Bescor company in China offer both a small, low cost and electrically driven, non servo but DC (Direct Current) motor powered panner for two-axis, remote controlled from short distance through electric wire of the position. Both individual pieces of equipment are designed for small video cameras and have low weight capacity (maximum 2 kilo theoretically), which does not allow the required steady use for heavy SLR cameras with weight above 2 kilo. The low instability and some shaking and vibration give unclear photos and reduced pan/tilt motion. Also, these devices do not rely on articulated joints for high mechanical stability and simplicity in the manufacturing.

Peace River Studio Company in the USA offer the PixOrb system which is a two-axis step motor driven, wire remote controlled setup, load capacity of 10 kilo, extremely bulky (system weight of 15 kilo) and not practical to use or available at reasonable cost for the SLR camera market. In one case photos have also been published on the Internet with the PixOrb contraption mounted on top of a Manfrotto type 410 gear head indicating that adding a simple motor drive to the existing Manfrotto gear head has never been suggested before.

For the top professional motion picture film and broadcast industry one motor driven pan-tilt option are available, viz the British Mo-Sys Lambda head, which is a very large system having a load capacity of +30 kilo, system weight starting at 21 kilo, offered at extremely high cost, involving considerable complexity, designed exclusively for the 35 mm motion picture industry and thus far from relevant to the professional SLR camera photographer. No Personal Computer interface is offered.

The Dutch company Cambo Bv offers a video boom with no electronics and fully control mechanically of two-axis through Boden cables with a maximum distance of 4 meters to the cameraman. No horizon control is offered.

The Camera Turret Company Inc. in the United States of America offer commercially a simple low-tech homemade version of the British Mo-Sys two-axis pan/tilt head concept for the motion picture industry based on video cameras, which is bulky like the PixOrb and far from relevant for the SLR type of camera. A joystick interface is offered, but no Personal Computer interface is described.

The US based company MicroDolly offers a portable gear head with capacity up to 18 kilo including no electronics and fully controlled mechanically two-axis operation through Boden cables with a maximum distance of 4 meters to the cameraman.

In US patent 5,589,903 the Italian company Manfrotto describes a "three-axis panorama head for optical equipment particularly for photographic equipment". This panorama head for optical equipment is designed for positioning the equipment precisely relative to a system of axes, comprising an articulated joint for each axis, each articulated joint including first and second joint elements which are coupled with one another for rotation about the corresponding axis and can be clamped selectively in a pre-selected angular position relative to said

corresponding axis, wherein at least one of the articulated joints comprises a kinematic reduction coupling with first and second coupling elements which are fixed to the first and second joint elements, respectively, during rotation about the corresponding axis and can be moved between a position of mutual coupling for precision adjustments and a position of mutual disengagement for quick positioning. - The patent does not, however, mention or describe any features involving a motor drive or remote control of the panorama head. The commercially available products from Manfrotto are in one product type very similar to the front-page drawing of the patent, but for low system weight (approximately 1.5 kilo for the type 410), at very competitive cost for manually or hand drive action only. The current three different commercial available panorama head products (type 400, 405, 410) from Manfrotto are all of a very stable and well-produced construction with maximum load capacity ranging from 5-10 kilo, but none are provided with a motor drive or remote control of the panorama head.

No other literature describes any motor drive function to the three-axis Manfrotto or competitive manufactures gear heads for the photographic equipment market.

All the surveillance industry pan-tilt gear heads are only two-axis, which suffer from the drawback that it is not possible to adjust the horizon of the camera view with only two-axis from remote location.

No literature describes a motor driven ceiling, trusses mounted or wall mount for adjusting projectors from a remote location.

Therefore, the sphere, within which the cameraman can "work" today, is limited by the fact that the cameraman needs to be present behind the viewfinder on the camera house and for manually adjustment of the pan-tilt head function.

The present invention is addressing the problem that no high quality motor driven and remote controlled pan-tilt device is available at reasonable cost as an

independent or ad-on contraption to a mechanical stable three-axis pan-tilt-angle/gear head. Also no remote controlled pan-tilt-angle head of high mechanical stability at affordable cost is available for the semi- and professional SLR camera market.

The present invention allows the photographer to adjust and continuously adjust the pan and/or tilt function from a remote location via electrical control devices. The present invention does also concern the provision of ad-on electro¬ mechanical devices to other brands of pure manually operated pan-tilt heads allowing the cameraman to adjust the camera position from a remote location.

SUMMARY OF THE INVENTION

This is obtained by the invention by means of a pan-tilt-angle device for supporting and exact positioning of an optical equipment, in particular photographic, projector and/or light source equipments, relative to a system of axes and comprising an articulated joint for each axis, each articulated joint including first and second joint elements, which can be coupled to each other by a coupling means for relative rotational precision adjustments about the appropriate axis and can be clamped selectively in a selected angular position relative to said appropriate axis, characterised in that said relative rotational precision adjustments about the appropriate axis are provided by an electric servo or step motor connected to one of said first and second joint elements and being remote controllable.

The pan-tilt-angle device can be combined with the more expensive digital SLR cameras offering computer connection to the camera house for immediately download of the photos taken to the PC. After viewing the photo on the PC the cameraman may adjust the pan-tilt-angle axis from the remotely located PC and hereby on-line optimizing the image composition without being present direct behind the camera.

Also stage technicians setting up projectors for presentation of movies and games on stages or in conference rooms will benefit from this invention. Often access to the ceiling or aluminum trusses is both dangerous and strenuous or impossible. The adjustable position by a remotely controlled motor driven device will allow simple and fast adjustment. Also projectors or light sources mounted on the pan-tilt-angle device of the present invention will be able to track persons or devices on a stage for entertainment not seen before.

A projector is a device that integrates a light source, an optic system, electronics and display(s) for the purpose of projecting an image from a computer or video device onto a wall or screen for large image viewing. These devices are attached to a computer or video device as one would connect a monitor or television

The embodiments defined in the attached depending claims concern preferred and advantageous features of the pan-tilt-angle device of the present invention, which will be further described in the detailed part of this description.

BRIEF DESCRIPTION OF THE DRAWINGS

The present invention will become clearer and better understood from the following detailed description of a preferred embodiment thereof and the accompanying drawing, in which:

FIG. 1 is a perspective view of a panorama head having the features disclosed in US-A-5,389,903,

FIG. 2 is a perspective view of a pan-tilt-angle device according to the present invention,

FIG. 3 is a longitudinal section taken along the linel-l in Fig. 2, and

FIG. 4 is a photographic picture of a pan-tilt-angle device according to the present invention.

DETAILED DESCRIPTION OF THE INVENTION

Figure 1 shows a manually operated prior art panorama three-axis gear head as disclosed in e.g. US patent 5,589,903 and having three articulated joints. A panorama head, generally indicated 1, serves for the orientation in space relative to a tripod or other support, generally indicated 3, of a plate 2 for supporting optical and photographic equipment.

The head 1 comprises three articulated joints 4, 5 and 6. Each articulated joint comprises a first joint element 4a, 5a, 6a and a second joint element 4b, 5b, 6b, coupled respectively to one another for rotation about a corresponding axis X, Y, or Z. The axes X, Y, Z are substantially perpendicular to one another and define a system of axes relative to which the plate 2 can be oriented.

Three manually operated rubber coated aluminum handle grips 7,8,9 are mounted on combined drive shanks 32 and worm screws 33 (shown in Fig. 3 only) secured on spindles which drive the rotation of a corresponding gear wheel 34 through a 1:50 gear ratio. Each drive shank is supported rotatably in a bearing bush 36 fabricated from black plastic. The plastic bearing bush 36 is secured into a cast aluminum articulated joint housing 35 with an M20x1.5 (mm) thread arrangement 37. Each drive shank 32 is located out of the centre line of the bearing bush 36 so rotation of the bush causes disengagement of the mesh between the worm screw 33 and the gear wheel 34 thus giving the cameraman opportunity for quick position adjustment by manually turning the protruding lobe shaped operating handle 10, 11, 12 attached to the bush 36. Each handle is spring loaded so as only having a limited degree to turn with increasing resistance and that release of the lobe shaped operating handle will again automatically mesh the worm screw with its corresponding gear. The vertical panorama axis may be free to operate unlimited. The tilt and angle axes have typically a 90 degree of free rotation.

Figure 2 shows a pan-tilt-angle device 20 according to the present invention. The device has the same general construction as the panorama three-axis gear head shown in Fig. 1, but instead of manually operated rubber coated aluminum handle grips 7,8,9 three servo or step motor units 27, 28, 29 are attached to the combined drive shanks and worm screws for driving corresponding gears in the articulated joints. Electrical control wires 21, 22, 23 extend from each servo motor passing out of its rear end cover 24, 25, 26. Each servo motor and appurtenant internal gear box is encapsulated in a thin wall aluminum tube which has an outer diameter of about 22-42 mm, preferably about 32 mm, with a total length of about 60-120 mm, preferably about 80 mm, and a gear ratio for the attached internal planetary gearbox assembly of about 1:50 to 1:200, preferably about 1:100. The original 8 mm diameter brass drive shanks has been drilled out to form an internal bore of a diameter suitable for fitting to the servo motor's 5 mm drive shaft which is secured into the bore with Loctite glue. The servo gear housing is bolted onto the appropriate grip appendage with four M4 screws.

Figure 3 shows a longitudinal section along the line I-I in Fig. 2 through a DC servo or step motor 30 attached to its planetary gear assembly 31 to form the motor unit 29, the drive shaft of which is secured directly into the input spindle 32 of the small diameter worm screw 33. The helix of the worm screw 33 is further meshed with the teeth of the larger diameter gear wheel 34, which is secured to a joint element (6b in Fig. 1) so that rotation of the servo motor's drive shaft will cause rotation of the joint element (6b) about the Z-axis in a total gear ratio of from 1:2500 to 1:10000, preferably about 1:5000. Both the worm screw 33 and the gear wheel 34 are accommodated in an integrated housing 35, an extension of which constitutes the second joint element (6b in Fig. 1), which bears the support plate (2 in Fig. 1) for an optical instrument, e.g. a camera. The casing of the motor unit 29 is secured to the protruding operating handle 12, which thus acts as both bearing and mechanical support for the servo motor and gear assembly 29. The handle appendage 12 is fabricated from plastic or metal and has an external M20x1.5 (mm) thread. The complete drive assembly is mounted in a 90 degree angle to the articulated joint rotating axis via an internal M20x1.5

(mm) thread in the gear housing 35. The servo motor drive shaft axis is located out of the centre line of the bearing bush 36 so that rotation of the spring loaded handle appendage 12 allows the cameraman to give quick position adjustment manually. The gear motor device is assembled from a DC motor coupled directly to a planetary gearbox with a Hall sensor encoder in the opposite end.

Combining a commercial available low-cost gear head or pan-tilt-angle head product with a set of the new accessories into the new product will allow fully remote control of any photographic equipment or other optical instruments in the weight range of 0-15 kilo, giving the photographer the opportunity from a remote location to adjust the camera pan-tilt-angle angles for obtaining optimum photos.

The interface to the cameraman could be a remote located device with a control arrangement similar to a joystick, a hand held remote control, a PC keyboard or the like, which operates and control the pan-tilt-angle axis position of the SLR camera either through electrical wire connection or through other electrical or radio wave means. The control communication may be transmitted by IR waves, ultrasonic waves, or wireless radio wave, or by wire connection allowing the user to operate the pan-tilt-angle device remotely.

For the Manfrotto panorama head type 405 or 410 exchanging the rubber covered hand wheel arrangements 7, 8, 9 with a suitable sized DC gear motor performs the conversion from manual operation to electrical operation.

A DC servo motor type IG-32GM from Transmotec in Sweden with build-in planetary gear can be connected directly to the small diameter worm gear spindle. The bearing and mechanical support for the gear motor and worm spindle with bearing arrangements/bush is fabricated from a suitable material like aluminum with a 20 mm thread. The gear motor device is assembled from a 12-volt 4-watt output direct current brush motor with 32 mm diameter coupled directly to a planetary gearbox with a gear ratio of 1:100 and diameter of 32 mm for high torque capacity in the range of 5 kg/cm. At the opposite end of the DC

motor a Hall effect rotation pickup/encoder is mounted for speed control and/or positioning purposes.

On each articulated joint a high power and ultra small permanent magnet being about 5 mm in diameter and 5 mm long is mounted on the rotating part in connection with the large gear wheel. Two mini size magnetic operated relays from Hermetic Switch are located on the stationary part of the articulated joint to pick up the position of the magnet when ever the gear wheel reach either of its two rotational end positions. Each magnet relay gives signal to the control device in order to avoid mechanical damage of the system the articulated joint rotational end stop is encountered.

Each motor is controlled by an electronic control device, which individually allows acceleration, deceleration, speed control and location of end stops among other features. Such a device include preferably a small micro-computer based on the Phillips invented I2C principle like the FMod-I2C DCMOT control system offered by the Swiss company FiveCo or the German company Conrad. The device could be based on a communication board connected via wires to a series of motor drive boards and with a software protocol allowing the user to control the pan-tilt-angle head function remote via the Internet.

Alternatively the DC motor control device could be based on simple relays for on/off operation with acceptance of rotation end stops all powered by 12 volt DC. Furthermore DC motors may be controlled by a high frequency shifting device generating a pulsating DC power source. The inertia of the rotor is large so the motor will rotate continuously with speed and torques corresponding the energy contained in the sum of the pulses. The DC motor's nominal supply voltage is typically in the range of 12 - 24 volt. To control its speed, it is sourced through a FET from a 12 - 24 volt power source. The FET (Field Effect Transistor) is controlled by a PWM (Pulse Width Modulated) output from a microcontroller. The duty cycle of the PWM can be set with a granularity of e.g. 1/1024, so the

amount of power fed to the motor and hence the speed of the motor can be controlled effectively with very high precision.

Also the gear head drive motor control could be based on step-motors performing the action.

Alternatively, with an advanced micro-computer control it is possible to constantly measure the power consumption of each motor drive. When one drive reaches the articulated joint rotational end stop the power consumption will increase to a power increase ramp versus time. Such information will give the micro-computer control information about the physical end stop. At the same time and only possible to rotate in the opposite direction the Hall sensor input to the micro-computer control will allow the micro-computer to count the steps to the opposite rotational end stop. Appropriate software will establish the operation between the two mechanical end stops. Hereby the micro-computer control has estimated the free angle to operate within.

The Manfrotto model 400 gear head is of a larger, stronger and heavier construction designed for carrying heavier load. The principle of exchanging the handle grips with gear motors are the same, but in practice slightly different and there is a need for larger and stronger motor/gear drive units. Such gear motors are known in the industry as 12 or 24 VDC automobile windscreen angle-drive units like those from German manufacturer Bosch.

When the modern SLR camera today is used to its intended purpose the camera and orientation cannot be controlled in any direction without the cameraman being present behind the camera. With the presented low cost high quality fully remote controlled camera accessories such constrains are fully eliminated.

The broadly used tripod (a three leg photographic equipment support device) for secure location of the camera is all today typically of a 1-1 .5 meter high. Based on the present invention such tripods could preferably be equipped with the

invented motorized pan-tilt-angle head for remote control. Other manually three-axis operated pan-tilt-angle gear heads may be used for the conversion according to the present invention.

Obviously, persons skilled in the art may perform endless variations over the theme described above, all of which, however, are intended to fall within the scope of the invention as defined in the appended claims.

CLAIMS:

1. A pan-tilt-angle device for supporting and exact positioning of an optical equipment, in particular photographic, projector and/or light source equipments, relative to a system of axes and comprising an articulated joint for each axis, each articulated joint including first and second joint elements, which can be coupled to each other by a coupling means for relative rotational precision adjustments about the appropriate axis and can be clamped selectively in a selected angular position relative to said appropriate axis, characterised in that said relative rotational precision adjustments about the appropriate axis are provided by an electric servo or step motor connected to one of said first and second joint elements and being remote controllable.

2. A pan-tilt-angle device according to claim 1, wherein said electric motor is controlled by means of electrical communication through an electronic control device allowing the user to operate the pan-tilt-angle device remotely.

3. A pan-tilt-angle device according to claim 2, wherein said communication is effected through a PC, a MAC, a PDA, a microcontroller device or other remote controlling device.

4. A pan-tilt-angle device according to any of the preceding claims, wherein said coupling means is a worm-screw reduction gear arrangement.

5. A pan-tilt-angle device according to claim 4, wherein the worm screw is mechanical connected to the electric servo or step motor.

6. A pan-tilt-angle device according to claims 4 or 5, wherein said first joint element comprises a driven shaft and a gear, the gear constituting a first coupling element, and said second joint element comprises a shell and a worm screw, the worm screw being supported rotatably in the shell and constituting a

second coupling element, which can be meshed with the gear for relative rotational precision adjustments about the appropriate axis.

7. A pan-tilt-angle device according to claim 6, wherein said first and second coupling elements can be disengaged for quick rotational positioning about the appropriate axis by the interposition of means for moving the worm screw relative to the gear between mutual coupling and disengagement positions.

8. A pan-tilt-angle device according to claim 7, wherein the means for moving the worm screw comprises a bush supported in the shell for rotation about a first axis perpendicular to the articulation axis, the worm screw being supported for rotation in the bush about a second axis parallel to and spaced from the first axis.

9. A pan-tilt-angle device according to claim 8, wherein the bush is threaded externally and is engaged in a threaded seat of the shell so as to be able to rotate in the seat and restrained axially therein.

10. A pan-tilt-angle device according to claim 9, further comprising means for resiliency biasing the bush towards the position of mutual coupling between the worm screw and the gear.

11. A pan-tilt-angle device according to any of the claims 8-10, wherein the bush has an operating handle grip protruding from the outside of the shell.

12. A pan-tilt-angle device according to any of the claims 8-11, wherein the bush is of plastic or metallic material.

13. A pan-tilt-angle device according to any of the claims 8-12, wherein the first and second axes are substantially equidistant from the appropriate articulation axis in the position of mutual coupling.

14. A pan-tilt-angle device according to any of the claims 6-13, wherein the gear is formed on a sleeve structurally independent of the driven shaft and fixed for rotation on one end thereof.

15. A pan-tilt-angle device according to any of the preceding claims, wherein the device has a load capacity from 1 kilo to 15 kilo.

16. A pan-tilt-angle device according to any of the preceding claims, wherein the device comprises three rotational axes and three appurtenant articulated joints including first and second joint elements, each of which joints being provided with an electric servo or step motor connected to one of said first and second joint elements for relative rotational precision adjustments about the appropriate axis and being remote controllable.

17. A pan-tilt-angle device according to any of the preceding claims, wherein the device supports photovoltaic panels with the purpose of controlling the angle and position of a setup including said photovoltaic panels relative to the sun.

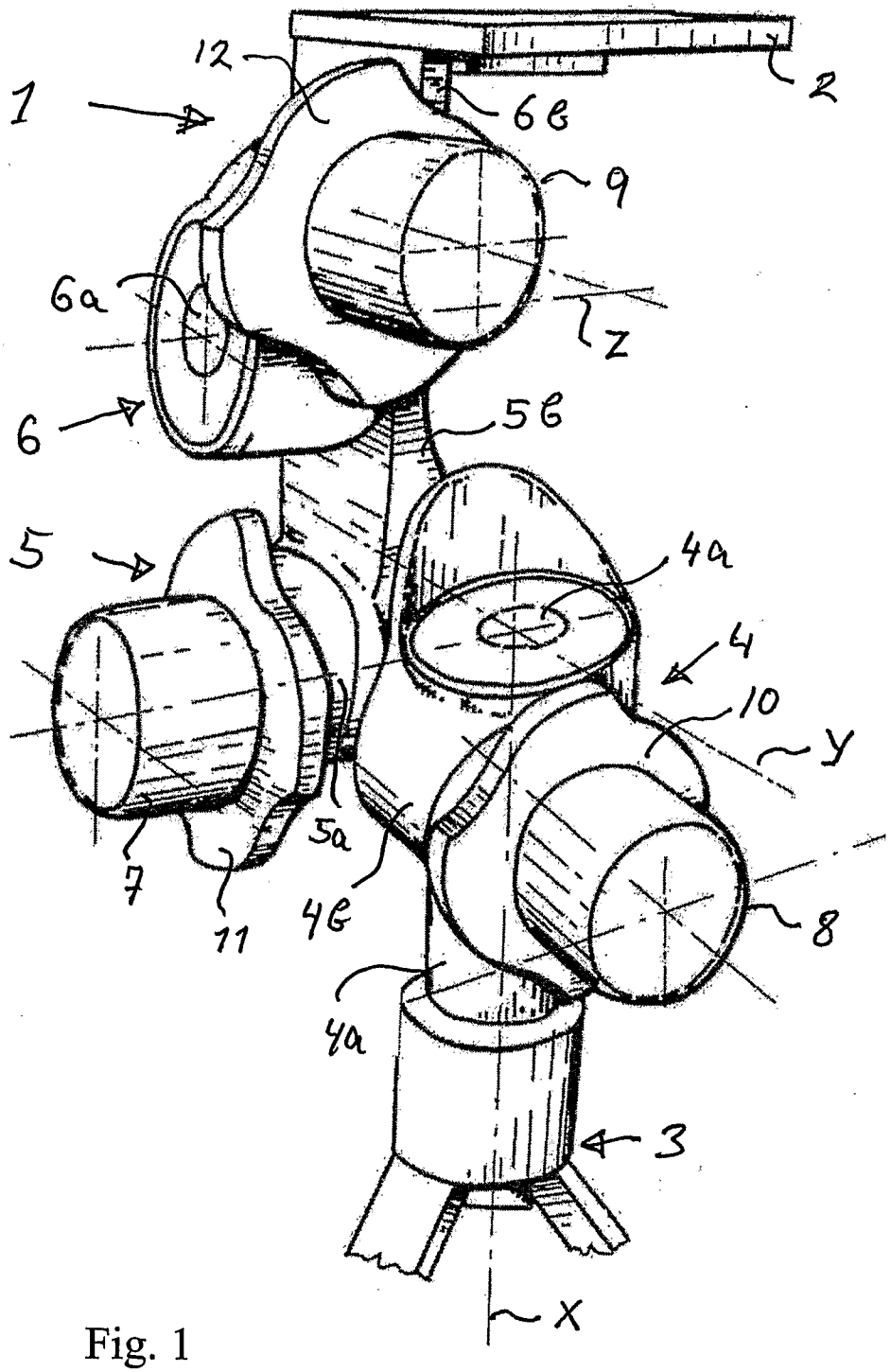

Fig. 1

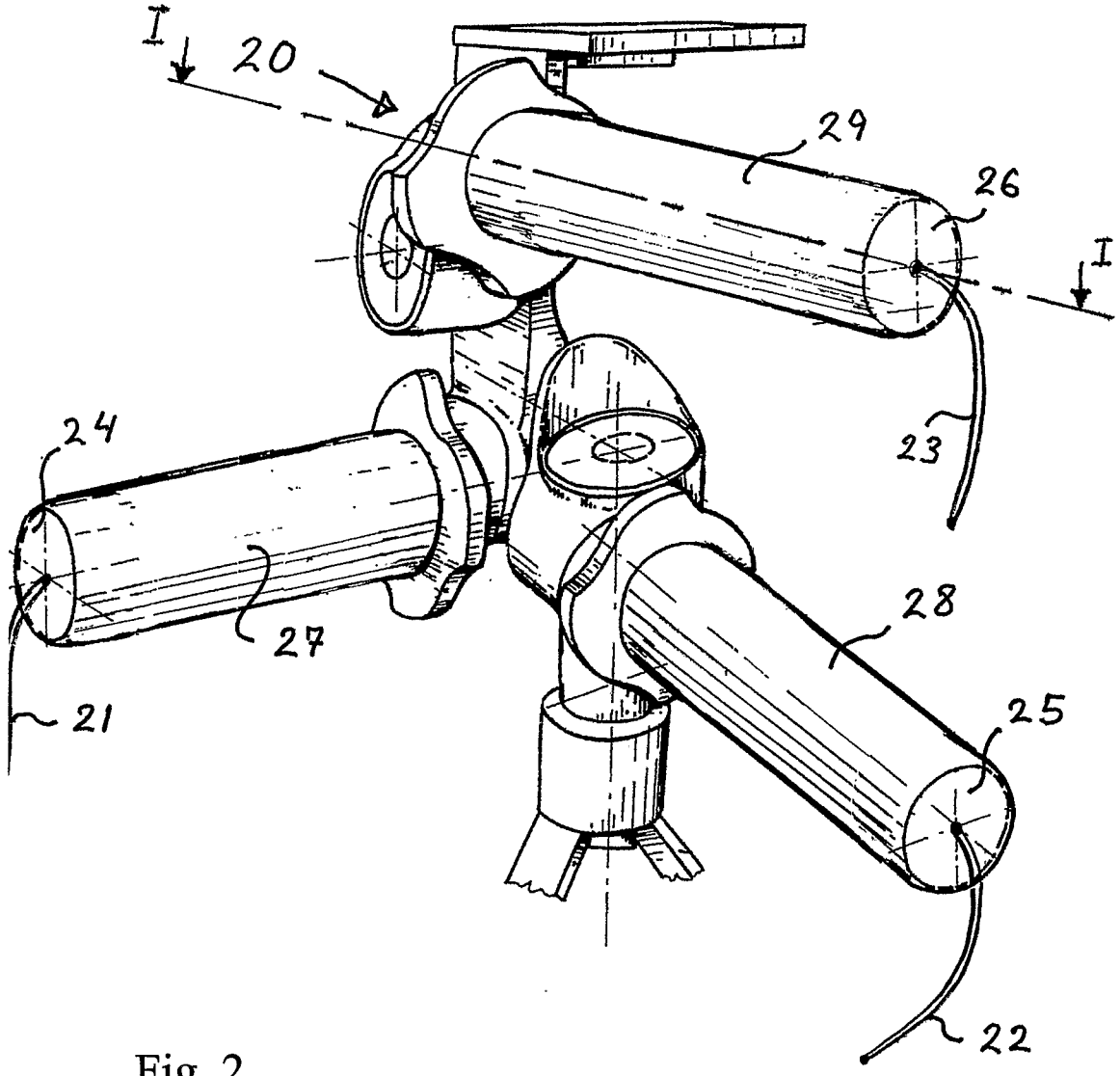

Fig. 2

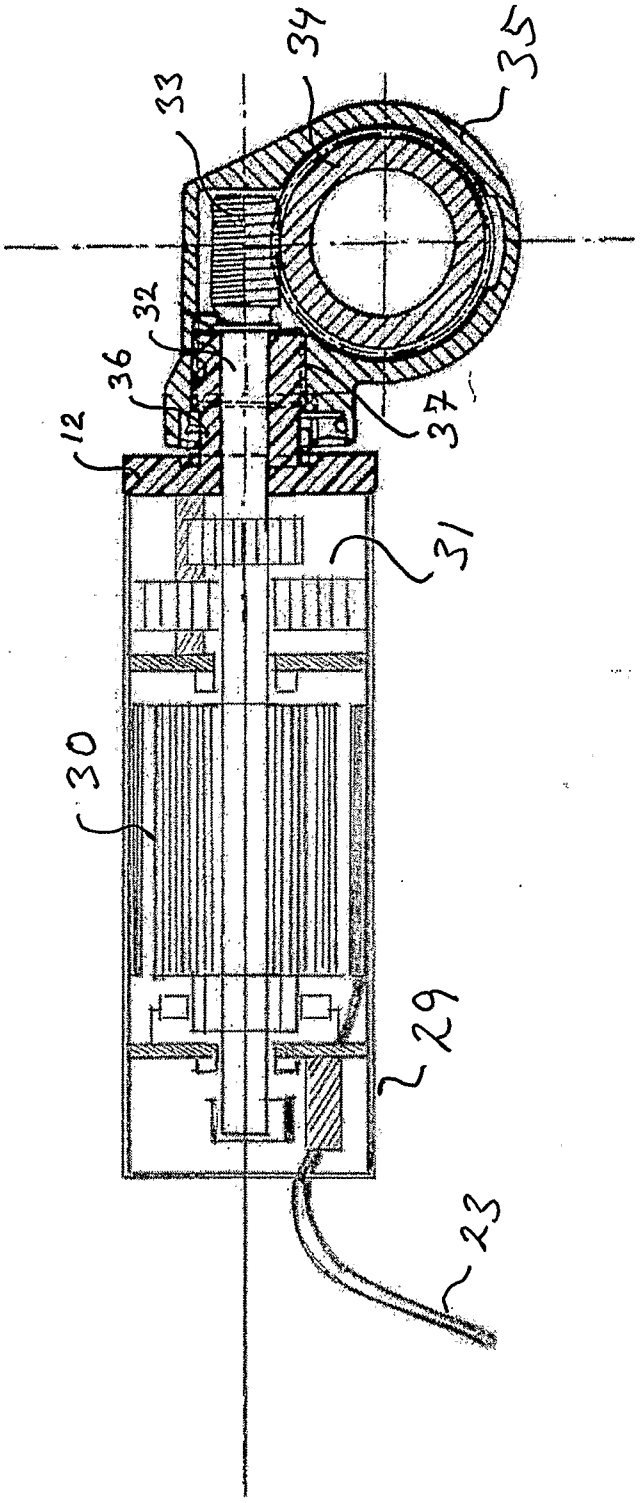

Fig. 3

Fig. 4

INTERNATIONAL SEARCH REPORT

International application No.
PCT/DK2007/000085

A. CLASSIFICATION OF SUBJECT MATTER

IPC: see extra sheet
According to International Patent Classification (IPC) or to both national classification and IPC

B. FIELDS SEARCHED

Minimum documentation searched (classification system followed by classification symbols)

IPC: F16M

Documentation searched other than minimum documentation to the extent that such documents are included in the fields searched

SE, DK, FI , NO classes as above

Electronic data base consulted during the international search (name of data base and, where practicable, search terms used)

EPO-INTERNAL, WPI DATA, PAJ

C. DOCUMENTS CONSIDERED TO BE RELEVANT

Category*	Citation of document, with indication, where appropriate, of the relevant passages	Relevant to claim No.
Y	US 5589903 A (SPEGGIORIN), 31 December 1996 (31.12.1996), whole document --	1-17
Y	US 6608461 Bl (SALAMATI), 19 August 2003 (19.08.2003), column 1, line 56 - line 62; column 4, line 49 - line 56, abstract, figures --	1-17
A	US 5802412 A (KAHN), 1 Sept 1998 (01.09.1998), column 5, line 21 - line ZZ, abstract, figures --	1-17
A	US 6095476 A (MATHIS), 1 August 2000 (01.08.2000), column 4, line 61 - column 5, line 9; column 5, line 20 - line 30, figures --	1-17

[X] Further documents are listed in the continuation of Box C. [X] See patent family annex.

* Special categories of cited documents:

"A" document defining the general state of the art which is not considered to be of particular relevance

"E" earlier application or patent but published on or after the international filing date

"L" document which may throw doubts on priority claim(s) or which is cited to establish the publication date of another citation or other special reason (as specified)

"O" document referring to an oral disclosure, use, exhibition or other means

"P" document published prior to the international filing date but later than the priority date claimed

"T" later document published after the international filing date or priority date and not in conflict with the application but cited to understand the principle or theory underlying the invention

"X" document of particular relevance: the claimed invention cannot he considered novel or cannot be considered to involve an inventive step when the document is taken alone

"Y" document of particular relevance: the claimed invention cannot be considered to involve an inventive step when the document is combined with one or more other such documents, such combination being obvious to a person skilled in the art

"&" document member of the same patent family

Date of the actual completion of the international search	Date of mailing of the international search report
29 May 2007	31-05-2007
Name and mailing address of the ISA/ Swedish Patent Office Box 5055, S-102 42 STOCKHOLM Facsimile No. +46 8 666 02 86	Authorized officer Marianne Dickman / JA A Telephone No. + 46 8 782 25 00

INTERNATIONAL SEARCH REPORT

International application No.
PCT/DK2007/000085

C (Continuation). DOCUMENTS CONSIDERED TO BE RELEVANT

Category*	Citation of document, with indication, where appropriate, of the relevant passages	Relevant to claim No.
A	US 4673268 A (WHEELER ET AL), 16 June 1987 (16.06.1987), figure 5, abstract -- DE 10110814 A1 (THOMA, STEPHAN), 12 Sept 2002 (12.09.2002), figures 1-2, claims 1-5, abstract -- US 5073824 A (VERTIN), 17 December 1991 (17.12.1991), abstract -- --------	1-17 1-17 1-17

International patent classification (IPC)

F16M 11/12 (2006.01)
F16M 11/18 (2006.01)

Download your patent documents at www.prv.se
The cited patent documents can be downloaded at www.prv.se by following the links:

- In English/Searches and advisory services/Cited documents (service in English) or
- e-tjanster/anf δrda dokument (service in Swedish).

Use the application number as username.
The password is **JVXLMVRYZ s** .

Paper copies can be ordered at a cost of 50 SEK per copy from PRV InterPat (telephone number 08-782 28 85) .

Cited literature, if any, will be enclosed in paper form.

US	5589903	A	31/12/1996	**DE**	19521710	A,B	25/01/1996
				GB	2291468	A,B	24/01/1996
				GB	9509552	D	00/00/0000
				IT	234584	Y	09/03/2000
				IT	1268984	B	18/03/1997
				IT	**PD940135**	A,**u>v**	22/01/1996
US	6608461	**Bl**	19/08/2003	**NONE**			
us	5802412	**A**	01/09/1998	US	5463432	A	31/10/1995
us	6095476	A	01/08/2000	**NONE**			
us	4673268	A	16/06/1987	**NONE**			
DE	10110814	Al	12/09/2002	**NONE**			
US	5073824	A	17/12/1991	**NONE**			