(12) INTERNATIONAL APPLICATION PUBLISHED UNDER THE PATENT COOPERATION TREATY (PCT)

(19) World Intellectual Property Organization
International Bureau

(43) International Publication Date
15 November 2012 (15.11.2012)

WIPO | PCT

(10) International Publication Number
WO 2012/154383 A1

(51) International Patent Classification:
G01B 9/02 (2006.01) *G01N 29/24* (2006.01)
G01B 11/06 (2006.01) *A61B 1/00* (2006.01)
G01H 9/00 (2006.01) *B23K 31/12* (2006.01)

(21) International Application Number:
PCT/US2012/034402

(22) International Filing Date:
20 April 2012 (20.04.2012)

(25) Filing Language: English

(26) Publication Language: English

(30) Priority Data:
13/102,654 6 May 2011 (06.05.2011) US

(71) Applicant *(for all designated States except US)*: **HARRIS CORPORATION** [US/US]; 1025 W. NASA Blvd., MS A-11I, Melbourne, Florida 32919 (US).

(72) Inventors: **MONTGOMERY, Robert M.**; 570 Franklyn Avenue, Indialantic, Florida 32903 (US). **CARMEAN, Randy L.**; 1885 Sandy Creek Lane, Malabar, Florida 32950 (US). **MIDDLETON, Charles Franklin, IV**; 1201 Bolle Circle, Rockledge, Florida 32955 (US). **TONTI, James G.**; 3860 Toby Avenue, Malabar, Florida 32950 (US).

(74) Agents: **YATSKO, Michael S.** et al.; Harris Corporation, 1025 W. NASA Blvd., MS A-11I, Melbourne, FL 32919 (US).

(81) Designated States *(unless otherwise indicated, for every kind of national protection available)*: AE, AG, AL, AM, AO, AT, AU, AZ, BA, BB, BG, BH, BR, BW, BY, BZ, CA, CH, CL, CN, CO, CR, CU, CZ, DE, DK, DM, DO, DZ, EC, EE, EG, ES, FI, GB, GD, GE, GH, GM, GT, HN, HR, HU, ID, IL, IN, IS, JP, KE, KG, KM, KN, KP, KR, KZ, LA, LC, LK, LR, LS, LT, LU, LY, MA, MD, ME, MG, MK, MN, MW, MX, MY, MZ, NA, NG, NI, NO, NZ, OM, PE, PG, PH, PL, PT, QA, RO, RS, RU, RW, SC, SD, SE, SG, SK, SL, SM, ST, SV, SY, TH, TJ, TM, TN, TR, TT, TZ, UA, UG, US, UZ, VC, VN, ZA, ZM, ZW.

(84) Designated States *(unless otherwise indicated, for every kind of regional protection available)*: ARIPO (BW, GH,

[Continued on next page]

(54) Title: INTERFEROMETRIC BIOMETRIC SENSING APPARATUS INCLUDING ADJUSTABLE COUPLING AND ASSOCIATED METHODS

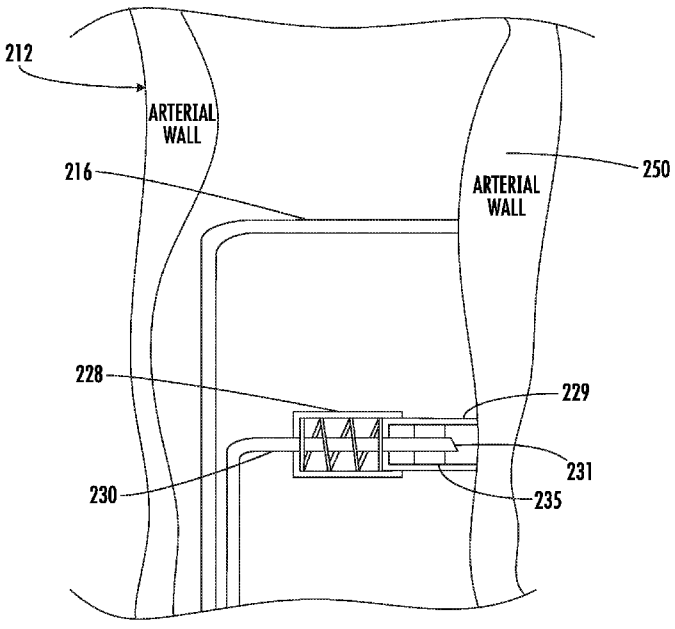

FIG. 8

(57) Abstract: A biological sensing apparatus comprises an excitation source configured to induce waves in a biological target, and an optical waveguide interferometer configured to sense the induced waves in the biological target. The optical waveguide interferometer comprises a probe segment having a probe segment end, and an adjustable coupler configured to permit setting a gap between the probe segment end and the biological target. A controller is coupled to the adjustable coupler and configured to set the gap between the probe segment end and the biological target.

WO 2012/154383 A1

GM, KE, LR, LS, MW, MZ, NA, RW, SD, SL, SZ, TZ, UG, ZM, ZW), Eurasian (AM, AZ, BY, KG, KZ, MD, RU, TJ, TM), European (AL, AT, BE, BG, CH, CY, CZ, DE, DK, EE, ES, FI, FR, GB, GR, HR, HU, IE, IS, IT, LT, LU, LV, MC, MK, MT, NL, NO, PL, PT, RO, RS, SE, SI, SK, SM, TR), OAPI (BF, BJ, CF, CG, CI, CM, GA, GN, GQ, GW, ML, MR, NE, SN, TD, TG).

Published:

— *with international search report (Art. 21(3))*

INTERFEROMETRIC BIOMETRIC SENSING APPARATUS INCLUDING ADJUSTABLE COUPLING AND ASSOCIATED METHODS

The present invention relates to the field of interferometers and, more particularly, to optical waveguide interferometers and related methods.

Ultrasonic waves may be used to probe a variety of materials, particularly for thickness gauging and flaw detection. The ultrasonic waves are typically generated with a piezoelectric transducer. The ultrasonic waves propagate through the material, reflecting from interfaces (in thickness gauging applications), internal features (in flaw detection applications), or surface features. The scattered ultrasonic waves cause the surface of the material to vibrate at the ultrasound frequency. This vibration may be detected with a piezoelectric transducer similar to the one used to generate the ultrasonic waves, and then analyzed to generate data about the material.

Optical detection techniques can be used in place of the piezoelectric transducers to remotely detect the ultrasonic waves. Generally, a laser probe beam is directed onto the material. When the surface vibrates it imparts a phase shift onto the reflected beam. This phase shift is detected with a photodetector after mixing the reflected probe beam with a stable reference beam and measuring the amplitude and frequency or phase of the photodetector output intensity fluctuations. The reference beam originates from the same laser source as the reflected probe beam, and the output signal from the photodetector corresponds to the surface motion.

One problem with laser detection systems is low sensitivity. Typically, the material surface that is being probed has a diffusely reflecting or scattering quality. Consequently, the reflected beam is highly aberrated and its wavefront is mismatched with respect to the reference beam. The resulting signal produced by the photodetector is therefore weak and lacks precision.

In U.S. Pat. No. 6,075,603 to O'Meara, a contactless system for imaging an acoustic source within a workpiece is disclosed. In this system, an array of discrete optical detectors is arranged in a pattern. A probe beam is directed onto a vibrating surface in a pattern that corresponds to the detector array. The probe beam

is reflected onto the detector array and a reference beam is also directed onto the detector array at an angle to the probe beam to produce fringe patterns on the detectors that correspond to the surface vibration pattern. A readout system utilizes the discrete detector outputs to produce an array output signal indicative of at least a size and two dimensional location for the acoustic source relative to the vibrating surface. This system, however, may not provide the desired accuracy, and may be sensitive to fluctuations in the length of the paths between the probe beam and the surface, and the reference beam and the surface.

U.S. Pat. No. 7,262,861 to Pepper discloses a laser ultrasonic inspection apparatus which enables remote sensing of thickness, hardness, temperature and/or internal defect detection. A laser generator impinges on a workpiece with light for generating a thermo-elastic acoustic reaction in a workpiece. A probe laser impinges on the workpiece with an annularly-shaped probe light for interaction with the acoustic signal in the workpiece resulting in a modulated return beam. A photodetector having a sensitive region is used for detecting an annularly-shaped fringe pattern generated by an interaction of a reference signal with the modulated return beam at the sensitive region.

This system, however, may not provide the desired accuracy, and may be sensitive to fluctuations in the length of the path between the probe beam and the surface, or fluctuations in the path lengths of the reference and measurement arms of the interferometer.

In view of the foregoing background, it is therefore an object of the present invention to provide a biological sensing apparatus. This and other objects, features, and advantages in accordance with the present invention are provided by a biological sensing apparatus permitting adjustment of a gap between an interferometer probe and a biological target that includes an excitation source configured to induce waves in a biological target, and an optical waveguide interferometer configured to sense the induced waves in the biological target. The optical waveguide interferometer comprises a probe segment having a probe segment end, and an adjustable coupler configured to permit setting a gap between the probe segment end

and the biological target. A controller is coupled to the adjustable coupler and configured to set the gap between the probe segment and the biological target.

The optical waveguide interferometer may also include a laser source, and a photodetector coupled to the controller. An optical coupler operatively connects the laser source, the photodetector, and the probe segment. The controller is further configured to generate biological target data based upon the sensed induced waves.

Setting the gap between the probe segment and the biological target advantageously allows the optical waveguide interferometer to be tuned such that the distance between the probe segment end and the biological target is a desired fraction or multiple of the wavelength of light emitted from the probe segment end. This helps to minimize distortions in the generated biological target data.

In some applications, the adjustable coupler may comprise a piezoelectric body. Alternatively, the adjustable coupler may comprise a sleeve surrounding the probe segment end and at least one of a heating source and a cooling source associated therewith. In some applications, the heating source may be a laser.

The adjustable coupler comprises a sleeve surrounding the probe segment end. In addition, the adjustable coupler may further comprise a biasing member configured to urge the sleeve in contact with the biological target. The probe end comprises an optical fiber with an angled endface, and the excitation source may comprise at least one pulsed laser.

A method aspect is directed to a method of sensing a biological target comprising inducing waves in the biological target using an excitation source, and sensing the induced waves in the biological target using an optical waveguide interferometer comprising a probe segment end by at least setting a gap between the probe segment end and the biological target.

According to another aspect, a biological sensing apparatus comprises an excitation source configured to induce waves in a biological target, and an optical waveguide interferometer configured to sense the induced waves in the biological target. The optical waveguide interferometer comprises a laser source, and a probe

segment having a probe segment end to be positioned adjacent the biological target and defining a gap therebetween. An optical coupler is operatively connecting the laser source and the probe segment. In addition, a controller is coupled to the laser source and configured to adjust the wavelength of the laser source so that a desired multiple of the wavelength equals the gap between the probe segment end and the biological target.

According to a further aspect, a biological sensing apparatus includes an excitation source configured to induce waves in a biological target, and an optical waveguide interferometer configured to sense the induced waves in the biological target. The optical waveguide interferometer comprises a laser source, and a probe segment having a probe segment end to be positioned adjacent the biological target and defining a gap therebetween. An optical coupler operatively connects the laser source and the probe segment, and a controller is coupled to the laser source and configured to adjust the wavelength of the laser source so that a desired multiple of the wavelength equals the gap between the probe segment end and the biological target.

FIG. 1 is a schematic block diagram of a sensing apparatus, according to the present invention.

FIG. 2 is a schematic sectional view of an adjustable coupler, as used with the sensing apparatus of FIG. 1.

FIG. 3 is a schematic sectional view of another adjustable coupler, such as may be used with the sensing apparatus of FIG. 1.

FIG. 4 is a schematic sectional view of yet another adjustable coupler, such as may be used with the sensing apparatus of FIG. 1.

FIG. 5 is a schematic cross sectional view of an additional adjustable coupler, such as may be used with the sensing apparatus of FIG. 1.

FIG. 6 is a schematic block diagram of another embodiment of a sensing apparatus, according to the present invention.

FIG. 7 is a flowchart of a method of sensing a target in accordance with the present invention.

FIG. 8 is a partial schematic sectional view of an adjustable coupler of a biological sensing apparatus sensing an arterial wall in accordance with the present invention.

FIG. 9 is a partial schematic sectional view of an adjustable coupler of a material inspection apparatus sensing a weld in accordance with the present invention.

Fig. 10 is a schematic block diagram of another sensing apparatus in accordance with the present invention.

FIG. 11 is a schematic block diagram of yet another sensing apparatus in accordance with the present invention.

FIG. 12 is a flowchart of another method of sensing a target in accordance with the present invention.

FIG. 13 is a partial schematic sectional view of a biological sensing apparatus sensing an arterial wall in accordance with the present invention.

FIG. 14 is a partial schematic sectional view of a material inspection apparatus sensing a weld in accordance with the present invention.

The present invention will now be described more fully hereinafter with reference to the accompanying drawings, in which preferred embodiments of the invention are shown. This invention may, however, be embodied in many different forms and should not be construed as limited to the embodiments set forth herein. Rather, these embodiments are provided so that this disclosure will be thorough and complete, and will fully convey the scope of the invention to those skilled in the art. Like numbers refer to like elements throughout, and prime notation and multiple prime are used to indicate similar elements in alternative embodiments.

Referring initially to FIG. 1, a sensing apparatus **10** in accordance with the present invention is now described. The sensing apparatus **10** is used to sense, or determine, a variety of properties of a target **12**, including, for example, the dimensions of the target, the material composition of the target, and the thickness of the target.

The sensing apparatus **10** includes an excitation source **14**, illustratively a pulsed laser, configured to induce ultrasonic waves in the target **12**. The excitation source **14** is an optical source and is illustratively coupled to the target **12** via an optical fiber **15** having an end portion **16** in physical contact with the target, although it should be appreciated that in some embodiments the excitation source is not coupled to the target via an optical fiber but rather radiates the target via free space. The excitation source **14** induces the ultrasonic waves in the target **12** by rapidly heating it. It should be appreciated that in some applications, the excitation source **14** may be a broadband optical source, or a doped fiber amplifier.

An optical waveguide interferometer **17** senses the induced waves and generates target data based thereupon. In particular, the optical waveguide interferometer **17** comprises a probe segment **30** having a probe segment end **31** coupled to the target **12**. The interferometer laser source **18** is connected to an adjustable coupler **14** via optical fibers **21** and through an optical isolator **19** and an optical coupler **22.** Also coupled to the optical coupler **22** is a photo-detector **20**.

The adjustable coupler **24** is in physical contact with the target **12**, and permits setting a gap between the probe segment end **31** and the target. A controller **26** is coupled to the adjustable coupler **24** and is configured to control the adjustable coupler to thereby set the gap between the probe segment end **31** and the target **12**.

Operation of the optical waveguide interferometer **17** is now described. The interferometer laser source **18** radiates the target **12** via the probe segment end **31**. A portion of the light radiating within the probe segment **30** is reflected back as it hits the probe segment end **31,** through the optical coupler **22**, and into the photodetector **20**. Similarly, a portion of the light radiating within the probe segment **30** is radiated from the probe segment end **31** onto the target **12**. This light is then reflected from the target **12** back into the probe segment **30** via the probe segment end **31**, through the optical coupler **22**, and into the photodetector **20**. Consequently, the light reflected from the probe segment end **31** and the light reflected from the target **12** will combine, and the superposition thereof is detected by the photodetector **20**. The light reflected by the target will typically undergo a phase change due to the

ultrasonic waves and resulting vibrations in the target **12**, and therefore will have a different phase than the light reflected by the probe segment end **31**, causing constructive and destructive interference to occur therebetween. This interference therefore reflects a detection of the sensed induced waves and can be analyzed in order to determine various properties of the target, as will be appreciated by those skilled in the art.

The controller **26** generates target data based upon the sensed induced waves. To do so, a laser pulse from the pulsed laser **14** triggers the start of a measurement cycle, performed by the controller **26**, in the time domain. Signal peaks observed by the controller **26** correspond to the transit time of surface waves from the point of excitation (that is, the point of the target **12** on which the pulse from the pulsed laser **14** radiates) to the probe segment end **31**. Since the distance between the excitation point and the probe segment end **31** is known, the acoustic velocity of the ultrasonic waves in the target **12** can be calculated. By comparing this acoustic velocity to a table of acoustic velocity for different materials, the material composition of the target can be determined. It should be understood that the adjustable coupler **24** and excitation source probe **16** can be scanned to different locations on the target **12**, so as to gather information about many points of the target.

The controller **26** may include a processor and a memory cooperating therewith. The memory may be volatile or non-volatile, and the processor may be an integrated circuit, in some applications.

In addition, the controller **26** performs typical interferometric calculations as known to those of skill in the art on the superposition of the light reflected by the probe segment end **31** and the light reflected by the target **12** to potentially determine the dimensions and/or the thickness of the target. Since a difference in the length of the path traveled by the light reflected by the probe segment end **31'** and the light reflected by the target **12** will result in an additional phase difference therebetween, it is desirable for the difference in the length of that path to remain the same. That is, it desirable for the gap between the probe segment end **31** and the target **12** to remain constant, such that the gap is a desired multiple of

the wavelength of the light radiated by, and reflected into, the probe segment end **31'.** The multiple used need not be an integer in some embodiments, and need not be greater than one in some embodiments.

As stated above, the controller **26** controls the adjustable coupler **24** to adjust the gap. As shown in FIG. 2, the adjustable coupler **24,** in some embodiments, may comprise a sleeve **29** surrounding probe segment end **31**, and a biasing member **28** to urge the sleeve **29** in physical contact with the target **12**. The biasing member **28** comprises a cylinder configured to receive the sleeve **29**, and a spring arranged so as to urge the sleeve in contact with the target **12**. A ferrule **35** slidably holds the probe segment end **31** inside the sleeve **29**. The purpose of the biasing member **28** urging the sleeve **19** in contact with the target **12** is to help coarsely adjust the gap between the probe segment end **31** and the target **12** even though the target may be vibrating.

Thermal drifting, however, may cause the sleeve **19**, the probe **30**, and the probe segment end **31** to expand and contract at different rates, which leads to the gap changing. Since this is not desirable, the adjustable coupler **24** may include additional components to fine tune the gap.

For example, as shown in FIG. 3, the adjustable coupler **24'** may include a piezoelectric sleeve **32'** surrounding the probe segment end **32'**, which is in turn surrounded by the sleeve **29'**. The controller **26'** applies a voltage to the piezoelectric sleeve **32'**, causing the piezoelectric sleeve to expand or contract, thereby altering the length of the probe segment end **31'**. This therefore allows fine tuning of the gap between the probe segment end **31'** and the target **12'**. The controller **26'** may be coupled to the piezoelectric sleeve **32'** via any suitable method, such as suitable electrical contacts between the sleeve **19'** and the piezoelectric sleeve **32'**.

Another embodiment of the adjustable coupler **24** is shown in FIG. 4, and includes a temperature control unit **33"** surrounding the sleeve **19"**. The temperature control unit **33"** is illustratively a Peltier effect unit, and is controlled by the controller **26"**. The controller **26"** uses the Peltier effect unit **24"** to heat or cool

the sleeve **19"** and probe segment end **31"** to thereby cause the sleeve **19"** and probe segment end **31"** to expand or contract, which in turn allows fine tuning of the gap between the probe segment end and the target **12"**.

A further embodiment of the adjustable coupler **24** is shown in FIG. 5, and includes a laser heating source **34"'** configured to radiate the sleeve **19"'**, and thereby heat the sleeve **19"'** and probe segment end **31"'** to cause the sleeve and probe segment end to expand or contract, which in turn allows fine tuning of the gap between the probe segment end and the target **12"'.**

Referring once again to FIG. 1, in the above examples, it should be understood the controller **26** controls the adjustable coupler **24** based upon an error signal. This error signal may be the DC component of the light detected by the photodetector **20**, for example.

A further embodiment of the sensing apparatus **110** is shown in FIG. 6. Here, there is no mechanically adjustable coupler, although the excitation source **114**, optical isolator **119**, optical coupler **122**, photodetector **120**, probe segment **130**, probe segment end **131**, and optical fibers **115, 121** are similar to those described above with reference to FIG. 1. Rather than adjusting the gap between the probe segment end **131** and the target **112** such that the gap is a desired multiple of the wavelength of the light radiated by, and reflected into, the probe segment end, the wavelength of the interferometer laser source **118** is adjusted by the controller **126** such that a desired multiple of the wavelength equals the gap.

It should be understood that the sensing apparatuses **10, 10', 10", 10"'**, **100** disclosed above may include an array of excitation sources **14, 14', 14", 14"'**, **114**, and an array of optical waveguide interferometers **18, 18', 18", 18"', 118**.

With additional reference to the flowchart **40** of FIG. 7, a method of sensing a target is now described. After the start (Block **41**), waves are induced in a target by an excitation source (Block **42**). Next, the induced waves are sensed by an optical waveguide interferometer (Block **43**). The optical waveguide interferometer comprises a probe segment having a probe segment end, an adjustable coupler configured to permit setting a gap between the probe segment end and the target.

Next, the method includes setting the gap between the probe segment end and the target using a controller coupled to the adjustable coupler (Block **44**). Then, target data is generated based upon the sensed induces waves, using the controller (Block **45**). Block **46** indicates the end of the method.

It should be understood that the sensing apparatuses **10, 10', 100** disclosed above offer numerous advantages. For example, the use of a pulsed laser **14, 14', 114** as an excitation source allows a wide bandwidth of ultrasonic waves to be induced in the target **12, 12', 112** as opposed to conventional piezoelectric excitation sources which typically produce more narrow bandwidths. For example, the pulsed laser **14, 14', 114** can produce ultrasonic waves with a bandwidth above 1MHz, which is difficult to achieve with conventional piezoelectric excitation sources. In addition, with a piezoelectric excitation source, a physical matching layer of often required to achieve a proper acoustic impedance match between the excitation source and the target. The sensing apparatuses **10, 10', 100** disclosed above do not suffer this drawback and are adaptable to a wide range of target materials by adjusting the interferometer spacing either through tuning of the interferometer laser **18, 18', 118** wavelength, or tuning of the adjustable coupler **24, 24', 124',** as opposed to using a variety of matching layers.

In addition, the ability of the sensing apparatuses **10, 10', 10", 10"'** to either adjust the gap between the probe segment end **31, 31', 31", 31"'** and the target **12, 12', 12", 12"'** or the wavelength of the interferometer laser source **118**, on the fly and based upon a feedback error signal provides for precise results, as effects that negatively impact the results can be adjusted for and mitigated. Furthermore, the use of a pulsed laser **14, 14', 14", 14"', 114** as the excitation source, coupled with the use of the optical waveguide interferometer **17, 17', 17", 17"', 117** allows the sensing apparatus **10, 10', 10", 10"', 110** to be compact and portable. Moreover, the use of optical fibers to couple the pulsed laser **14, 14', 14", 14"', 114** and interferometer laser source **18, 18', 18", 18"', 118** to the target **12, 12', 12", 12"', 112** allows the sensing of hard to reach targets, since the optical fibers may be inserted into small spaces.

The sensing apparatuses **10, 10', 10", 10"', 110** disclosed herein are useful in a wide variety of applications. For example, they may be useful in medical imaging systems, for sensing and imaging body parts. For example, the optical fibers of the pulsed laser **14, 14', 14", 14"', 114** and interferometer laser source **18, 18', 18", 18"', 118** may be inserted into arteries, in order to image those arteries or measure the thickness thereof, or may be inserted into a trachea in order to image various components of the digestive system of a patient. Shown in FIG. 8 is an embodiment where the sensing apparatus **200** (similar to the sensing apparatuses disclosed above) is a biological sensing device, and the target **212** is an artery having an arterial wall **250**. Here, the controller will generate anatomical data about the arterial wall **250**, such as a thickness or density of the arterial wall. Those skilled in the art will appreciate that any biological sample or body part may be sensed using this sensing apparatus **200**.

In addition, the sensing apparatuses **10, 10', 10", 10"', 110** may be used for materials inspection. For example, small welds, or welds in inaccessible places, may be inspected using the sensing apparatuses **10, 10', 10", 10"', 110.** Wire bonds in electronic devices may be inspected using the sensing apparatuses **10, 10', 10", 10"', 110.** Hydraulic lines, such as those used in avionics systems of aircraft, or brake lines of a motor vehicle, may be inspected using the sensing apparatuses **10, 10', 10", 10"', 110.** Shown in FIG. 9 is an embodiment where the sensing apparatus **300** (similar to the sensing apparatuses disclosed above) is a material inspection device, and the target **312** is a workpiece having a weld **350** to be inspected. Here, the controller will generate material data about the material weld **350**, such as a thickness, density, or composition of the weld **350**. Of course, this material inspection device **300** need not be limited to weld inspection and may be used to sense or inspect any sort of workpiece.

It should be understood that the specific use examples given above are by no means limiting, and that those of skill in the art will appreciate that the sensing apparatuses **10, 10', 10", 10"', 110** may be useful in an unlimited number of fields.

Referring to FIG. 10, another embodiment of a sensing apparatus **400** in accordance with the present invention is now described. The sensing apparatus **400** is used to sense, or determine, a variety of properties of a target **402**, including, for example, the dimensions of the target, the material composition of the target, and the thickness of the target.

The sensing apparatus **400** includes an excitation source **404**, illustratively a broadband optical source, configured to induce ultrasonic waves in the target **402**. The excitation source **404** is an optical source and is illustratively coupled to the target **402** via an optical fiber **406** having an end portion **408** in physical contact with the target, although it should be appreciated that in some embodiments the excitation source is not coupled to the target via an optical fiber but rather radiates the target via free space. The excitation source **404** induces the ultrasonic waves in the target **402** by rapidly heating it. It should be appreciated that in some applications, the excitation source **404** may be a coherent optical source (e.g., a pulsed laser), or a doped fiber amplifier. In fact, in some applications, the excitation source **404** may be a pulsed laser having a spectral width that is inversely proportional to the pulse duration.

An optical waveguide interferometer **409** senses the induced waves and generates target data based thereupon. In particular, the optical waveguide interferometer **409** comprises a plurality of optical couplers **416, 414, 422** and interconnecting optical fibers **430a-430e, 432a-432c** arranged to define a reference arm (**430a-430e**) and a measurement arm (**432a-432c**). A probe segment **417** is coupled to portions of the reference arm **430c, 430d** and portions of the measurement arm **432a**. The probe segment **417** has a probe segment end **418** to be positioned adjacent the target **402b.** An optical path length adjustor **420** is coupled to portions of the reference arm **430d, 430e**. The optical path length adjustor **420** is illustratively a piezoelectric body, although it should be understood that any suitable optical path length adjustor or fiber stretcher may also be used.

A reference light source **410** is coupled to the reference arm **430a-430e** and is configured to radiate light into the reference arm, and onto the target **402** via

the probe segment end **418.** The reference light source can be a laser source or doped fiber amplifier, as will be appreciated by those skilled in the art. For example, the reference light source may be a high gain erbium doped fiber amplifier with a 40nm bandwidth, centered around a wavelength of 1550nm.

An optical power detector **412** is coupled to the reference arm **430a-430e** and is configured to receive light from the reference light source **410** reflected by the target **402** into the probe segment end **418**.

The plurality of optical couplers **416, 414, 422** includes a first optical coupler **416** coupling portions of the reference arm **430c, 430d** to portions of the measurement arm **432a** and the probe segment **417**. A second optical coupler **414** couples the first optical coupler **416** to the reference light source **410** and optical power detector **412**. A third optical coupler **422** couples portions of the reference arm **430e** to portions of the measurement arm **432a-432c,** which thereby provides a differential output to the photodetector **424**.

A controller **426** is coupled to the optical path length adjustor **420** and is configured to adjust an optical path length of the reference arm **430a-430e** to maintain a constant relationship with respect to an optical path length of the measurement arm **432a-432c**. The controller **426** may adjust the optical path length of the reference arm **430a-430e** based upon the optical power detector **412** and/or the differential output provided to the photodetector **424**.

Thermal drifting may cause the length of the optical fibers within the reference arm **430a-430e** and the measurement arm **432a-432c** to expand and contract at different rates, which leads to the change of their respective lengths. This is undesirable because it negatively affects the accuracy of the sensing apparatus **400**. The controller **426** helps rectify this undesirable condition by adjusting the path length of the reference arm **430a-430e** using the optical path length adjustor **420**. The matching of the path length of the reference arm **430a-430e** and the measurement arm **432a-432c** by the controller **426** using the optical path length adjustor **420** to within 0.0025in allows particularly accurate results.

Operation of the optical waveguide interferometer **409** is now described. A portion of the light radiated by the reference light source **410** is radiated from the probe segment end **418** onto the target **402.** This light is then reflected from the target **402** back into the probe segment **417** via the probe segment end **418**, through the first optical coupler **416**, through the second optical coupler **414**, and into the optical power detector **412**. The optical power detector **412** measures the optical power reflected from the target **402**, and due to the arrangement of the optical couplers **416, 414, 422**, only the optical power reflected from the target. That is, the optical couplers **416, 414, 422** are arranged such that the light directly emitted by the reference light source **410** does not reach the optical power detector **412**, and only the light reflected from the target **402** reaches the optical power detector.

A portion of the light radiating from the reference light source **410** is conducted through the reference arm **430a-430e** by the arrangement of optical couplers **416, 414, 422** and to the photodetector. Consequently, the light reflected from the target **402** and a portion of the light radiated by the reference light source **410** and conducted through the reference arm **430a-430e** will combine, and the superposition thereof is detected by the photodetector **424**.

The light reflected by the target **402** will typically undergo a phase change due to the ultrasonic waves and resulting vibrations in the target, and therefore will have a different phase than the light radiated by the reference light source **410** and conducted through the reference arm **430a-430e**, causing constructive and destructive interference to occur therebetween. This interference therefore reflects a detection of the sensed induced waves and can be analyzed in order to determine various properties of the target, as will be appreciated by those skilled in the art.

The controller **426** generates target data based upon the sensed induced waves. To do so, a pulse from the excitation source **404** triggers the start of a measurement cycle, performed by the controller **426**, in the time domain. Signal peaks observed by the controller **426** correspond to the transmit time of surface waves from the point of excitation (that is, the point of the target **402** on which the pulse from the excitation source **404** radiates) to the probe segment end **418**. Since the

distance between the excitation point and the probe segment end **418** is known, the acoustic velocity of the ultrasonic waves in the target **402** can be calculated. By comparing this acoustic velocity to a table of acoustic velocity for different materials, the material composition of the target can be determined. It should be understood that the excitation source probe **408** and probe segment end **418** can be scanned to different locations on the target **402**, so as to gather information about many points of the target.

The controller **426** may include a processor and a memory cooperating therewith. The memory may be volatile or non-volatile, and the processor may be an integrated circuit, in some applications.

In addition, the controller **426** performs typical interferometric calculations as known to those of skill in the art on the superposition of the light radiated from the reference light source **410** and directed through the reference arm **430a-430e** and the light reflected by the target **402** to potentially determine the dimensions and/or the thickness of the target.

Since a difference in the length of the path traveled by the light reflected by the probe segment end **418** and the light radiated from the reference light source **410** and directed through the reference arm **430a-430e** will result in an additional phase difference therebetween, it is desirable for the length of the reference arm **430a-430e** and the length of the measurement arm **432a-432c** to remain the same, or at least for a constant relationship between the length of the reference arm and measurement arm to be maintained. If a constant relationship between the length of the reference arm **430a-430e** and the measurement arm **432a-432c** is to be maintained, it is desirable for the difference in length to be a desired multiple of the wavelength of the light radiated by reference light source **410.** The multiple used need not be an integer in some embodiments, and need not be greater than one in some embodiments.

It should be appreciated that the optical path length adjustor **420** need not operate by physically changing a length of an optical fiber in all embodiments. For example, the optical path length adjustor **420** may be an adjustable delay line or

phase modulator which can maintain a constant phase relationship between the light reflected from the target **402** and the light radiated by the reference light source **410** and through the reference arm **430a-430e**. The maintenance of a constant phase relationship between the light in the reference arm **430a-430e** and the measurement arm **432a-432c** also helps to provide accurate results.

In some applications, the reference arm **430a-430e** may even include a free space element. One such embodiment is now described with reference to FIG. 11. Here, the sensing apparatus **500** remains the same as the sensing apparatus **400** of FIG. 10, except that the reference arm **530a-530e** includes a free space element. Here, the free space element is contained within an adjustable lens arrangement **521**. The reference optical fiber **530d** terminates at a coupler on the first side of the adjustable lens arrangement **521**, and radiates reference light via free space and through a first lens **523.** The reference light then passed through a second lens **525**, which focuses the light back into the reference optical fiber **530e** via another coupler. The distance between the first lens **523** and second lens **525** is adjustable based upon input received from the controller **526**. This thereby allows adjustment of the length of the path of the reference arm **530a-530e**.

A method of operating a sensing apparatus is now described with reference to the flowchart **550** of FIG. 12. The sensing apparatus includes an optical waveguide interferometer comprising a plurality of optical couplers and interconnecting optical fibers arranged to define a reference arm, a measurement arm, a probe segment coupled to the reference arm and the measurement arm and having a probe segment end, and an optical path length adjustor coupled to the reference arm.

After the start of the method (Block **551**), the waves are induced in a target using an excitation source (Block **552**). Then, a probe segment end is positioned adjacent the target (Block **553**).

An optical path length of the reference arm is then adjusted via the optical path length adjustor to maintain a constant relationship with respect to an optical path length of the measurement arm, using a controller (Block **554**). The induced waves are then sensed using a photodetector coupled to the controller (Block

555). Target data is then generated based upon the sensed induced waves, using the controller (Block **556**). Block **557** indicates the end of the method.

It should be understood that the sensing apparatuses **400, 500** disclosed above may include an array of excitation sources **404, 504**, and an array of optical waveguide interferometers **409, 509**.

The sensing apparatuses **400, 500** disclosed herein are useful in a wide variety of applications. For example, they may be useful in medical imaging systems, for sensing and imaging body parts. For example, the optical fibers **406, 408, 506, 508** of the excitation source and reference light source **410, 510** may be inserted into arteries, in order to image those arteries or measure the thickness thereof, or may be inserted into a trachea in order to image various components of the digestive system of a patient. Shown in FIG. 13 is an embodiment where the sensing apparatus **600** (similar to the sensing apparatuses **400, 500** disclosed above) is a biological sensing device, and the target is an artery having an arterial wall **650**. Here, the controller will generate anatomical data about the arterial wall **650**, such as a thickness or density of the arterial wall. Those skilled in the art will appreciate that any biological sample or body part may be sensed using this sensing apparatus **600**.

In addition, the sensing apparatuses **400, 500** may be used for materials inspection. For example, small welds, or welds in inaccessible places, may be inspected using the sensing apparatuses **400, 500.** Wire bonds in electronic devices may be inspected using the sensing apparatuses **400, 500.** Hydraulic lines, such as those used in avionics systems of aircraft, or brake lines of a motor vehicle, may be inspected using the sensing apparatuses **400, 500.** Shown in FIG. 14 is an embodiment where the sensing apparatus **700** (similar to the sensing apparatuses disclosed above) is a material inspection device, and the target **702** is a workpiece having a weld **750** to be inspected. Here, the controller will generate material data about the material weld **750**, such as a thickness, density, or composition of the weld **750**. Of course, this material inspection device **700** need not be limited to weld inspection and may be used to sense or inspect any sort of workpiece.

CLAIMS

1. A biological sensing apparatus comprising:

an excitation source configured to induce waves in a biological target;

an optical waveguide interferometer configured to sense the induced waves in the biological target and comprising

a probe segment having a probe segment end,

an adjustable coupler configured to permit setting a gap between the probe segment end and the biological target,

a photodetector, and

a controller coupled to said adjustable coupler and said photodetector, and configured to

set the gap between the probe segment end and the biological target, and

generate biological target data based upon the sensed induced waves.

2. The biological sensing apparatus of Claim 1, wherein said controller generates the biological target data to represent at least one of a thickness and a density of the biological target.

3. The biological sensing apparatus of Claim 1, wherein said optical waveguide interferometer further comprises:

a laser source; and

an optical coupler operatively connecting said laser source, said photodetector, and said probe segment.

4. The biological sensing apparatus of Claim 1, wherein said adjustable coupler comprises a piezoelectric body.

5. The biological sensing apparatus of Claim 1, wherein said adjustable coupler comprises a sleeve surrounding said probe segment end, and at least one of a heating source and a cooling source associated therewith.

6. The biological sensing apparatus of Claim 5, wherein said heating source comprises a laser.

7. The biological sensing apparatus of Claim 1, wherein said adjustable coupler comprises a sleeve surrounding said probe segment end and a biasing member configured to urge said sleeve in contact with the biological target.

8. A method of sensing a biological target comprising:

inducing waves in the biological target using an excitation source;

sensing the induced waves in the biological target, using an optical waveguide interferometer comprising a photodetector and probe segment having a probe segment end by at least

setting a gap between the probe segment end and the biological target using an adjustable coupler, and

generating biological target data based upon the sensed induced waves, using a controller coupled to a photodetector.

9. The method of Claim 8, wherein the biological target data is generated to represent at least one of a density and a thickness of the biological target.

10. The method of Claim 8, wherein setting the gap comprises using a controller coupled to the adjustable coupler to set the gap between the probe segment and the biological target.

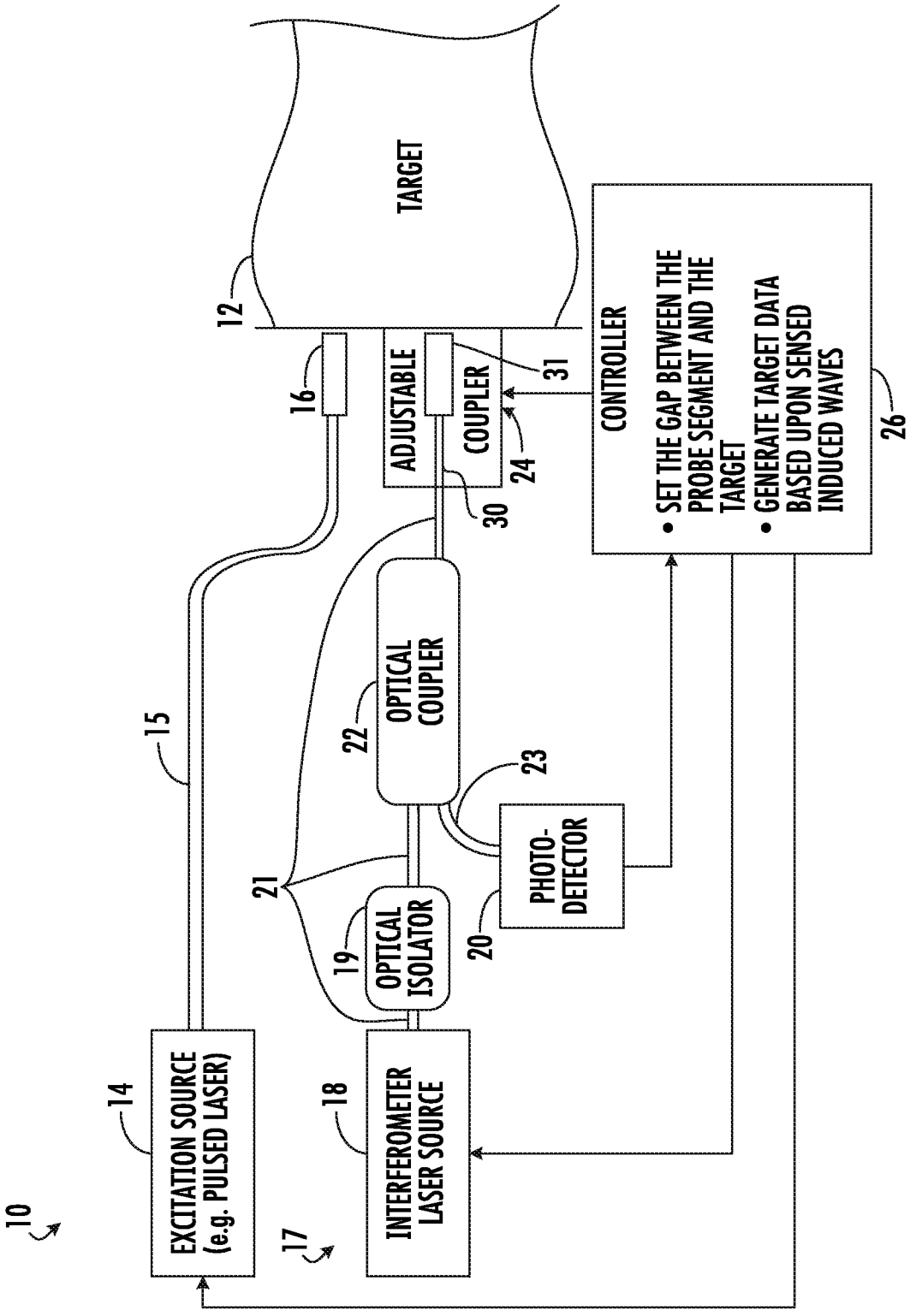
TARGET
12
16
ADJUSTABLE COUPLER
31
24
30
CONTROLLER
• SET THE GAP BETWEEN THE PROBE SEGMENT AND THE TARGET
• GENERATE TARGET DATA BASED UPON SENSED INDUCED WAVES
26
15
22
OPTICAL COUPLER
23
PHOTO-DETECTOR
21
19
OPTICAL ISOLATOR
20
14
EXCITATION SOURCE (e.g. PULSED LASER)
18
INTERFEROMETER LASER SOURCE
10
17

FIG. 1

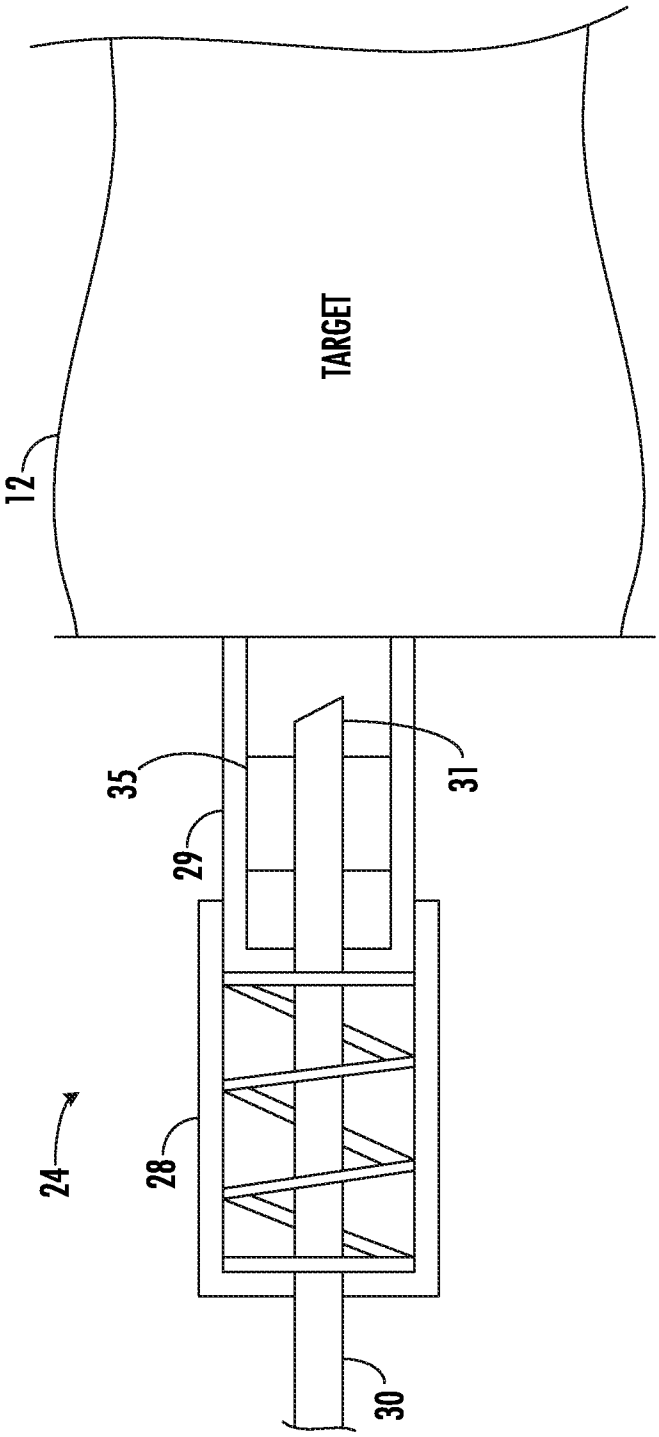

FIG. 2

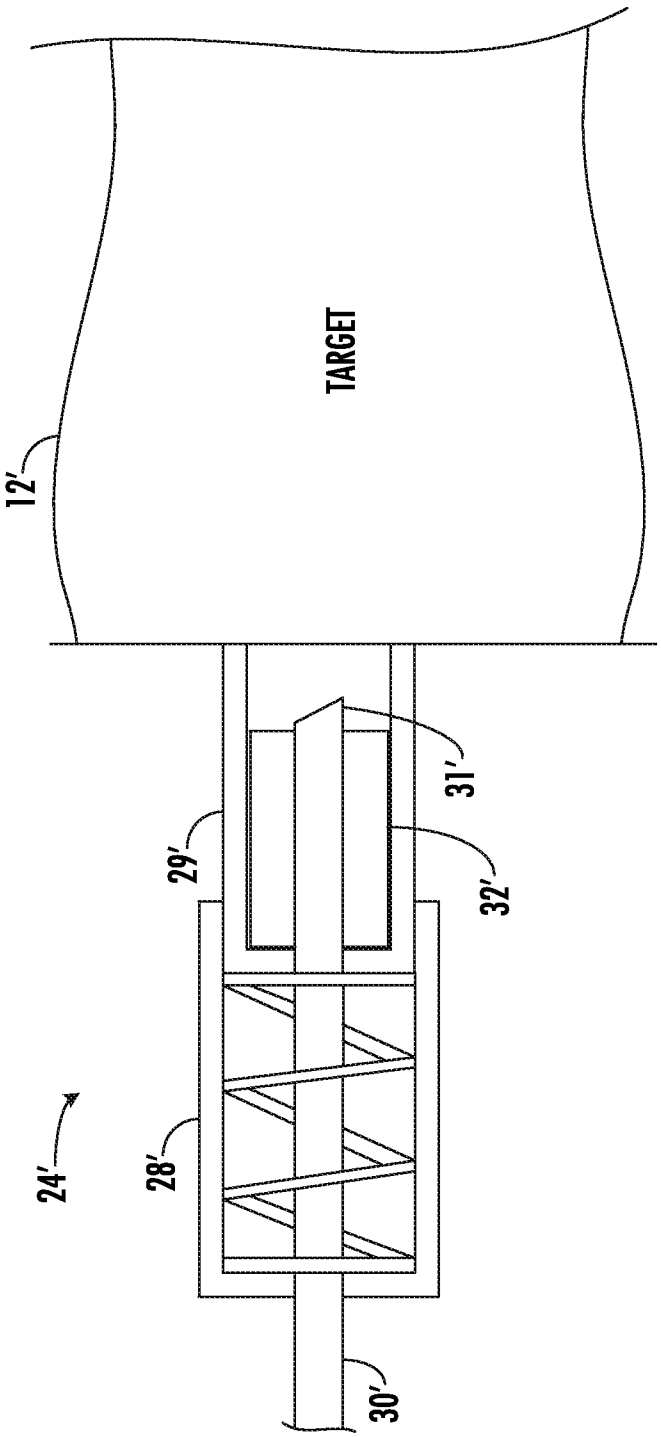

FIG. 3

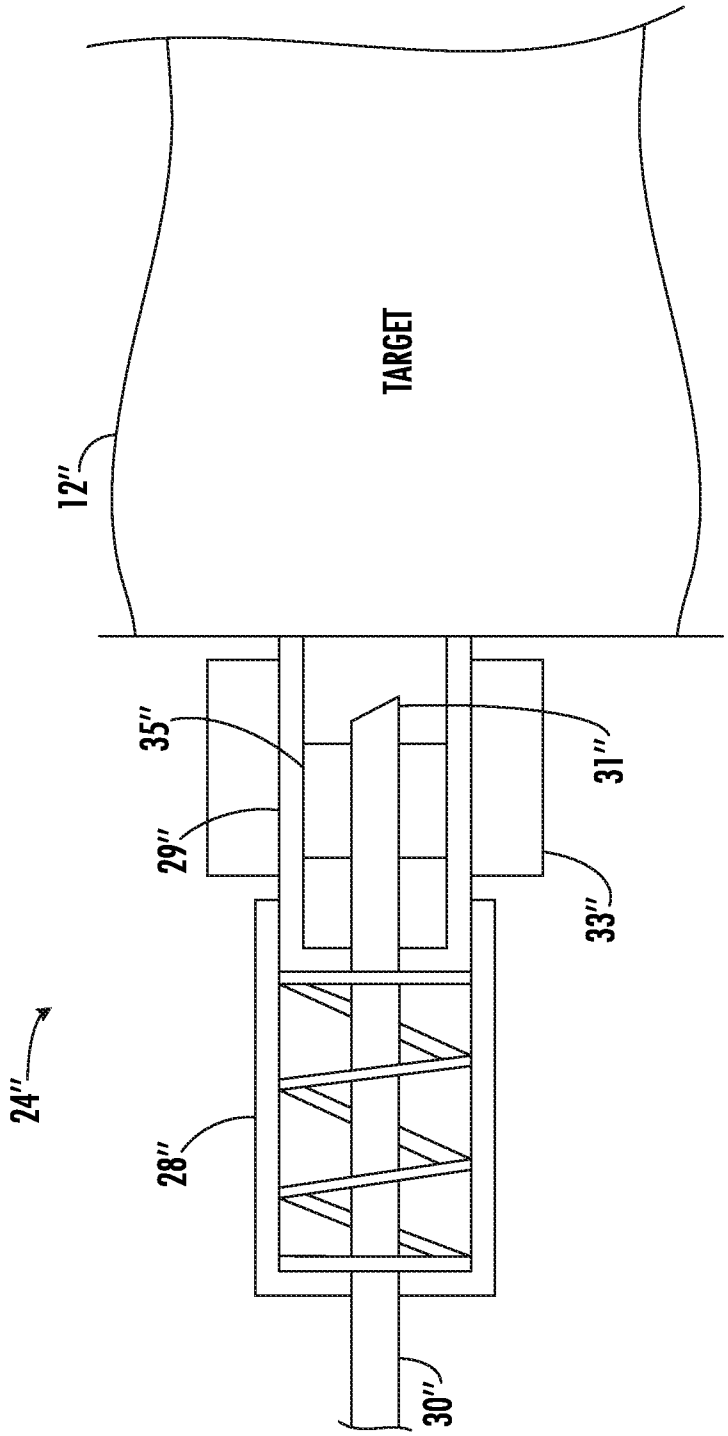

FIG. 4

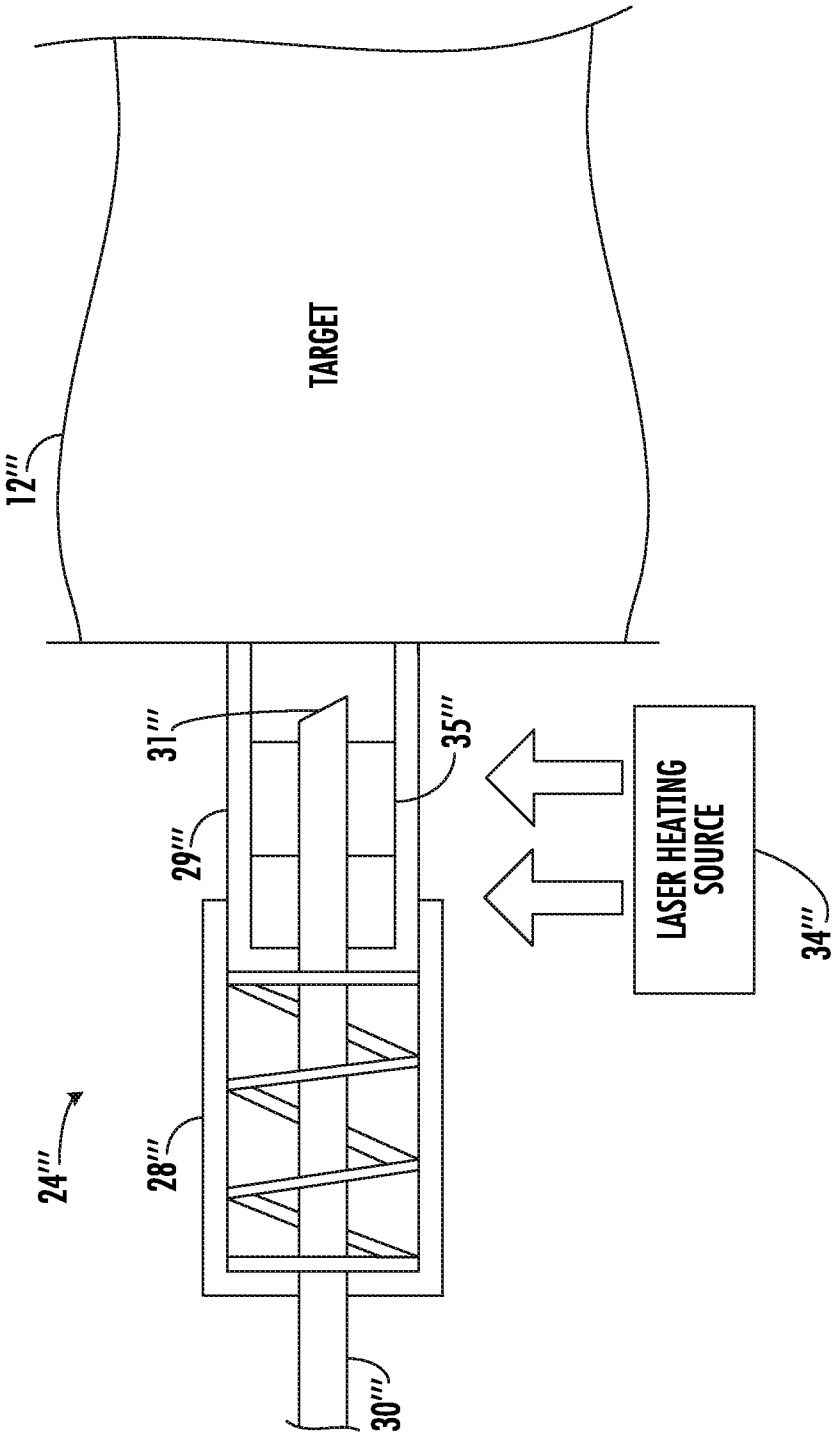

FIG. 5

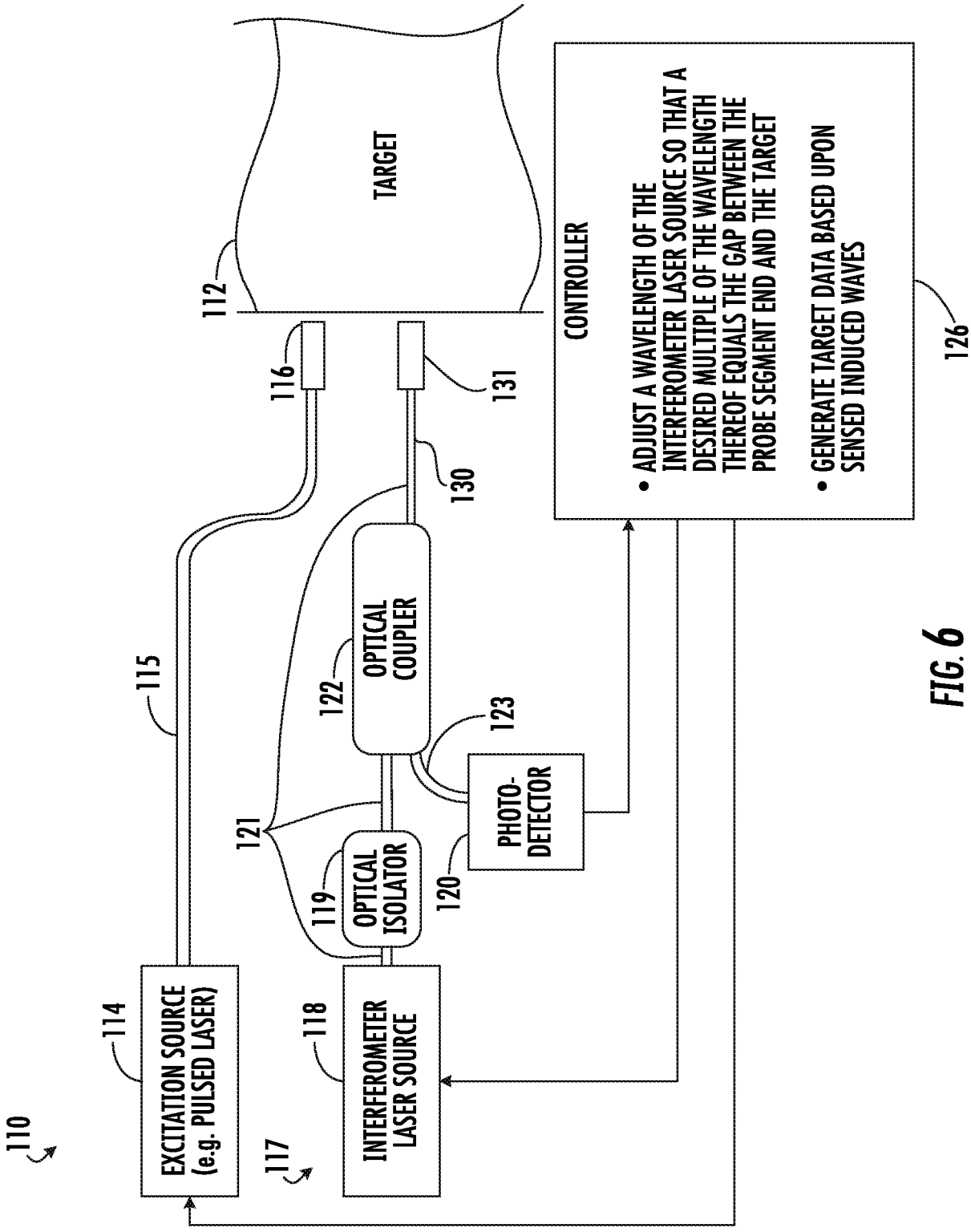
110
EXCITATION SOURCE (e.g. PULSED LASER)
114
117
INTERFEROMETER LASER SOURCE
118
OPTICAL ISOLATOR
119
PHOTO-DETECTOR
120
121
OPTICAL COUPLER
122
123
115
116
131
130
112
TARGET
CONTROLLER
• ADJUST A WAVELENGTH OF THE INTERFEROMETER LASER SOURCE SO THAT A DESIRED MULTIPLE OF THE WAVELENGTH THEREOF EQUALS THE GAP BETWEEN THE PROBE SEGMENT END AND THE TARGET
• GENERATE TARGET DATA BASED UPON SENSED INDUCED WAVES
126

FIG. 6

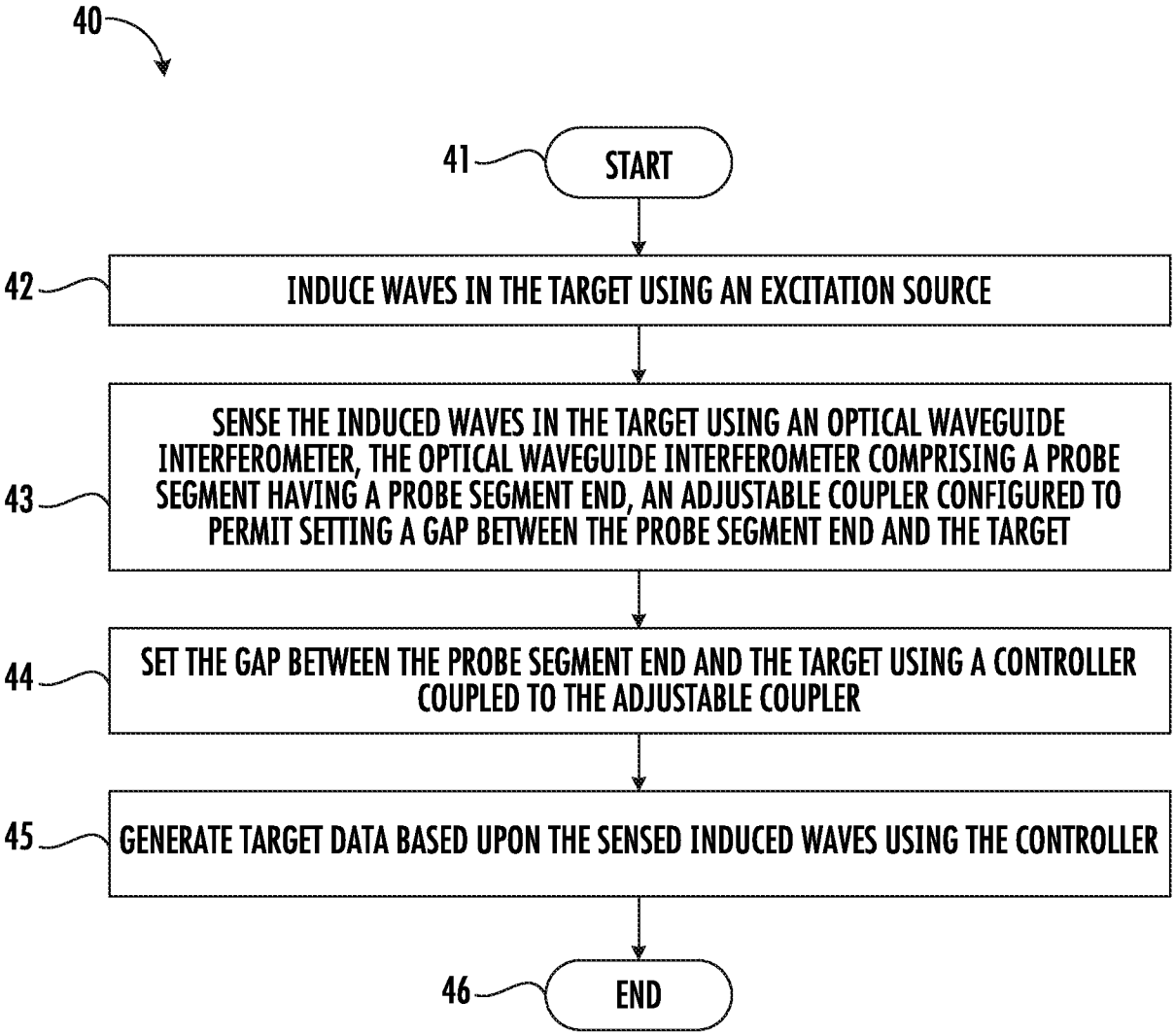
40
41
START
42
INDUCE WAVES IN THE TARGET USING AN EXCITATION SOURCE
43
SENSE THE INDUCED WAVES IN THE TARGET USING AN OPTICAL WAVEGUIDE INTERFEROMETER, THE OPTICAL WAVEGUIDE INTERFEROMETER COMPRISING A PROBE SEGMENT HAVING A PROBE SEGMENT END, AN ADJUSTABLE COUPLER CONFIGURED TO PERMIT SETTING A GAP BETWEEN THE PROBE SEGMENT END AND THE TARGET
44
SET THE GAP BETWEEN THE PROBE SEGMENT END AND THE TARGET USING A CONTROLLER COUPLED TO THE ADJUSTABLE COUPLER
45
GENERATE TARGET DATA BASED UPON THE SENSED INDUCED WAVES USING THE CONTROLLER
46
END

FIG. 7

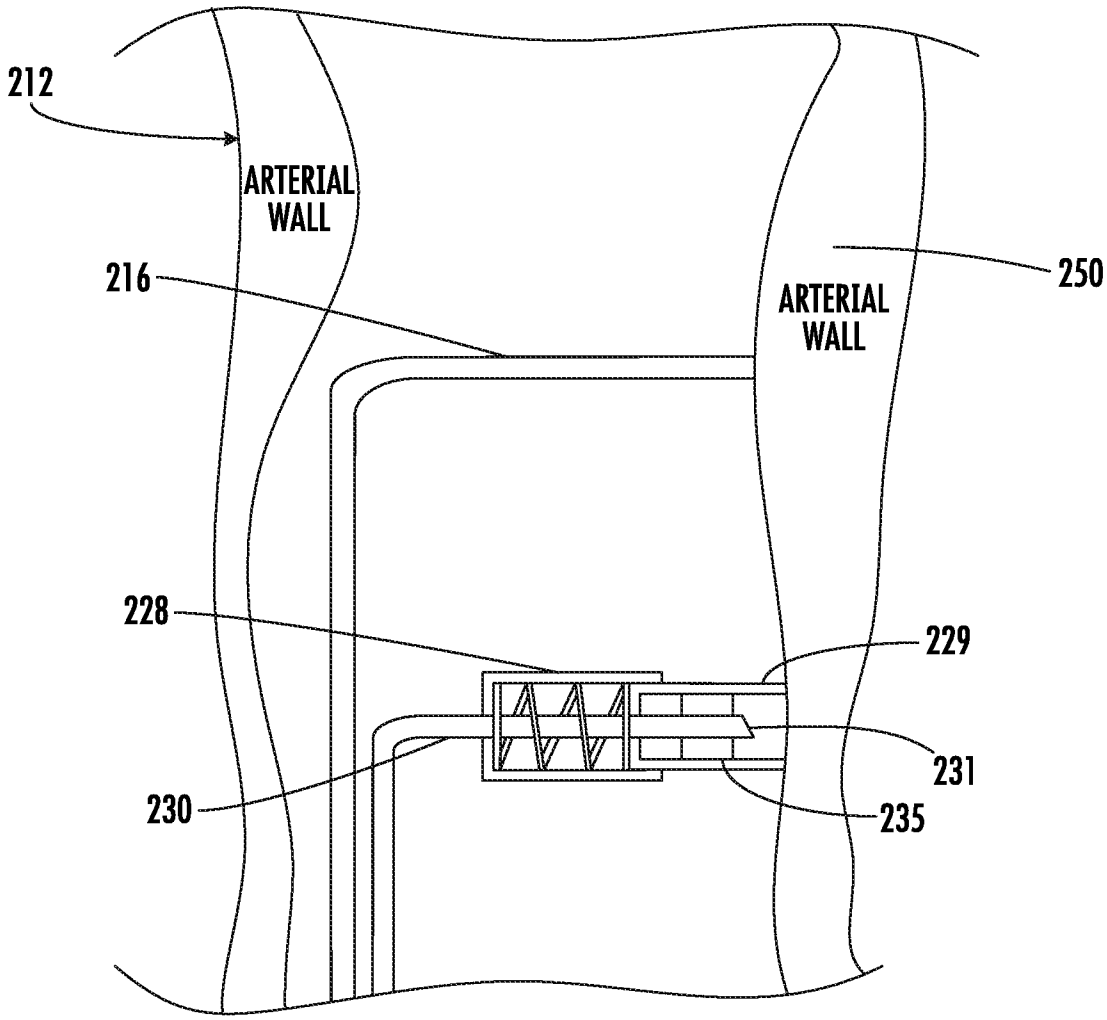

FIG. 8

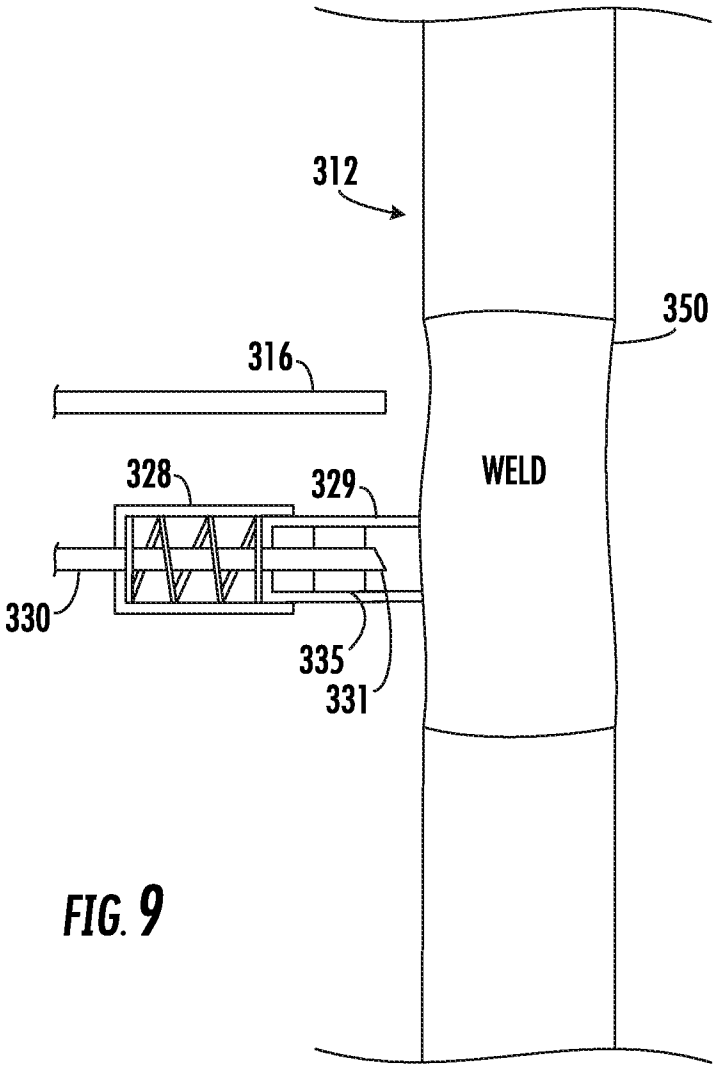

FIG. 9

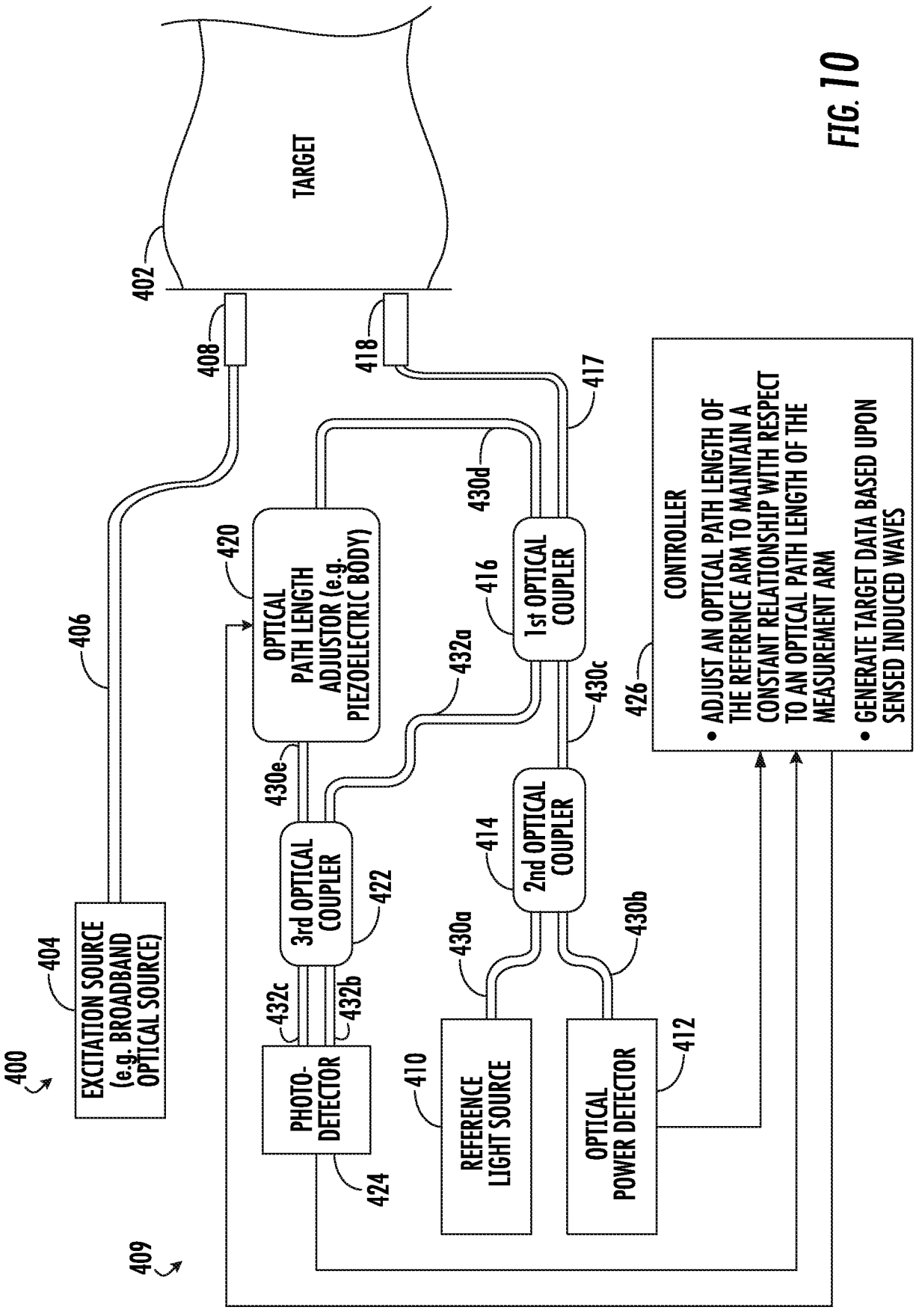
TARGET
402
408
418
417
406
420
OPTICAL PATH LENGTH ADJUSTOR (e.g. PIEZOELECTRIC BODY)
430d
416
1st OPTICAL COUPLER
432a
430c
426
CONTROLLER
• ADJUST AN OPTICAL PATH LENGTH OF THE REFERENCE ARM TO MAINTAIN A CONSTANT RELATIONSHIP WITH RESPECT TO AN OPTICAL PATH LENGTH OF THE MEASUREMENT ARM
• GENERATE TARGET DATA BASED UPON SENSED INDUCED WAVES
430e
3rd OPTICAL COUPLER
422
414
2nd OPTICAL COUPLER
404
EXCITATION SOURCE (e.g. BROADBAND OPTICAL SOURCE)
400
432c
432b
430a
430b
PHOTO-DETECTOR
410
REFERENCE LIGHT SOURCE
OPTICAL POWER DETECTOR
412
424
409

FIG. 10

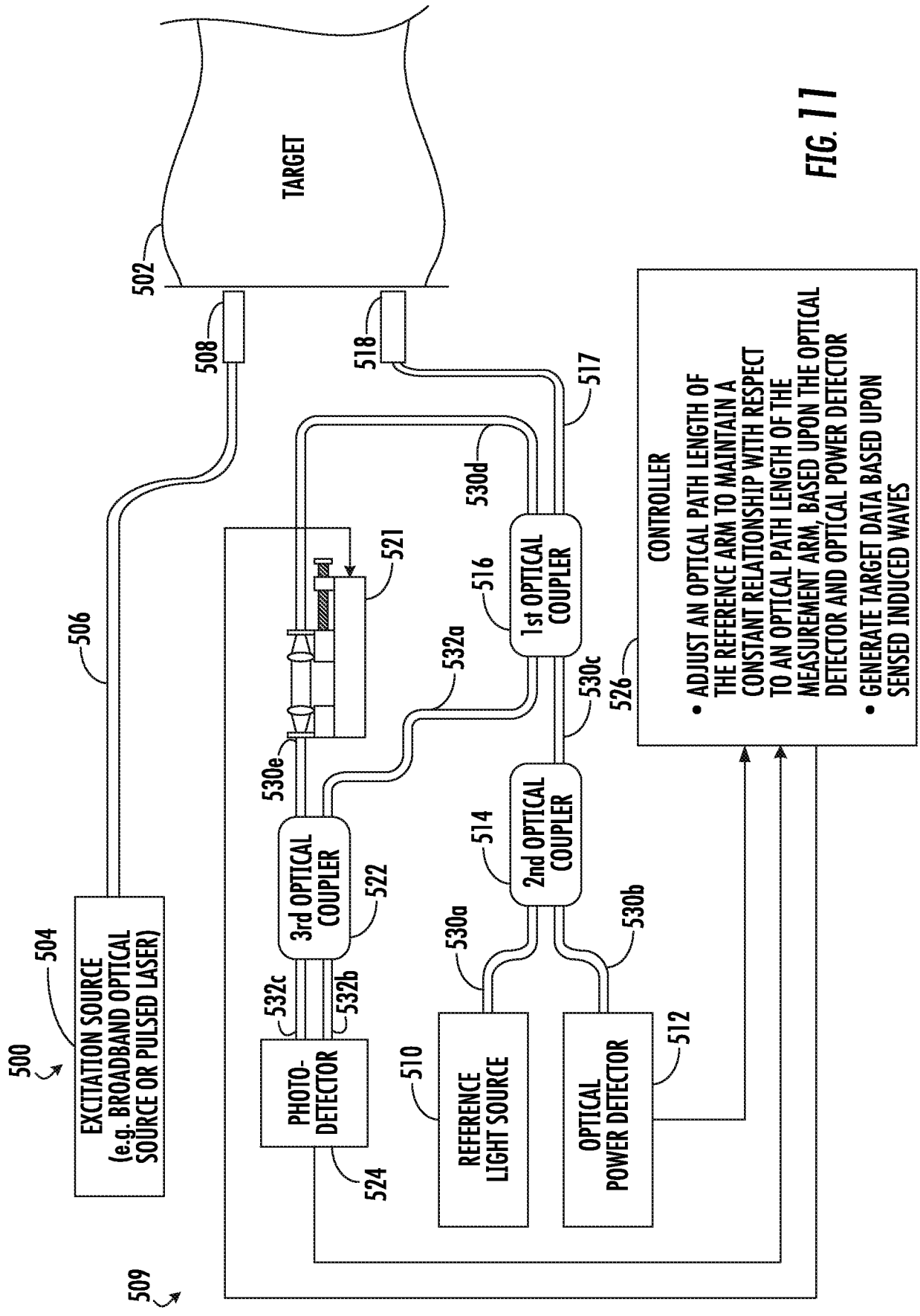
TARGET
502
508
518
517
506
530d
521
516
1st OPTICAL COUPLER
532a
530c
526
CONTROLLER
• ADJUST AN OPTICAL PATH LENGTH OF THE REFERENCE ARM TO MAINTAIN A CONSTANT RELATIONSHIP WITH RESPECT TO AN OPTICAL PATH LENGTH OF THE MEASUREMENT ARM, BASED UPON THE OPTICAL DETECTOR AND OPTICAL POWER DETECTOR
• GENERATE TARGET DATA BASED UPON SENSED INDUCED WAVES
530e
3rd OPTICAL COUPLER
522
514
2nd OPTICAL COUPLER
504
EXCITATION SOURCE (e.g. BROADBAND OPTICAL SOURCE OR PULSED LASER)
532c
532b
530a
530b
500
PHOTO-DETECTOR
524
510
REFERENCE LIGHT SOURCE
OPTICAL POWER DETECTOR
512
509

FIG. 11

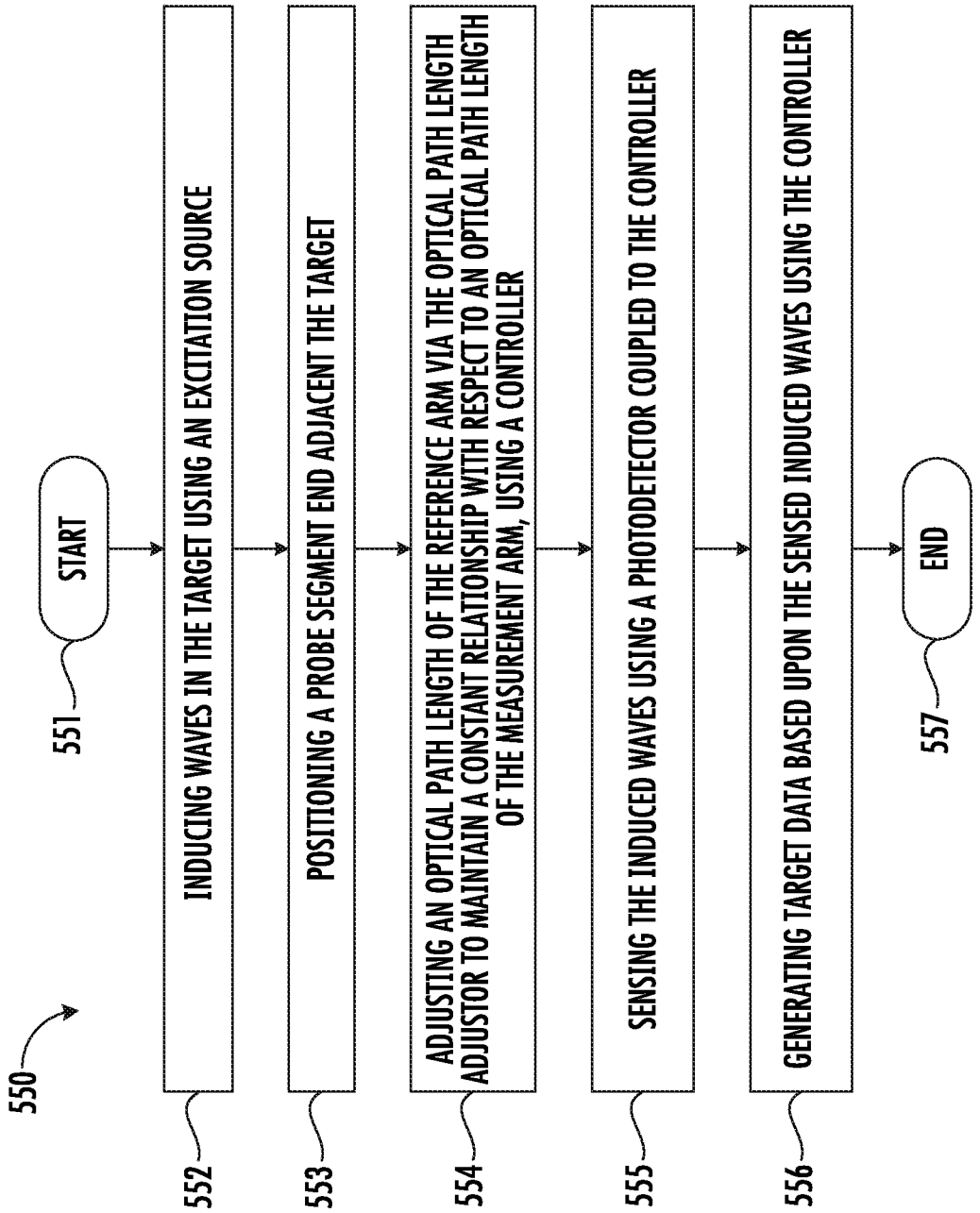
550
START
551
INDUCING WAVES IN THE TARGET USING AN EXCITATION SOURCE
552
POSITIONING A PROBE SEGMENT END ADJACENT THE TARGET
553
ADJUSTING AN OPTICAL PATH LENGTH OF THE REFERENCE ARM VIA THE OPTICAL PATH LENGTH ADJUSTOR TO MAINTAIN A CONSTANT RELATIONSHIP WITH RESPECT TO AN OPTICAL PATH LENGTH OF THE MEASUREMENT ARM, USING A CONTROLLER
554
SENSING THE INDUCED WAVES USING A PHOTODETECTOR COUPLED TO THE CONTROLLER
555
GENERATING TARGET DATA BASED UPON THE SENSED INDUCED WAVES USING THE CONTROLLER
556
END
557

FIG. 12

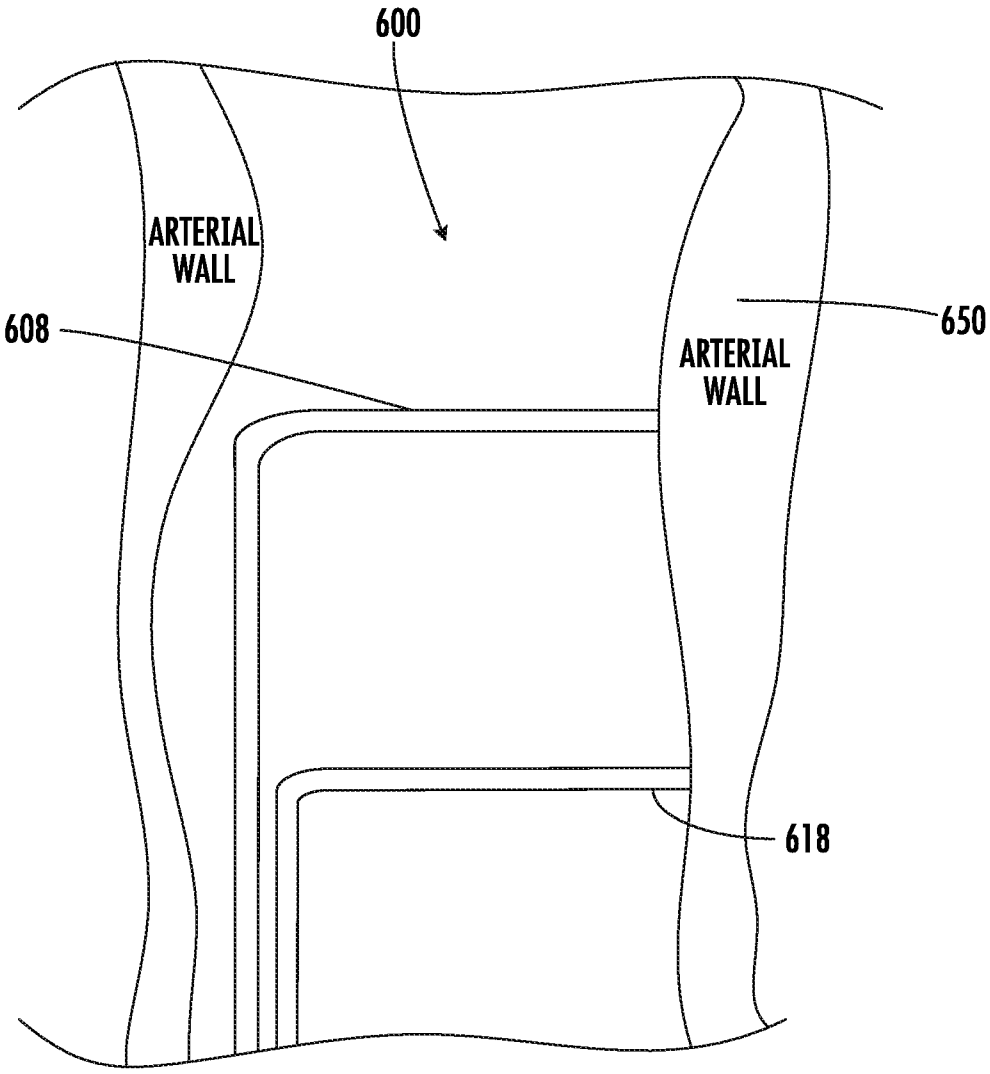

FIG. 13

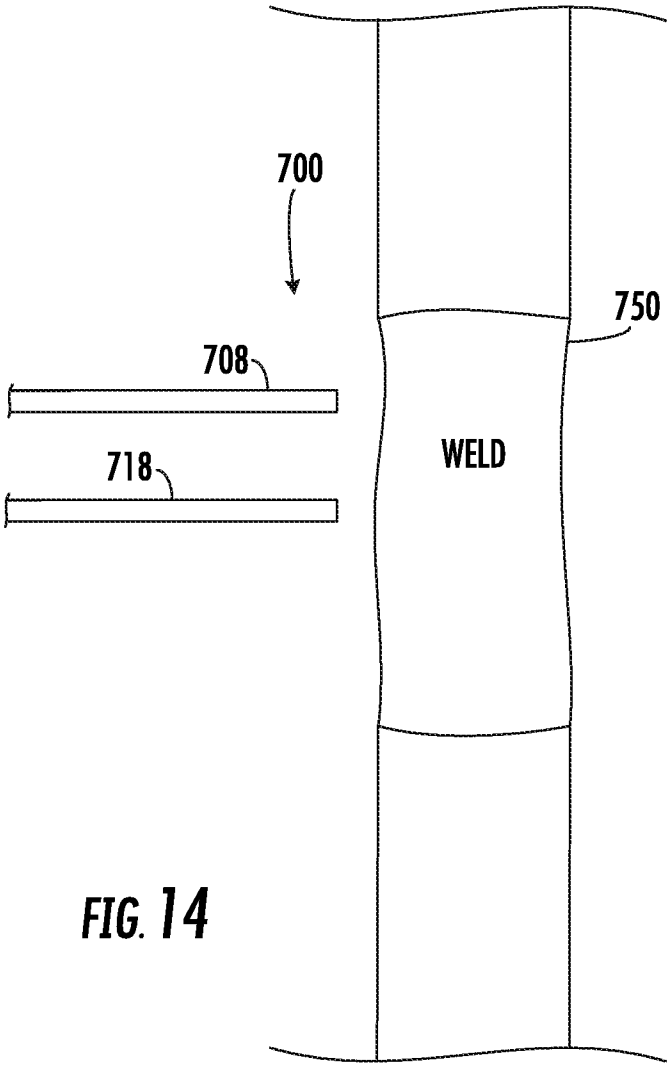

FIG. 14

INTERNATIONAL SEARCH REPORT

International application No
PCT/US2012/034402

A. CLASSIFICATION OF SUBJECT MATTER
INV. G01B9/02 G01B11/06 G01H9/00 G01N29/24 A61B1/00
B23K31/12
ADD.
According to International Patent Classification (IPC) or to both national classification and IPC

B. FIELDS SEARCHED

Minimum documentation searched (classification system followed by classification symbols)
G01B G01H G01N A61B B23K G01D

Documentation searched other than minimum documentation to the extent that such documents are included in the fields searched

Electronic data base consulted during the international search (name of data base and, where practicable, search terms used)
EPO-Internal, WPI Data

C. DOCUMENTS CONSIDERED TO BE RELEVANT

Category*	Citation of document, with indication, where appropriate, of the relevant passages	Relevant to claim No.
X	HEE SU PARK ET AL: "Detection of laser-generated ultrasound based on phase demodulation technique using a fibre Fabry-Perot interferometer; Detection of laser-generated ultrasound based on phase demodulation technique", MEASUREMENT SCIENCE AND TECHNOLOGY, IOP, BRISTOL, GB, vol. 16, no. 6, 1 June 2005 (2005-06-01), pages 1261-1266, XP020090613, ISSN: 0957-0233, DOI: 10.1088/0957-0233/16/6/004 the whole document	1-7
Y	US 6 839 496 B1 (MILLS TIMOTHY NOEL [GB] ET AL) 4 January 2005 (2005-01-04) column 1, line 4 - column 4, line 36; figure 1	8-10

-/--

[X] Further documents are listed in the continuation of Box C.

[X] See patent family annex.

* Special categories of cited documents :

"A" document defining the general state of the art which is not considered to be of particular relevance

"E" earlier application or patent but published on or after the international filing date

"L" document which may throw doubts on priority claim(s) or which is cited to establish the publication date of another citation or other special reason (as specified)

"O" document referring to an oral disclosure, use, exhibition or other means

"P" document published prior to the international filing date but later than the priority date claimed

"T" later document published after the international filing date or priority date and not in conflict with the application but cited to understand the principle or theory underlying the invention

"X" document of particular relevance; the claimed invention cannot be considered novel or cannot be considered to involve an inventive step when the document is taken alone

"Y" document of particular relevance; the claimed invention cannot be considered to involve an inventive step when the document is combined with one or more other such documents, such combination being obvious to a person skilled in the art

"&" document member of the same patent family

Date of the actual completion of the international search	Date of mailing of the international search report
16 July 2012	25/07/2012

Name and mailing address of the ISA/	Authorized officer
European Patent Office, P.B. 5818 Patentlaan 2 NL - 2280 HV Rijswijk Tel. (+31-70) 340-2040, Fax: (+31-70) 340-3016	Petelski, Torsten

INTERNATIONAL SEARCH REPORT

International application No
PCT/US2012/034402

C(Continuation). DOCUMENTS CONSIDERED TO BE RELEVANT

Category*	Citation of document, with indication, where appropriate, of the relevant passages	Relevant to claim No.
Y	HSIAO-CHUAN WANG ET AL: "A Remote, Non-destructive Laser Ultrasonic Material Evaluation System with Simplified Optical Fibre Interferometer Detection", JOURNAL OF NONDESTRUCTIVE EVALUATION, KLUWER ACADEMIC PUBLISHERS-PLENUM PUBLISHERS, NE, vol. 28, no. 2, 2 June 2009 (2009-06-02), pages 75-83, XP019681759, ISSN: 1573-4862 the whole document	8-10
X,P	US 2011/284508 A1 (MIURA TAKAHIRO [JP] ET AL) 24 November 2011 (2011-11-24) paragraph [0046] - paragraph [0060]; figures 1,2 paragraph [0105] - paragraph [0108]; figure 21	1-7

INTERNATIONAL SEARCH REPORT

Information on patent family members

International application No
PCT/US2012/034402

Patent document cited in search report	Publication date	Patent family member(s)	Publication date
US 6839496 B1	04-01-2005	AT 344447 T	15-11-2006
		AU 5556000 A	31-01-2001
		DE 60031677 T2	06-09-2007
		EP 1192445 A1	03-04-2002
		ES 2275519 T3	16-06-2007
		US 6839496 B1	04-01-2005
		WO 0101111 A1	04-01-2001
US 2011284508 A1	24-11-2011	CN 102294549 A	28-12-2011
		EP 2388573 A2	23-11-2011
		JP 2012006078 A	12-01-2012
		US 2011284508 A1	24-11-2011