April 5, 1960 N. HARTLEY 2,931,521

LEVEL CONTROL USING ALTERNATING CURRENT THROUGH MATERIAL OF VARIABLE RESISTANCE

Filed May 2, 1957

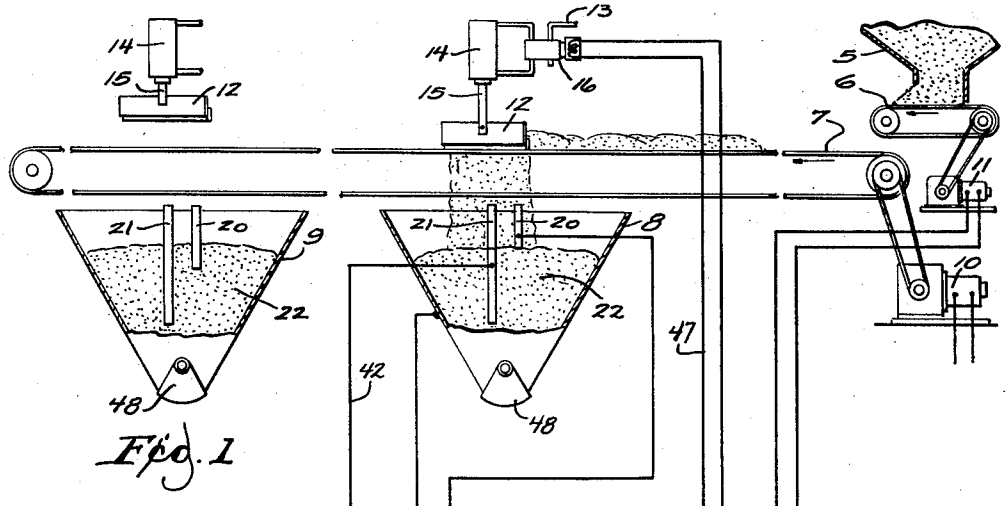

Fig. 1

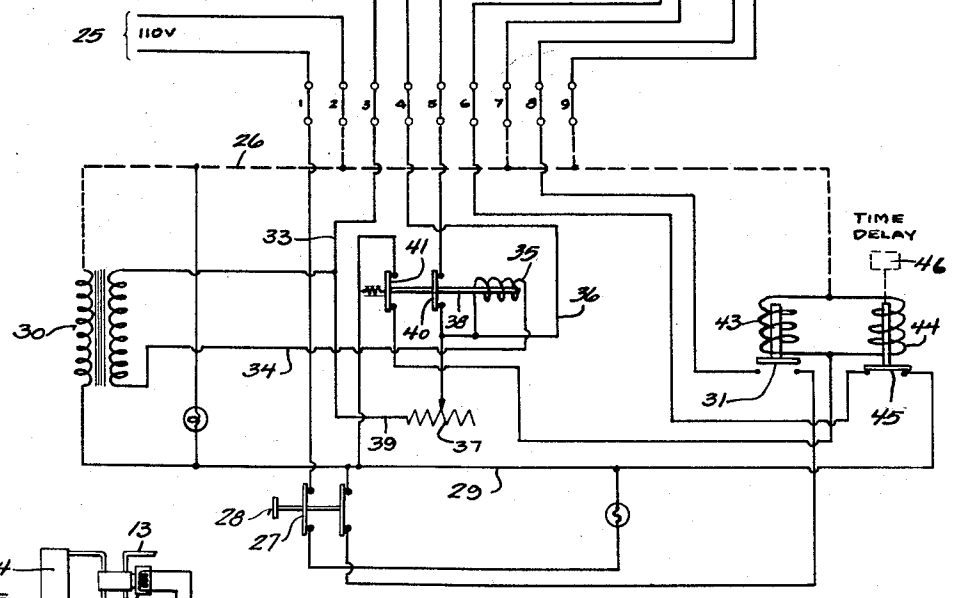

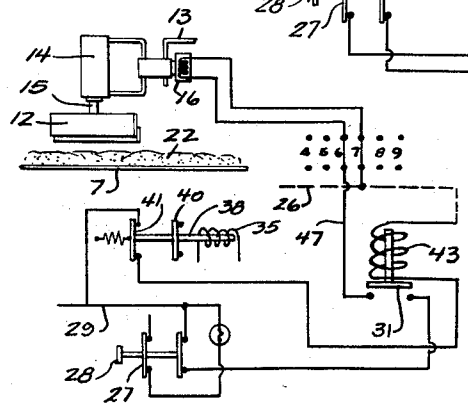

Fig. 2

INVENTOR.
NELSON HARTLEY
BY
Wheeler, Wheeler & Wheeler
ATTORNEYS

United States Patent Office 2,931,521 Patented Apr. 5, 1960

2,931,521

LEVEL CONTROL USING ALTERNATING CURRENT THROUGH MATERIAL OF VARIABLE RESISTANCE

Nelson Hartley, Baltimore, Md., assignor to Hartley Controls Corporation, Neenah, Wis., a corporation of Wisconsin

Application May 2, 1957, Serial No. 656,593

9 Claims. (Cl. 214—17)

This invention relates to level control using alternating current through material of variable resistance. Control of sand level in a molder's hopper is disclosed by way of exemplification.

The arrangement is such that sand is supplied to the hopper when the level drops below one probe and the supply is cut off when the sand reaches the level of an upper probe. Current from the respective probes passes through the sand to another electrode which here comprises the hopper wall.

It has been supposed that alternating current would not be practical in such an installation because the resistance of the sand varies widely according to its composition, physical structure, temperature, and water content. Sand having low conductivity would normally have to build up to cover a greater area of the upper probe before there would be sufficient flow of current to actuate the control relay. Meantime, as the current in the relay approached the desired value, the alternating current would cause the armature to chatter and the contacts would become pitted due to the excessive arcing consequent upon operation in this manner.

According to the present invention the primary relay does not have to be specially designed or specially sensitive. It is an ordinary double pole relay. Its coil is connected to be energized from the high probe in the hopper and one of its contacts sets up a holding circuit to the coil through the other probe so that the relay contacts do not open until the sand clears the lower end of the longer probe means. The use of alternating current is made practical by providing a shunt circuit to the relay coil by-passing the probes and the sand and including a variable resistance. This can be set to supply nearly all current required to operate the relay, so that the remaining requirement is so small that the relay will close immediately regardless of sand resistance and yet will open immediately when the sand clears the lower probe.

The alternating current is very valuable in this device because it eliminates electrolytic attack on the electrodes (the probes or hopper) as experienced in the use of D.C. probe circuits.

As specifically applied to molding sand practice, the electrical system may control a "plow" which is movable to and from a supply belt and which, in its operative position, deflects sand from the belt into the molder's hopper. In the preferred embodiment, a time delay feature is incorporated in the circuit so that even after the sand level reaches the upper probe, the plow will continue effective until all sand remaining on the supply belt is sloughed off. This feature is used in conjunction with means for interrupting at the source the movement of sand onto the supply belt, the object being to leave the supply belt free of sand between hopper filling operations, thereby preventing sand from drying out due to exposure on the belt.

In the drawings:

Fig. 1 is a diagrammatic view of the apparatus and circuits employed.

Fig. 2 is a fragmentary diagrammatic view showing a modified embodiment.

The prepared sand is stored in the supply hopper **5** and issues therefrom only when the conveyor belt **6** is in operation across the mouth of the hopper to discharge sand onto the conveyor belt **7** which delivers it to one or more individual molder's hoppers **8, 9**. Belt **7** may be assumed to be in continuous operation by means of motor **10**. The control belt **6** is actuated by motor **11** which is started and stopped in accordance with the preferred embodiment of the present invention.

In accordance with conventional practice, a deflector or plow **12** is movable between retracted and operative positions respecting belt **7** at each of the molder's hoppers **8, 9**. The plow is commonly operated pneumatically by means of air from a supply pipe **13** admitted to one end or the other of the cylinder **14** to raise or lower the ram plunger **15** upon which the plow is mounted. The air supply is controlled by a solenoid valve **16**.

In accordance with the present invention short and long probes **20** and **21** are placed in the respective hoppers **8, 9**, which serve as containers for the material to be measured. For illustrative purposes, the material comprises the sand shown at **22** in the supply hopper **5** and on the belt **7** and in the respective hoppers. The short probe **20** represents a means of determining the upper level to which the material **22** is to be filled into the container. The longer probe **21** is a means of determining when the re-filling operation is to be initiated.

One side of the alternating current supply source **25** is connected to a ground lead **26**. The hot side of the supply source is connected through the contactor **27** of the double pole main switch **28** to the line **29** which energizes the transformer **30** and also supplies current, subject to control of normally closed relay contactor **31**, to motor **11** which actuates the conveyor **6** for the control of sand delivery from the supply hopper **5**.

The secondary of transformer **30** is connected through conductor **33** to the container **8** which is used as an electrode exposed to the sand **22**. The other side of the secondary is connected through conductor **34** and relay coil **35** and conductor **36** to the upper probe **20**. When a sufficient length of probe **20** is exposed to the material **22** in container **8**, there will be a flow of current through the material tending to attract the armature **38** of relay coil **35** to move normally open contactors **40** and **41** to closed circuit position, this being the status of the armature and contactors as illustrated in the drawing.

The primary relay armature **38** would chatter and its contacts would be pitted and short lived if the alternating current through the sand were solely relied upon for energizing coil **35**. The resistance of the sand is highly variable and use of alternating current would not be practicable if the flow through the coil had to build up slowly during the filling of the hopper to a value sufficient to actuate the armature under all conditions. Accordingly, adjustable resistor **37** is set to permit flow through shunt circuit **39** of almost enough current to close the contacts **40** and **41** but not enough to hold them closed.

With this shunt, there is substantially immediate response of armature **38** in a circuit closing direction when the sand touches the probe **20**, without the chattering and pitting which would be the consequence if the current had to be built up to an effective value as the sand gradually climbs up probe **20**. On the other hand, the armature immediately drops open when the sand clears probe **21**. Thus there is no indecisive action either in the energization or de-energization of this relay and this makes it practicable to use alternating current with just an ordinary conventional relay. No unusual relay sensitivity or relay adjustment is required because the shunt circuit is adjustable to provide the desired operation.

For example, and not by way of limitation, the relay may trip when 300 milliamperes flows through its coil. Of this current, perhaps 270 milliamperes may be provided by the shunt circuit and only 30, more or less, by the electrode in the sand.

Contactor **40**, in its closed position, completes a holding circuit from the longer probe **21** through conductor **42** to the relay coil **35**. In other words, the response of the relay achieved by engagement of the sand with the upper probe **20** will continue effective as long as the sand remains in contact with the longer probe **21**.

The result of the described operation of the relay has been to close the circuit controlled by relay contactor **41** between the supply conductor **29** and the relay coils **43** and **44**. In the illustrated position of the parts, the energization of coil **43** has already resulted in the movement of the contactor **31** to its open circuit position, thereby interrupting the operation of motor **11**. As appears in the drawing, sand is no longer being delivered from the supply hopper **5** to the distributing belt **7**. The contactor **45** controlled by coil **44** remains closed due to the provision of a time delay mechanism **46**. This contactor controls the flow of current from conductor **29** through conductor **47** to the solenoid valve **16**. As long as the time delay relay remains closed, air from the supply line **13** will continue to be communicated to the cylinder **14** in a direction to maintain the normally retracted plow **12** effective to deflect sand from the distributing belt **7** into the hopper **8** in order to clear the belt.

The upper probe **20** is set at such a level in the molder's supply hopper **8** as to allow sand to be delivered to that particular hopper during the period for which the time delay relay will remain active. The ordinary time delay relay is also adjustable and either the time adjustment or the setting of the upper probe may be used to ensure the provision of adequate space in the hopper **8** to receive the sand which is delivered thereto for belt clearing purposes after the flow of sand to the belt has been interrupted.

The molder will withdraw sand from hopper **8** through gate **48** as required for his work. As the sand level drops in hopper **8**, there will continue to be a flow of current from probe **21** to the hopper wall or other electrode to enable the circuit through coil **35** to maintain the relay armature **38** in the illustrated circuit closing position. However, when the sand level falls below the lower end of the long probe **21**, the holding circuit will be broken, armature **38** will move to its normal open circuit position at the left of that illustrated, thereby causing contactor **41** to open the circuit controlled by it while contactor **40** opens the circuit through coil **35**.

Thus, every time there is a demand for additional material to re-fill the container **8**, the coils **43** and **44** will be de-energized to initiate a flow of material toward container **8**. In the instant device, this is accomplished by starting the motor **11** to deliver material from the supply hopper **5** and to lower the deflecting plow **12** into operative position for deflecting the material into the hopper **8** from the continuously acting conveyor **7**. When the material reaches the depth illustrated, the response of coil **35** to the flow of current from probe **20**, supplemented by that through the adjustable resistor **37**, closes the circuit to relay **43**, **44** to open the circuit to the material supply means. The holding circuit through contactor **40** prevents the supply means from operating until the material falls below the depth of the longer probe.

It will be understood that each successive hopper served by the distributing belt **7** will be provided with a circuit identical with that which controls the delivery of the material to hopper **8**. However, it will be observed that the upper probe in hopper **9** is somewhat deeper than the upper probe in hopper **8** because, being served by a greater length of belt **7**, space must be provided for unloading into hopper **9** a greater amount of material from the belt after the tripping of the relay **43** than was required to be delivered into hopper **8**, which is closer to the source.

In installations in which only a single control of delivery of material into the container may be required, the time delay relay can be dispensed with. This is shown in Fig. 2, wherein the coil **43** alone suffices to actuate the solenoid **16** for the purposes described. It is desired again to emphasize the fact that it is immaterial in the broader aspects of the invention whether the responding device which controls the delivery of the material comprises the plow **12** or something else. However, while the invention has broad aspects, it does not minimize its importance in the particular field of the illustrated embodiment, wherein it solves problems of long standing and greatly reduces costs as compared with conventional means of controlling by hand the replenishment of sand in the molder's hoppers.

I claim:

1. In combination a container for an electrically conductive material provided with an electrode connection, electrically controlled means for filling the container, a high level electrode in the container in a position to be in contact with material nearly filling the container and a controlling relay for said filling means and including an actuating coil having a series connection with the high level electrode, said relay including contactor means for energizing the filling means, a source of current in circuit with said electrodes and coil, and a by-pass circuit connection between the source and coil independently of the electrodes and material and having an electrical current carrying characteristic so related to the relay-actuating characteristic of the coil as to supply the major part of the current required for relay operation.

2. The device of claim 1 in which the current source is a source of alternating current.

3. The device of claim 2 in further combination with an elongated electrode in the container extending to a level at which material in the container is to be replenished, said relay including a holding circuit including said elongated electrode and said coil and for which said relay includes a circuit closing contactor means, whereby the relay will continue operative to deenergize the refilling means until the level of material in the container falls below the longer electrode.

4. The device of claim 2 in which the by-pass circuit connection between the source of the coil includes adjustable means for varying the flow of current through the by-pass circuit.

5. The device of claim 2 in which the filling means comprises a plow movable between operative and retracted positions and provided with electric means for effecting such movement and with a supply belt with which the plow is in close association in its operative position to deflect material from the belt into the container.

6. The device of claim 5 in further combination with means subject to the control of said relay for delivering material to the belt to be conveyed thereby to said plow.

7. The device of claim 6 in further combination with a time delay relay connected between the first mentioned relay and the electrical means for actuating the plow, said time delay relay being adapted to maintain the plow in its operative position substantially for such a period as may be required to clear the belt after the material in the container contacts the high level electrode.

8. The combination with a molder's hopper and a sand delivering conveyor, of a plow movable between retracted position and an operative position respecting the conveyor for deflecting sand from the conveyor into the hopper, electrically operable means for determining the position of the plow, an elongated probe in the hopper extending to the desired minimum sand level there-

in, a high level probe within the hopper, the hopper being provided with an electrode connection and the respective probes being provided with electrical connections, a relay having contactor means, an armature connected with said means, and a coil, circuit connections including a supply source in which the coil is connected in series between the high level probe and the electrode connection aforesaid, holding circuit connections including said source and in which the coil is connected in series subject to the control of said contactor means between the elongated probe and the electrode connection aforesaid, an operating circuit connection including a supply source and subject to the control of the contactor means of said relay and leading to the means for electrically controlling the position of the plow, the last mentioned circuit connections including a holding relay for maintaining the plow in operative association with the conveyor after the first mentioned relay has been actuated by current flow through the high level probe to a position which would otherwise render the plow immediately inactive by effecting movement thereof to its retracted position.

9. The combination with a molder's hopper in which it is desired to restore molding sand to a predetermined level after the sand has fallen to a predetermined low level, the said hopper having an electrode connection, of an electrically conductive high level probe within the hopper, an elongated electrically conductive probe extending within the hopper to the level at which replenishment is desired, electrically controlled means for delivering sand to the hopper, and a control relay comprising

a coil, an armature and first and second contactors, an electrical circuit including the high level probe, the relay coil, a source of alternating current and the electrode connection in series, whereby the relay coil is energized by a flow of current to the sand in the hopper when the sand contacts the high level probe, circuit means controlled by the first contactor and closed upon the energization of said coil to connect said coil and said elongated probe and current source in series to hold said coil energized as long as the sand in the hopper remains in contact with the elongated probe, and circuit means controlled by the second contactor and effective when the coil is de-energized to connect in series said source of current and the means for electrically controlling delivery of sand to the hopper, whereby said last mentioned means will become effective to initiate delivery of sand as soon as the sand falls below the level of the elongated probe and will remain effective at least until the level of sand in the hopper reaches the level of the high level probe.

References Cited in the file of this patent

UNITED STATES PATENTS

1,446,961	Brown	Feb. 27, 1923
2,542,239	Engels et al.	Feb. 20, 1951
2,614,707	Bilterman	Oct. 21, 1952

FOREIGN PATENTS

623,970	Great Britain	May 25, 1949
628,336	Great Britain	Aug. 26, 1949