(No Model.) 2 Sheets—Sheet 1.

P. M. SMITH.

STEAM ENGINE.

No. 393,037. Patented Nov. 20, 1888.

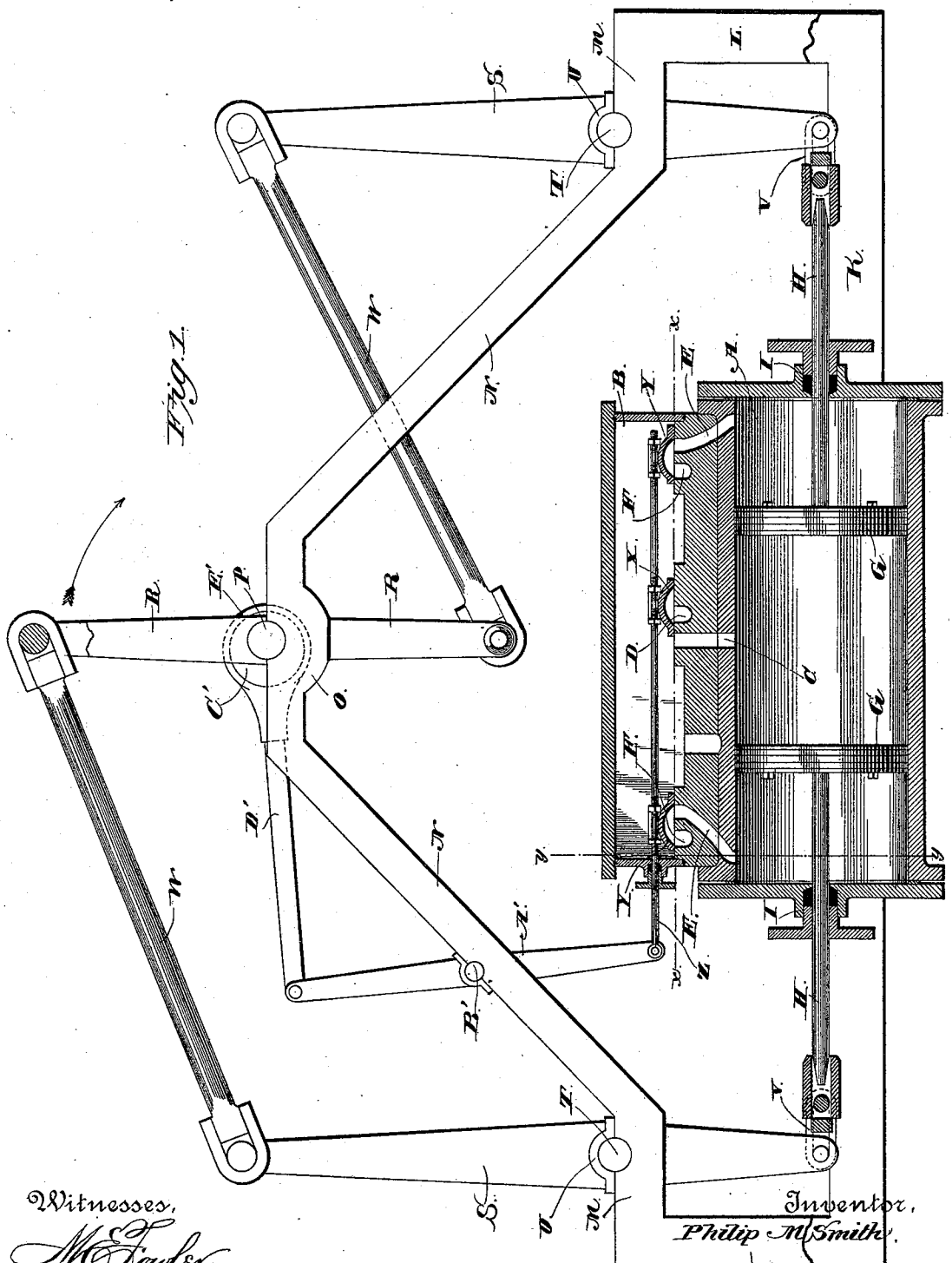

Witnesses,

M. E. Fowler,

J. W. Garner

Inventor,

Philip M. Smith.

By his Attorneys

C. A. Snow & Co.

N. PETERS, Photo-Lithographer, Washington, D. C.

(No Model.) 2 Sheets—Sheet 2.

P. M. SMITH.

STEAM ENGINE.

No. 393,037. Patented Nov. 20, 1888.

Fig. 2.

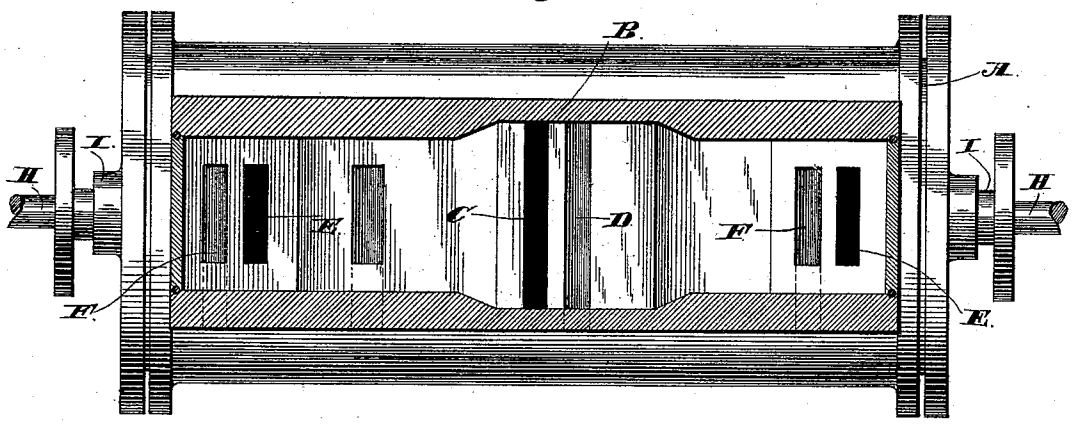

Fig. 3.

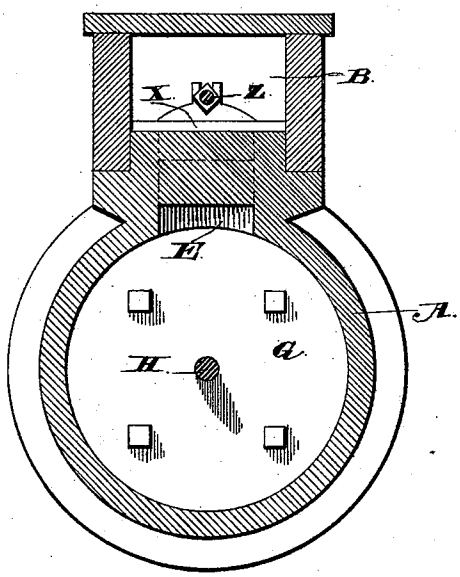

Witnesses.
M. E. Fowler.
J. W. Garner

Inventor.
Philip M. Smith.

By his Attorneys
C. A. Snow & Co.

N. PETERS, Photo-Lithographer, Washington, D. C.

UNITED STATES PATENT OFFICE.

PHILIP M. SMITH, OF PARKERSBURG, WEST VIRGINIA.

STEAM-ENGINE.

SPECIFICATION forming part of Letters Patent No. 393,037, dated November 20, 1888.

Application filed April 20, 1888. Serial No. 271,291. (No model.)

To all whom it may concern:

Be it known that I, PHILIP M. SMITH, a citizen of the United States, residing at Parkersburg, in the county of Wood and State of West Virginia, have invented a new and useful Improvement in Steam-Engines, of which the following is a specification.

My invention relates to an improvement in steam-engines; and it consists in the peculiar construction and combination of devices, that will be more fully set forth hereinafter, and particularly pointed out in the claims.

In the accompanying drawings, Figure 1 is a vertical longitudinal central sectional view of the steam-engine embodying my improvements. Fig. 2 is a horizontal sectional view of the same, taken on the line *x x* of Fig. 1. Fig. 3 is a vertical sectional view of the same, taken on the line *y y* of Fig. 1.

A represents a cylinder, and B represents the steam-chest, which is arranged on the upper side of the cylinder. In the center of the upper side of the cylinder is a steam port or channel, C. Alongside of the said channel or port is an exhaust-port, D. At the ends of the same are the channels or ports E, and on one side of each opening or port E is an exhaust-port, F.

G represents a pair of pistons, which are arranged in the cylinder, and are each provided with a piston-rod, H. The said piston-rods extend outward in opposite directions, pass through central openings in the cylinder-heads, and said cylinders are provided with suitable packing-boxes, I, for the piston-rods.

K represents a bed-frame in which the cylinder is supported. Said bed-frame is provided at its ends with vertical standards L, from the upper sides of which extend inwardly-projecting arms M.

N represents a pair of upwardly-converging arms, which have their upper ends connected by a horizontal portion, O, which is supported at a suitable elevation from the cylinder. The said bed-frame and the remaining portions of the frame are preferably made of cast metal, but may be made of any suitable material.

P represents the driving-shaft, which is journaled in bearings in the central portions, O. Formed in the center of said shaft are a pair of cranks, R, which extend in opposite directions.

S represents a pair of rocking levers, which are provided with trunnions or rock-shafts T at a distance of about one-third their length from one end, and said trunnions or rock-shafts are journaled in bearings U on the inwardly-extending arms M. The lower ends of the levers S are connected to the outer ends of the pistons H by means of links V, and the upper ends of the said levers S are connected to the wrists of the cranks R by means of pitmen W.

X represents a slide-valve, which is adapted to alternately uncover the port or channel C and put the same in communication with the exhaust port or channel D; and Y represents a pair of slide-valves, which are adapted to alternately uncover the ports or channels E and put the same in communication with the exhaust ports or channels F. Said valves X and Y are so arranged that when the valve X has uncovered the port or channel C the valves Y have established communication between the ports or channels E and the exhaust-ports F.

Z represents a valve-rod, which is rigidly secured to the valves X Y, and has one end projecting through a stuffing-box in one end of the steam-chest B.

A′ represents a rock-lever, which is provided at its center with trunnions or a rock-shaft, B′, journaled in bearings on one pair of the arms M. The lower end of the said lever is pivotally connected to the projecting end of the valve-rod.

C′ represents an eccentric, which is keyed to the shaft P, and D′ represents a pitman, which is connected to the upper end of the lever A′ and to an eccentric-strap, E′, which works on the eccentric C′.

The operation of my invention is as follows: When the engine is in its initial position, with the port or channel C uncovered and the pistons arranged in the cylinder near the center thereof, steam is admitted to the cylinder between the pistons and forces the same outward in opposite directions, thereby causing the piston-rods to operate the rock-levers S, and through the pitmen W and the cranks R to cause the shaft P to make a half-revolution. As the shaft P rotates, the eccentric operates the pitman D′ and the rock-arm A′, and causes the latter to draw upon the valve-rod Z, so as to move the valve X over the port or channel C and put the same in communication with

the exhaust-port D and move the valves Y so as to cause the latter to uncover the ports or channels E, when the steam instantly passes through said channel from the steam-chest into the ends of the cylinder and acts upon the outer sides of the pistons, thereby driving them inward toward each other and causing the shaft P to complete its revolution, by which time the eccentric will have reversed the arrangement last described of the valves, and the operation before described will be repeated.

From the foregoing it will be understood that the ports or channels C E operate alternately as inlet and exhaust ports.

A steam-engine thus constructed is cheap and simple and is advantageous, in that it utilizes all of the power of the steam and causes the same to operate two pistons and to move the same simultaneously in opposite directions. With slight modifications, such as will make themselves manifest to any person skilled in this art and which do not amount to invention, the engine may be adapted for operating propellers in steamships and stern paddle-wheels in river steamboats.

Having thus described my invention, I claim—

1. The combination, in a steam-engine, of the cylinder having the central port, C, the end ports, E, and the exhaust-ports in proximity to said ports E C, the pistons operating in the cylinder in opposite directions simultaneously, the valves arranged over the ports, and the valve-rod connecting the valves and adapted to reciprocate the same in unison, substantially as described.

2. The combination, in a steam-engine, of the cylinder having the central ports, C, the end ports, E, and the exhaust-ports in proximity to said ports E C, the pistons arranged in the cylinder and having the independent piston-rods extending through the ends of the cylinder in opposite directions, the valves adapted to alternately admit and exhaust steam from the center and ends of the cylinder, the driving-shaft having the double cranks extending in opposite directions, the rocking levers S, connected to the piston-rod, and the pitmen connecting said rocking levers to the cranks, substantially as described.

In testimony that I claim the foregoing as my own I have hereto affixed my signature in presence of two witnesses.

PHILIP M. SMITH.

Witnesses:
W. T. STROUD,
J. A. DENNIS.