United States Patent

[11] 3,558,903

[72] Inventor **Norihoko Yamano**
Kokubunji, Japan

[21] Appl. No. **646,397**
[22] Filed **June 15, 1967**
[45] Patented **Jan. 26, 1971**

[73] Assignee **Rion Kabushiki Kiasha**
Tokyo, Japan

[32] Priority **June 25, 1966, July 7, 1966**
[33] **Japan**
[31] **41/40968 and 41/64532**

[54] **MECHANICALLY ACTUATED PIEZOELECTRIC VOLTAGE SOURCE**
1 Claim, 12 Drawing Figs.

[52] **U.S. Cl.** **310/8.7,** 310/9.1, 315/55, 317/79
[51] **Int. Cl.** **H01v 7/00**
[50] **Field of Search** ..... 310/8.3-—8.7, 9.1; 317/79PZ; 315/55, 209PZ; 431/255

[56] **References Cited**

UNITED STATES PATENTS

3,101,420	8/1963	Hufford	310/8.7
3,114,059	12/1963	Hufferd	310/8.7
3,211,069	10/1965	Rixton	310/8.7
3,295,024	12/1966	Newman	310/8.7
3,354,327	11/1967	Benson	310/9.1
3,430,080	2/1969	Horan	310/9.1
3,453,458	7/1969	Curran	310/9.1
3,469,119	9/1969	Parkinson	310/8.7

FOREIGN PATENTS

1,054,103	1/1967	Great Britain	310/8.3

Primary Examiner—Milton O. Hirshfield
Assistant Examiner—Mark O. Budd
Attorney—Wenderoth, Lind & Ponack

ABSTRACT: The disclosed devices include a ceramic piezoelectric element pivotable mounted at one end and having a pressure bearing member secured at the other end. A wedge member is disposed above the pressure bearing member to rollably sandwich a roller of circular cross section between both members. When the roller is forcedly rolled in a space formed between both members it will make the piezoelectric element swing about its lower end and consequently squeezes the latter, resulting in the production of high voltage by the element. During returning movement of the roller a high voltage is also produced by the piezoelectric element. The wedge may be spring loaded for the purpose of preventing the roller from loosening from two sandwiching members during service. The roller may have a cross section in the form of a regular polygon such as a regular hexagon embraced between a pair of opposed identical grooves trapezoidal in shape. Also a force may be applied directly to the piezoelectric element to swing, whereby squeezing it through rolling of the associated roller. A completely moisture proof device is also disclosed.

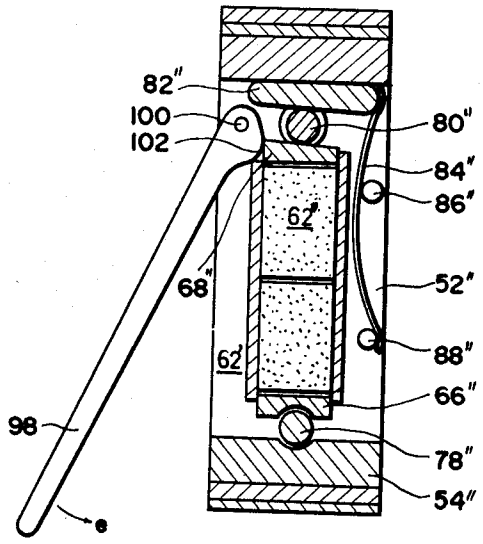

PATENTED JAN 26 1971

3,558,903

SHEET 1 OF 3

Fig. 1.

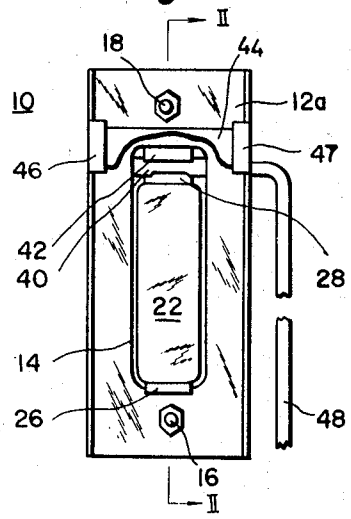

Fig. 2.

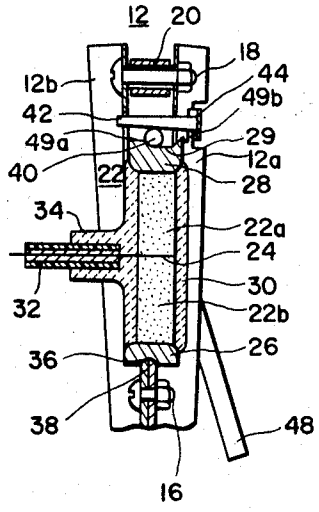

Fig. 3.

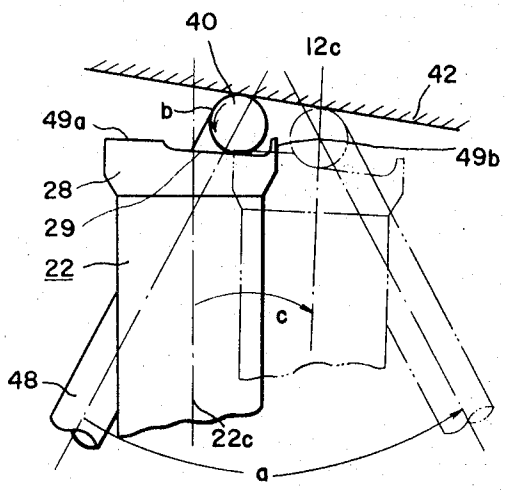

Norihoko Yamano
Inventor

By, Wenderoth, Lind and Ponack,
Attys.

Fig.4.

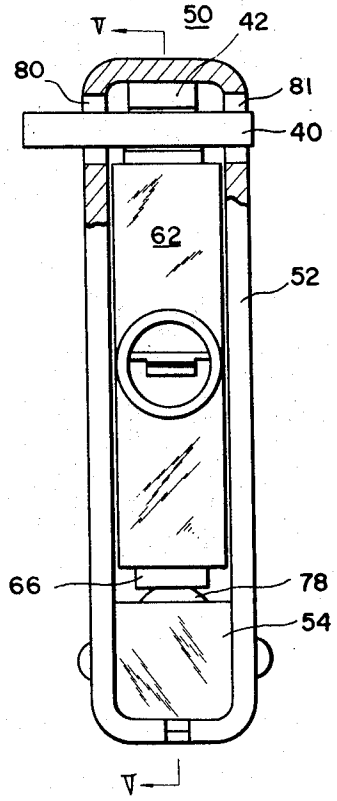

Fig.5.

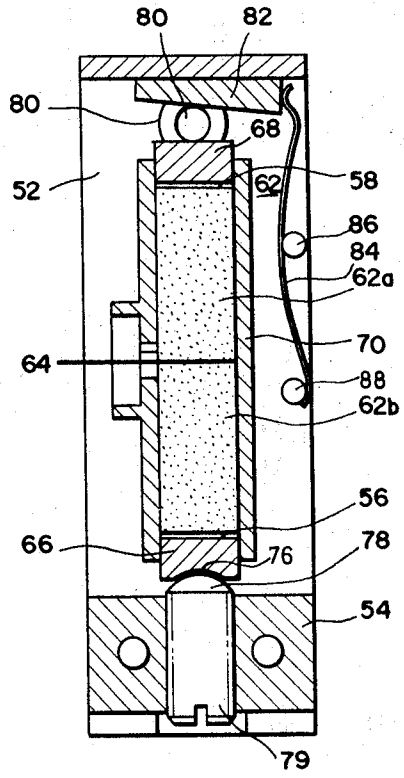

Fig.6.

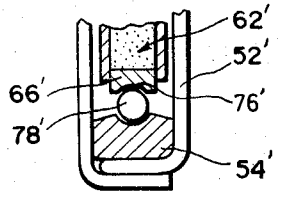

Fig.7.

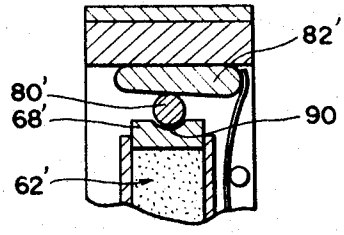

Norihoko Yamano,
Inventor
By, Wenderoth, Lind & Ponack,
Attys.

Fig. 8.

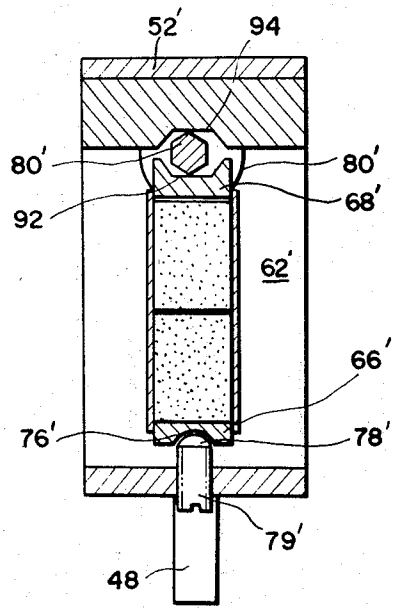

Fig. 10.

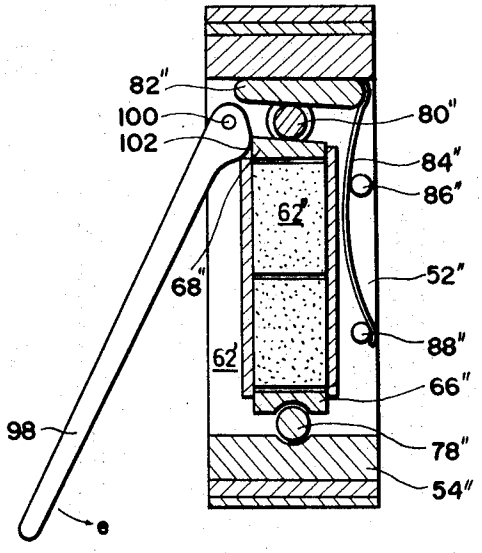

Fig. 9.

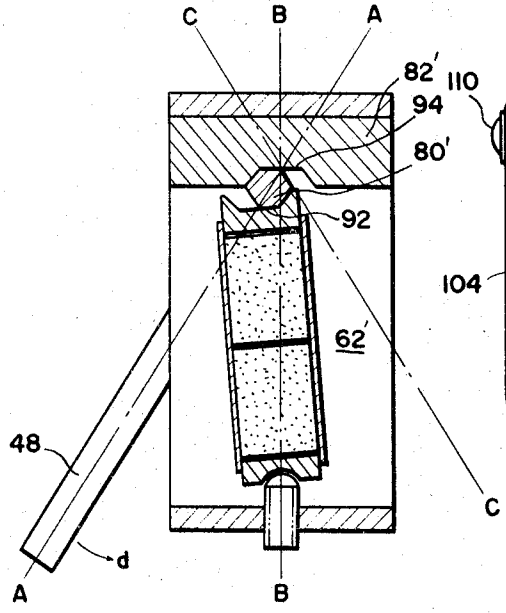

Fig. 11.

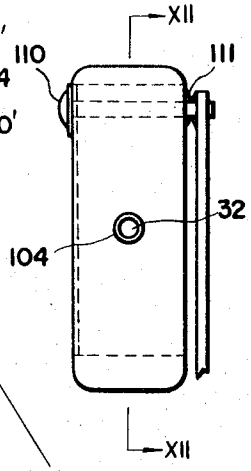

Fig. 12.

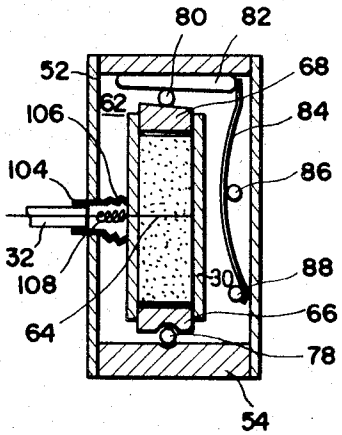

Norihoko Yamano,
INVENTOR.

BY Wenderoth, Lind & Ponack, Attys.

MECHANICALLY ACTUATED PIEZOELECTRIC VOLTAGE SOURCE

This invention relates in general to improvements in piezoelectric voltage sources and more particularly to a mechanism for producing a high voltage in each of the processes of applying a squeezing pressure to a piezoelectric element and of releasing the applied pressure from the element.

The conventional type of piezoelectric voltage sources are disadvantageous in that a ratio of an external force applied to the source to a pressure exerted on the piezoelectric element involved is relatively high, the operation relatively lacks in nimbleness and the mechanism used is complicated and expensive.

An object of the invention is to provide a new and improved mechanism for applying and releasing a pressure to and from a pressure responsive element which is simple and durable in construction, and nimbly and reliably operative with a relatively low operating force.

Another object of the invention is to provide a new and improved piezoelectric voltage source suitable for use in any igniting equipment or any internal combustion engine for purpose of ignition.

Briefly, the invention accomplishes the above cited objects by providing a piezoelectric voltage source comprising housing means, piezoelectric element means pivotably mounted at one end within the housing and having a pressure bearing flat surface rigidly connected to the other end, the housing means being rigid against expansion in the longitudinal direction of the piezoelectric element means, a rigid block including a flat surface opposite the pressure bearing surface to form a space therebetween, an actuating roller rollably sandwiched between both the opposite surfaces, and means for rolling the actuating roller and swinging the piezoelectric element means about the one end thereby to apply and release a squeezing pressure to and from the piezoelectric element means whereupon a high voltage is produced by the piezoelectric element means respectively.

Preferably, the rigid block member may be a wedge-shaped member loaded with spring means to always push the roller against the pressure bearing member, in order to prevent the roller from being loosely carried between the associated planes during service.

While the roller may be advantageously of a circular cross section, it may have, if desired, a cross section in the form of a regular polygon having any desired number of sides such as six, seven, or eight sides. Such a polygonal roller may be conveniently embraced within a pair of opposite identical grooves in the form of a regular trapezium and can exert both a squeeze and an impulsive pressure on the associated piezoelectric element means.

Instead of an external force being applied to the roller, such a force may be advantageously applied directly to the piezoelectric element means to effect swinging movement of the latter accompanied by rolling movement of the associated roller thereby to squeeze the piezoelectric element means.

The invention will become more readily apparent from the following detailed description taken in conjunction with the accompanying drawings in which:

FIG. 1 is a front elevational view of a piezoelectric voltage source constructed in accordance with one embodiment of the invention with parts cut away;

FIG. 2 is a sectional view taken along the line II–II of FIG. 1;

FIG. 3 is a fragmental, schematic side elevational view of the source illustrated in FIGS. 1 and 2 useful in explaining the operation of the invention.

FIG. 4 is a front elevational view, partly in section of a piezoelectric voltage source constructed in accordance with another embodiment of the invention with parts cut away;

FIG. 5 is a sectional view taken along the line V–V of FIG. 4;

FIG. 6 is a fragmental front elevational view in section of another pivotal mounting of a piezoelectric element.

FIG. 7 is a fragmental side elevational view in section of a modification of FIG. 5;

FIG. 8 is a view similar to FIG. 5 but illustrating another modification of the invention;

FIG. 9 is a side elevational view useful in explaining the operation of the mechanism illustrated in FIG. 8;

FIG. 10 is a side elevational view in section of still another embodiment of the invention;

FIG. 11 is a front elevational view of a moistureproof piezoelectric voltage source constructed in accordance with another embodiment of the invention; and

FIG. 12 is a sectional view taken along the line XII–XII of FIG. 11.

The invention is based on the concept that, in the process of rotating an actuating roller movably sandwiched between a pair of opposite planes disposed in tilted relationship to move it in which a space confined by both planes, thus a squeezing pressure is produced in the associated piezoelectric element and also in the process of returning the roller of its original position the applied pressure is released from the piezoelectric element. The invention is characterized in that the piezoelectric element turns or swing about at a pivot at its one end. One of the planes is disposed in fixed relationship with respect to the end face of the element and the planes are tilted to the end element face. Thus the above-mentioned swinging of the element causes the roller to roll up the other plane while at the same time the roller mounts up to the uphill of one plane. This change of in the position of roller relative to both planes applies a high squeezing pressure to the piezoelectric element along its vertical axis, and releases the pressure from the element when the roller is turned in opposite direction. In the case a two piece type piezoelectric element of the conventional construction is used, a high voltage is provided between the central electrode and each of both end terminals each time a squeezing pressure is applied and released to and from the element with the voltage due to the application of the pressure having a polarity opposite to that due to the release thereof.

Referring now to the drawings and FIGS. 1 and 2 in particular, there is illustrated a piezoelectric voltage source constructed in accordance with one embodiment of the invention. The source generally designated by the reference numeral **10** includes a housing **12** comprising a pair of housing portions **12***a* and **12***b* disposed back-to-back into a substantially V shape. Each housing portion **12***a* or **12***b* is preferably made of sheet steel, channel shaped in cross section, and provided on its central plat portion, with a rectangular opening **14** having a dimension dependent upon the size of a piezoelectric element as will be described hereinafter. The pair of housing portions **12***a* and **12** *b* are connected together at one end or the lower ends as viewed in FIGS. **1** and **2**, by a bolt **16** and the associated nut and at the other ends or the upper ends by another bolt **18** and the associated nut with a hollow spacer **20** disposed around the bolt between housing portions. Thus the housing portions are forcedly connected together into a substantially V-shape to form a space therebetween. With the arrangement as above described it will be appreciated that the housing is rigid against longitudinal tensile stress.

Disposed within the space as above described is a piezoelectric crystal element **22** preferably, through not necessarily, comprising a pair of separate pillar shaped elements of any desired cross section **22***a* and **22***b* arranged end-to-end and composed of a polycrystalline ceramic material such as a barium titanate, lead titanate zirconate or the like. As well known, such elements, when squeezed, produce a high voltage and have sufficient storage capacity and internal resistance to hold the charge for a considerable period of time.

The piezoelectric element **22** has an electrode **24** sandwiched between the two elements **22***a* and **22***b* and also a support member **26** and a pressure bearing member **28** secured at its free ends respectively. Both members also serve to act as the other electrode of the piezoelectric element **22**. Thus it will be seen that the two piezoelectric elements **22***a* and **22***b* are mechanically in series and electrically in parallel. The piezoelectric element **22** has a covering layer **30** of any suitable electrically insulating material applied to the surface thereof except for those surface portions contacting the pres-

sure bearing and supporting members **28** and **26** respectively. An electrically insulated cord **32** is electrically connected to the common electrode **24**, and projects beyond the central opening of housing portion **12***b*. The cord **32** is surrounded by an electrically insulating protrusion **34** integral with the insulating layer **30** in order to insure that the cord is held in place and electrically connected to the electrode **24**.

The support member **26** which may be preferably of a special steel is provided on that surface remote from the piezoelectric element **22** with a transverse groove **36** in the form of a segment of a circle whose center lies on the central plane between the opposed housing portions **12***a* and **12***b*. The groove **36** then engages a ridge **38** of complemental shape formed on the connected lower end portions of the housing portions providing the lower edge of the rectangular opening **14** thereby to allow the piezoelectric element **22** to turn or swing about the central line of the groove **36**.

The pressure bearing member **28** made, for example, of a special steel and hardened has an upper free flat surface **29** tilted downwardly at a predetermined angle to the transverse axis of the piezoelectric element **22** for the purpose as will be apparent hereinafter. A roller **40** of circular cross section made of a special steel and hardened is disposed on the pressure bearing surface **29**. A wedge-shaped member **42** slidably fixed on the upper portion of the housing **12** engages the upper edge of the rectangular opening **14** and is normally biased in the direction of its reduced end by a leaf spring **44** carried between the folded sides **46** and **47** of the channel member **12***a*. The wedge-shaped **42** made preferably of steel and hardened is located at such a position that the roller **40** is resiliently sandwiched between the same and the pressure bearing member **28** for rolling movement as well as forming a space as shown in FIG. **3**. The spring loaded wedge member **42** also serves to preventing an actuating mechanism including the pressure bearing member **28**, the roller **40** and the wedge-shaped member **42** from loosening due to wear during a long service.

It is to be noted that, if desired, either the pressure bearing surface **29** or wedge member **42** may not be tilted provided that its opposing surface is tilted to forms the space tapered as above described.

The roller **40** includes one end portion projecting beyond the housing **12** and bent substantially perpendicularly to its original direction providing an operating handle **48**.

In order to limit the rolling movement of the roller **40**, the tilted surface **29** of the pressure bearing member **28** includes ridged end portions **49***a* and **49***b*.

As an example, at least one of the upper surface **29** of the pressure bearing member **28** may be preferably tilted downwardly or upwardly to the transverse axis of the piezoelectric element **22**, at an angle of from 3 to 6 degrees and the roller **42** has a diameter preferably ranging from 2.5 to 4 mm.

The operation of the piezoelectric voltage source **10** illustrated in FIGS. **1** and **2** will now be described in conjunction with FIG. **3** wherein the same reference numerals designate the components corresponding to those shown in FIGS. **1** and **2**. The piezoelectric elements **22** is normally in its position where its central line **22***c* tilts toward the left of the central line **12***c* of the housing **12**. Under these circumstances the operating rod **48** can turn in the direction of the arrow *a* shown in FIG. **3** to force the roller **40** to roll in the direction of the arrow *b* between the flat surfaces **29** and the opposed flat surface the wedge-shaped member **42** while ascending along the surface **29**. This causes the piezoelectric element **12** to turn or swing in the direction of the arrow *c* to its position illustrated at dot-and-dash line in FIG. **3**. In other words, the central line **22***c* of the piezoelectric element **22** tilts toward the right of the central housing line **12***c*. During this transition the roller **40** is gradually pushed against the element **12** lengthwise thereof to tend to shorten the latter while at the same time it rolls and ascends to the higher portion of the tilted surface **42**. This causes a squeezing portion pressure to be applied to the piezoelectric element **22**. At the instant the roller **40** has reached the central line **22***c* of the piezoelectric element it exerts a maximum possible pressure on the element **22** whereupon the roller **40** is arranged to be stopped against the ridged end portion **49***a*.

Then the operating handle **48** can return back to its original position to return the piezoelectric element **22** to its original position shown at solid line in FIG. **3** while the pressure is allowed to be released from the element **22**.

It will be seen that in each of the processes of applying the pressure to the piezoelectric element **22** and of returning the latter to its original position, a change in a compressive strain takes place in the material of the piezoelectric element **22** to provide high voltages of opposed polarities at the go and return across the intermediate electrode **24** and each end of the element and hence each of the pressure bearing and supporting members **28** and **26** with the polarity of the voltage in the process of applying the pressure to the element reversed from that in the process of returning the latter. The high voltage thus produced may be connected across a spark gap formed between electrodes connected to the electric cord **30** and the opposed electrodes connected to the housing **12**, although the spark gap and an electrical connection thereto are not illustrated in FIG. **3**. Therefore a spark discharge occurs across the spark gap and can be utilized to ignite, for example, a pilot gas burner or directly any other gas equipment.

Referring now to FIGS. **4** and **5**, there is illustrated a modification of the invention, wherein a voltage source generally designated by the reference numeral **50** includes a housing **52** composed of a length of any suitable strip material such as steel formed into a substantially rectangular shape with the opposed ends of the strip slightly spaced away from each other and a block **54** of any suitable metallic material for example steel rigidly secured to the inside of the lower or open end housing portion by rivets.

Turnably disposed in the interior of the housing **52** is a piezoelectric element **62** similar to the piezoelectric element **22** and including a central electrode **64** and a support member **66** and a pressure bearing member **68** at respective ends. As shown in FIG. **5**, a pair of thin aluminum plates **56** and **58** are interposed between the both end faces of the piezoelectric element **52** and the supporting and pressure bearing members **66** and **68** respectively. The thin plates **56** and **58** establish electrical ground connections for the piezoelectric element **62** and also serve to uniformly distribute compressive forces acting upon end faces of the piezoelectric elements **62***a* and **62***b*.

The support member **66** is provided on the free or lower surface with a central recess **76** in the form of a spherical segment pivotably engaging a complemental head **78** of a screw **79** screwed into the block **54**. Thus recess **76** and the screw head **78** provide a sphere and socket joint allowing the piezoelectric element **64** to swing about it. The screw **79** also serves to compensate for a variation in length of the associated element **62** during the assembling operation.

A roller **80** of the circular cross section extends through a pair of aligned openings **80** and **81** formed on the opposed portions of the housing **52** and is rollably sandwiched between the pressure bearing member **68** and a wedge-shaped member **82** secured to the upper inner end face of the housing **52**. The diameters of the openings **58** and **81** are selected to limit the rolling movement of the roller **80** and accordingly the ridged end portions **49***a* and **49***b* on the upper bearing surface **29** shown in FIG. **2** are omitted. The wedge-shaped member **82** engaging the roller **80** is normally urged longitudinally in the direction of its reduced end by the action of a leaf spring **84** disposed within the housing **52** and engaging a pair of pins **86** and **88** planted on the latter. In FIGS. **4** and **5** it is noted that the use of a ball and socket coupling **76–78** serves to effect smooth swinging movement of the piezoelectric element **22** as well as its mechanism itself is robust, leading to increasing the durability.

FIG. **6** wherein the components corresponding a similar to those shown in FIGS. **4** and **5** are designated by the same

reference numerals with the prime, illustrates a modification of a pivotal mounting of a piezoelectric element **62'**. Instead of the screw **79** being used, a metallic block **54'** such as the block **54** shown in FIGS. **4** and **5** is provided at the center with a recess complemental in shape to a steel ball **78'**. This ball is **78'** is operatively coupled to a recess **76'** complemental in shape to the ball **78'** and formed on a support member **66'**. The coupling just described allows the piezoelectric element **62'** to swing in a smoother manner as compared with the arrangement shown in FIGS. **4** and **5**.

FIG. **7** wherein the components corresponding or similar to those shown in FIGS. **4** and **5** are designated by like reference numerals primed, illustrates another manner in which a roller is rollably carried on the upper surface of a pressure bearing member. As shown in FIG. **7**, a pressure bearing member **68'** is provided on the upper surface with a central transverse groove **90** of circularly arcuated cross section whose radius approximates a radius of a roller **80'** arranged to engage the groove **90** and whose center lies in the central plane of a piezoelectric element **62'** about which the latter is turnable. When the roller **80'** has supplied thereto a rotational force, it will be sliding in the groove **90** while rolling relative to both a wedge-shaped member **82** upwardly contacting it and the pressure bearing member **68'** fixed to the element **62'**. Thereby the associated piezoelectric element **62'** is swing and squeezed.

The arrangement shown in FIG. **7** is characterized in that the roller **80'** occupies its position always lying in central plane of the piezoelectric element **62'** thereby to apply to the latter a force always directed in that plane resulting in an increase in ratio of conversion of mechanical to electrical energy.

Referring now to FIGS. **8** and **9** wherein the components corresponding or similar to those shown in FIGS. **4** and **5** are designated by the same reference numerals primed, a roller **80'** for actuating a piezoelectric element **62'** is of regular hexagonal cross section. It is to be noted that a regular polygon may have any desired number of sides. For example, it may be seven or eight sided.

A pressure bearing member **68'** is provided on its operating surface with a transverse groove **92**, in the form of an equal sided trapezoid with its longest side open and with each lateral side having slope conforming to an angle formed between adjacent sides of the polygonal cross section of the roller involved. Instead of the wedge-shaped member **42** or **82** used in the previous embodiments, a rigid block **82'** made for example of a special steel is fixed in one portion, in this case, the upper end portion as viewed in FIG. **8** of a housing **52'** and is provided on the lower surface facing the pressure bearing member **68'** with a transverse groove **94** identical in shape and in registering and cooperating position with the recess **92** on the pressure bearing member **68'**. The roller **80'** is rollably embraced in both recesses **92** and **94**. In the other respects the arrangement shown in FIGS. **8** and **9** is substantially similar to that illustrated in FIGS. **4** and **5**.

In operation, an operating handle **48** can be manually rotated in the direction of the arrow *d* from its position designated at solid line or represented by dot-and-dash line A–A to roll the roller **80'**. This rolling movement of the roller **80'** causes the distance between both bottom recess surfaces to progressively increase thereby to apply a high axial force to the piezoelectric element **62'** while swinging the latter about its ball and socket joint **76'—78'**. During this rotational movement of the operating handle **48** as reaching the central plane B–B of the device (FIG. **9**) permits the roller **80'** to apply a maximum squeezing force to the piezoelectric element **62'** now located in its position as shown in FIG. **8**. As soon as the handle **48** has passed through the central plane B–B the resilience of the piezoelectric element **62'** causes the handle **48** to be rapidly moved to its position represented by dot-and-dash line C–C and substantially symmetrical to its original position with respect to the central plane B–B. This causes the applied squeezing force to be rapidly released from the piezoelectric element **62'**. Therefore, it may be said that the operating handle **48** is stable when it is on line A–A or C–C whereas it is unstable in its position represented by line B–B.

Thus it will be appreciated that the operating handle **48** is operated in approximately stepped manner and especially in the process in which the force is released from the piezoelectric element, a rate of decrease in applied pressure with respect to time is large as compared with the roller of circular cross section. This is accompanied by the effect that the operating handle pulses the piezoelectric element while it still squeezes the latter. From the above reasons it will be understood that the arrangement shown in FIGS. **8** and **9** is especially suitable for use in producing repeated spark discharges with a high density.

While the invention has been described in terms of the roller or the associated operating handle being operated means of an external force to squeeze the piezoelectric element, it is to be understood that an external force may be directly applied to the piezoelectric element to squeeze it with satisfactory results. This will be subsequently described in conjunction with FIG. **10**.

In FIG. **10** wherein the components corresponding or similar to those shown in FIGS. **4** and **5** are designated by the same reference numerals primed, a housing **52''** has pivotably mounted at **100** thereto, a lever **98** provided with an operating nose **102** adapted to abut against one side of a pressure bearing member **68''**. The lever **98** can be manually pushed in the direction of the arrow *e* to swing a piezoelectric element **62''** about the center of a steel ball **78''**. This swinging movement of the piezoelectric element **62''** causes the roller **80''** to roll between the pressure bearing member **68''** and a wedge-shaped member **82''** to squeeze the piezoelectric element leading to the generation of a high voltage.

As will be appreciated, the present piezoelectric voltage sources may be used in kitchens where it is relatively high in humidity or splashed with water, for the purpose of igniting gas ranges. Under these circumstances it is required to prevent any leakage of a voltage output from the source due to the ambient moisture.

FIGS. **11** and **12** show the moistureproof type of the present device. A housing **52** is in the form of a closed box and has, hermetically sealed therethrough, an electric cord **32** electrically connected to an electrode **64** of a piezoelectric element **62**. In order to insure that any moisture is prevented from entering the interior of the box **52** through a clearance between exit of the electric cord and the adjacent portion of the housing a coating **104** of any suitable electrically insulating material is applied to the exit of the cord **32** and extends in the form of a bellows **106** into the housing until it is connected to an electric insulation **30** disposed on the piezoelectric element **62**. The bellows type covering **106** can effectively accommodate any lateral displacement of the piezoelectric element **62**. Similarly the electric cord **32** is electrically connected to the electrode **64** through a flexible lead **108**.

Further a pair of openings, provided on the opposed portions of the housing **52** to limit movement of a roller **80**, is provided with closure covers **110** and **111** respectively in order to prevent any ingress of moisture therethrough.

In this way the device illustrated in FIGS. **11** and **12** has the completely closed interior and is protected against any deterioration of electric insulation due to the ingress of moisture as well as providing a dust tight structure. In the other respects the arrangement is similar to that illustrated in FIGS. **4** and **5** and the same reference numerals designate the components corresponding or similar to those illustrated in FIGS. **4** and **5**.

The invention has several advantages. For example, the present voltage source can not only be operated with a very low operating force because the piezoelectric element effects swinging movement but also it is extremely effective for generating a continuous multispark by having a high squeezing pressure applied to the piezoelectric element. The use of a spring loaded wedge-shaped member fully compensates for any looseness of the mechanism for applying a squeezing pres-

sure to the piezoelectric element which may take place during service. In addition the invention is extremely simple in construction because of the omission of a bearing associated with the roller or its operating handle.

While the invention has been illustrated and described in conjunction with certain preferred embodiments thereof it is to be understood that numerous changes and modifications may be resorted to without departing from the spirit and scope of the invention. For example, in order to ignite an internal combustion engine, the present voltage source may be operated by any suitable cam mechanism suitably coupled to the rotary shaft of the engine.

I claim:

1. in a piezoelectric voltage source, the combination of housing means, piezoelectric element means including an elongated ceramic piezoelectric element, a support member secured to one end thereof, a pressure receiving member secured to the other end thereof, and a covering of an electrical insulating material disposed on the surface thereof, said housing means being rigid against expansion in the longitudinal direction of said piezoelectric element means, said support member being in pivotal engagement with said housing means for pivotably supporting said piezoelectric element means within said housing means, said pressure bearing member including a flat surface, a wedge-shaped abutment member slidably mounted within said housing means for sliding in a direction perpendicular to the longitudinal direction of said piezoelectric element means, said abutment member having an abutment surface opposite said flat surface and spaced from said flat surface such that, with the parts at rest in nonvoltage producing positions, a wedge-shaped space is formed between said flat surface and the opposed surface, an actuating roller having a circular cross section rollably sandwiched in said wedge-shaped space, and a mechanical cam engaged with said piezoelectric element means to swing said piezoelectric element means, thereby rolling said actuating roller toward and then away from the smaller end of said wedge-shaped space and thereby to apply and release squeezing pressure to and from said ceramic piezoelectric element, whereupon a high voltage is produced by said piezoelectric element.