(12) INTERNATIONAL APPLICATION PUBLISHED UNDER THE PATENT COOPERATION TREATY (PCT)

(19) World Intellectual Property Organization
International Bureau

(43) International Publication Date
13 February 2014 (13.02.2014)

WIPO | PCT

(10) International Publication Number
WO 2014/026024 A1

(51) International Patent Classification:
*E04C 5/16* (2006.01) *B28B 23/00* (2006.01)
*E04G 21/12* (2006.01)

(21) International Application Number:
PCT/US2013/054178

(22) International Filing Date:
8 August 2013 (08.08.2013)

(25) Filing Language: English

(26) Publication Language: English

(30) Priority Data:
2012211412 8 August 2012 (08.08.2012) AU

(71) Applicant: **ILLINOIS TOOLS WORKS INC.** [US/US]; 3600 West Lake Avenue, Glenview, IL 60026 (US).

(72) Inventors: **CONNELL, Robert, Urquhart**; 90B Eskdale Road, North Caufield, Victoria 3161 (AU). **KNOTT, Alexander, Charles**; Unit 1, 1A Kingsley Street, Elwood, Victoria 3174 (AU). **BARRACLOUGH, Andrew, Saul**; 24 Anthony Street, Langwarrin, Victoria 3910 (AU).

(74) Agent: **HAUPTMAN, Benjamin, J.**; Lowe Hauptman Ham & Berner, LLP, 2318 Mill Road, Suite 1400, Alexandria, Virginia 22314 (US).

(81) Designated States *(unless otherwise indicated, for every kind of national protection available)*: AE, AG, AL, AM, AO, AT, AU, AZ, BA, BB, BG, BH, BN, BR, BW, BY, BZ, CA, CH, CL, CN, CO, CR, CU, CZ, DE, DK, DM, DO, DZ, EC, EE, EG, ES, FI, GB, GD, GE, GH, GM, GT, HN, HR, HU, ID, IL, IN, IS, JP, KE, KG, KN, KP, KR, KZ, LA, LC, LK, LR, LS, LT, LU, LY, MA, MD, ME, MG, MK, MN, MW, MX, MY, MZ, NA, NG, NI, NO, NZ, OM, PA, PE, PG, PH, PL, PT, QA, RO, RS, RU, RW, SA, SC, SD, SE, SG, SK, SL, SM, ST, SV, SY, TH, TJ, TM, TN, TR, TT, TZ, UA, UG, US, UZ, VC, VN, ZA, ZM, ZW.

(84) Designated States *(unless otherwise indicated, for every kind of regional protection available)*: ARIPO (BW, GH, GM, KE, LR, LS, MW, MZ, NA, RW, SD, SL, SZ, TZ, UG, ZM, ZW), Eurasian (AM, AZ, BY, KG, KZ, RU, TJ, TM), European (AL, AT, BE, BG, CH, CY, CZ, DE, DK, EE, ES, FI, FR, GB, GR, HR, HU, IE, IS, IT, LT, LU, LV, MC, MK, MT, NL, NO, PL, PT, RO, RS, SE, SI, SK, SM, TR), OAPI (BF, BJ, CF, CG, CI, CM, GA, GN, GQ, GW, KM, ML, MR, NE, SN, TD, TG).

**Published**:
— *with international search report (Art. 21(3))*

(54) Title: REBATE FORMWORK SYSTEM FOR SLIP FORM CASTING

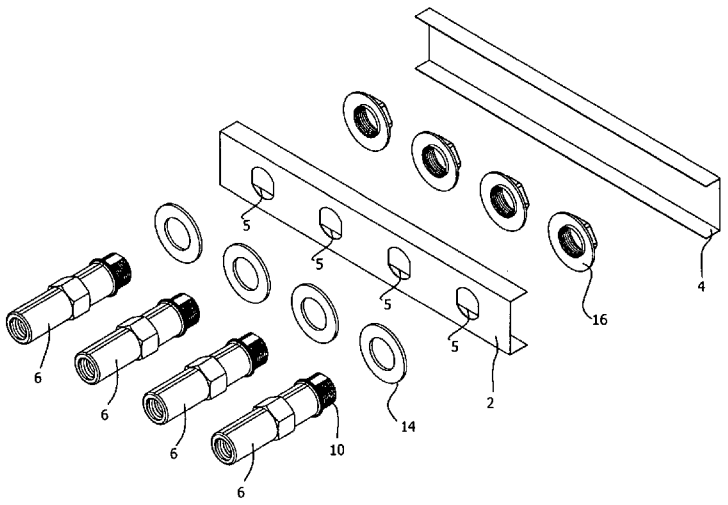


**Figure 1**

(57) Abstract: A formwork system for forming a rebate in the face of a core produced by slip form casting, the system comprising a rebate form comprising a rear part (2) defining a hollow interior and a forward part (4) applicable to the rear part (2) to close the hollow interior from the front, reinforcing bar couplers (6, 8) each having an outer end portion projecting into the interior of the form, each coupler (6, 8) being engaged with the rear part (2) of the form by a clamping nut (16) engaged with an externally threaded surface (10) at the outer end portion of the coupler (6, 8), and means for closing open outer ends of the couplers (6, 8) within the hollow interior of the form and being removable after casting to expose the open ends.

WO 2014/026024 A1

# REBATE FORMWORK SYSTEM FOR SLIP FORM CASTING

## BACKGROUND OF THE INVENTION

### 1. Field of the Invention

**[0001]** The present invention relates to a rebate formwork system for use in slip form casting central cores of high rise buildings.

### 2. Description of the Prior Art

**[0002]** As is well known in the construction industry, the central core of a high rise building is conventionally constructed by a slip form casting process by which successive stages of the core are formed, typically with each stage corresponding to one storey of the building. The central core forms the principal structure of the building from which the individual floors are cantilever mounted. It typically acts as the structure for containing lifts, fire escape stairs, and service ducts.

**[0003]** When each storey is cast, it is conventional to form along the outer side of the core a rebate into which will be cast the inner end of a floor slab at that level. The rebate is defined by a form of appropriate cross-section and which acts in conjunction with the main formwork. Accommodation has to be made for reinforcement which needs to extend from the core at the level of the rebate in order to subsequently tie into the reinforcement for the cast floor slab.

**[0004]** One system in current use provides reinforcement which is cast into the core, but because of the presence of the main formwork and rebate form during casting, the part of the reinforcement which is to project from the core needs to be bent to lie along the interior of the rebate form. For this purpose, the rebate form is of hollow or box-like construction so as to receive the bent lengths of reinforcement. The subsequent actions of straightening the reinforcement after casting and to set the reinforcement in the correct configuration for use, are quite time-consuming. In addition the initial bending and subsequent straightening can lead to reduced ductility of the reinforcement which is

undesirable and difficulties are sometimes encountered in ensuring that the ductility remains within prescribed limits. On occasions, workers may re-bend a straightened reinforcement to move it away while other activities take place and then to straighten the reinforcement a further time and this can result in shearing of the reinforcement or at least it can lead to substantial weakness.

## SUMMARY OF THE INVENTION

**[0005]** The present invention in its preferred embodiment relates to a rebate formwork system using reinforcing bar couplers installed in a manner which provides significant ease in use.

**[0006]** According to the present invention there is provided a formwork system for forming a rebate in the face of a core produced by slip form casting, the system comprising a rebate form comprising a rear part defining a hollow interior and a forward part applicable to the rear part to close the hollow interior from the front, reinforcing bar couplers each having an outer end portion projecting into the interior of the form, each coupler being engaged with the rear part of the form by a clamping nut engageable with an externally threaded surface at the outer end portion of the coupler, and means for closing open outer ends of the couplers within the hollow interior of the form and being removable after casting to expose the open ends.

**[0007]** In one preferred embodiment, the means for closing the outer ends of the couplers comprises a strip of adhesive tape which is applied across the open outer ends of the couplers within the form. In another preferred embodiment, the means for closing the outer ends of the couplers comprises a removable end wall of each of the clamping nuts.

**[0008]** Preferably each coupler has a flange or shoulder at or adjacent the rear end of the external thread to provide an abutment surface which lies externally of the rear part of the form and against which a wall of the rear part of the form is clamped by application of the nut.

**[0009]** The present invention also provides a coupler for use in the system defined above, wherein the coupler is internally-threaded and open at at least its outer end for threaded engagement with reinforcement, the coupler at its outer end portion being externally threaded for receipt of the clamping nut and having an externally-projecting flange or shoulder at or adjacent the inner end of the external thread to provide the abutment surface.

**[00010]** These couplers also have utility in other aspects of concrete construction.

**[00011]** The present invention also provides a rebate form for use in the system defined above, the form comprising a rear part which provides a hollow interior and a forward part applicable to the rear part to close the hollow interior from the front, the rear part being formed with apertures through which the threaded forward end portions of the couplers can extend to lie within the interior of the form.

## BRIEF DESCRIPTION OF THE DRAWINGS

**[00012]** Embodiments of the invention will now be described by way of example with reference to the accompanying drawings in which:

**[00013]** Figure 1 is an exploded perspective view of a rebate formwork system in accordance with an embodiment of the invention and having reinforcing bar couplers open at their outer and inner ends for engagement with reinforcement;

**[00014]** Figure 2 is a section showing the rebate form coupled to reinforcement within a central core in preparation for casting;

**[00015]** Figure 3 is an enlarged detail of Figure 2 to show the clamped mounting of the outer end portion of a coupler within the rebate form;

**[00016]** Figure 4 is an exploded perspective view showing the rebate form used in conjunction with couplers in the form of internally-threaded footed ferrules;

**[00017]** Figure 5 shows the rebate form of Figure 4 in its assembled state;

**[00018]** Figure 6 is a perspective view showing an alternative form of nut for clamping the end portion of the coupler within the rebate form; and

**[00019]** Figure 7 is a cross section corresponding to Figure 6.

## DESCRIPTION OF THE PREFERRED EMBODIMENTS

**[00020]** With reference to Figures 1 to 3, the preferred embodiment of the invention provides a box for forming the rebate and carrying couplers for reinforcing bar. The box itself is similar to that currently used with bend-out bars and comprises a rear part 2 of channel form and a forward part 4 also of channel form which fits within the rear part and acts as a closure or cap during casting. The base wall of the rear part of the box is formed with apertures 5 to receive the outer ends of couplers 6 for reinforcement. In the particular embodiment shown, the couplers 6 are of the type having an internal coarse thread (see Figure 3) opening onto both ends whereby the inner end of the coupler can be screwed onto reinforcing rod of appropriate type within the central core prior to casting as shown in Figure 2 and, after casting reinforcing rod can be screwed into the exposed outer end of the coupler within the rebate formed during casting by the box. However, the coupler may alternatively be in the form of an internally-threaded ferrule open at its outer end and closed at its inner end. This is shown in Figures 4 and 5 in which the ferrule, designated 8, is of the type having an enlarged foot portion for anchorage within the core following casting. The ferrules 8 may also be tied into the reinforcement of the core in a conventional manner.

**[00021]** With particular reference to Figure 3, the couplers 6, 8 used in the preferred embodiments of the invention differ from equivalent couplers in current use in that the outer end portion of the coupler is formed with an external thread 10 and with a flange or shoulder 12 forming an abutment surface at or adjacent the base of the thread. A large diameter washer 14 is fitted over the outer end to lie against the flange or shoulder 12 and when the outer end of the coupler is located within the box by passage through the

aperture 5 it is secured in position by the application of a flanged nut 16 onto the external thread 10 so that the outer end of the coupler is firmly fixed to the rear part of the box by clamping of the base wall between the flange of the nut and the rear washer as is clearly shown in Figure 3. The box is formed from relatively thin gauge metal and in order to ensure firm anchorage of the outer end of the coupler within the box, the rear washer and the flange on the nut are of relatively large diameter to ensure adequate distribution of the clamping load and in the embodiment shown their diameters are approximately equivalent to the internal width of the box. The flanged nut is preferably of moulded plastic which will provide adequate clamping load to retain the coupler during casting and to retain the rear part of the box following casting.

**[00022]** Although application of the forward part or cap 4 of the box does shield the interior of the box to a substantial extent against ingress of slurry during casting nevertheless minor amounts of slurry can enter for example through the open ends of the box where adjacent boxes abut and in order to prevent ingress of slurry into the interior of the couplers within the box a strip of adhesive tape 18 is applied across the open ends of the row of couplers within the box. While this is one preferred method as it provides a simple means for temporarily closing the outer ends of the couplers and is removable from the entire row in a single action, there are alternatives as will now be described.

**[00023]** In the modified arrangement shown in Figures 6 and 7 the flanged nut 16 is formed with an integral end wall 20 which spans and thereby encloses the open end of the coupler 6, 8. The end wall 20 is of circular shape, in other words disc-shaped, and is integrally coupled to the remainder of the nut by a thin-walled annular web 22 defining a weakened zone. The end wall 20 also includes an integral ring-pull or other tab 24 whereby after casting, the end wall 20 can be removed to expose the interior of the coupler by pulling the tab 24 which will cause the end wall to separate from the remainder of the nut by tearing around the thin-walled web 22. Advantageously, the interior face of the separable end wall 20 includes an inwardly-projecting annular lip 26 which engages against an interior chamfer at the outer end of the coupler to provide a secondary seal against possible ingress of slurry into the interior of the coupler. In this regard particularly

in the case of couplers of the type shown in Figure 3, it is likely that the entire coupler including the external thread will be of cast construction. The casting process will inevitably leave an external flash on the casting and which will extend along the length of the thread at opposite sides. That flashing must be removed from the thread and will result in flats being formed along the thread on opposite sides whereby the thread will be interrupted rather than continuous; accordingly there is in principle a risk, albeit a relatively low risk that some slurry could pass into the interior of the coupler by passage between the flanged nut and the base wall of the box and along the interrupted zones of the thread and this is avoided by the presence of the secondary seal provided by the annular lip 26. In an alternative to use of the pull tab 24, the central part of the end wall bounded by the sealing lip 26 is connected to the remainder of the end wall by an annular zone of weakness whereby the central part can be pushed into the interior of the coupler to expose the interior after casting.

**[00024]** In yet a further alternative, the outer ends of the couplers could be closed by removable plastic plugs which seal into their outer ends.

**[00025]** The rebate form is intended to be supplied to customers in an assembled state with the couplers clamped to the box at their outer ends which are closed by the removable tape or other easily removable closure. The rebate form is supplied in standard lengths, perhaps several different standard lengths, and while the embodiments illustrated have four couplers clamped to the box it will be understood that there could be more than or less than four according to requirements.

**[00026]** In the setting up of the overall formwork for casting, the caps of the boxes of the rebate forms are attached to the main formwork such as by nailing so that when the main formwork is removed following casting, the caps of the rebate boxes will be pulled off to expose the outer ends of the couplers within the boxes and thus within the rebate formed by the boxes. Removal of the tape or other temporary closures will expose the open outer ends of the couplers in preparation for the next stage of construction.

**[00027]** Although the couplers described herein with external thread and associated flange or shoulder have significant utility as a part of the described rebate formwork system, they also have utility in other applications such as to provide a tight screwed connection to a void former or formwork other than rebate formwork, to provide an external thread for a nut to attach other steel connectors, to provide engagement of a connector externally swaged onto the thread and, in the particular case of couplers of the type shown in Figures 1 to 3, a coupling for converting the coarse thread used for receiving reinforcing bar into a metric or other thread. The nuts of the form shown in Figures 6 and 7 may also have utility with the couplers in these other applications.

**[00028]** The embodiments have been described by way of example only and modifications are possible within the scope of the invention.

## CLAIMS

1. A formwork system for forming a rebate in the face of a core produced by slip form casting, the system comprising a rebate form comprising a rear part defining a hollow interior and a forward part applicable to the rear part to close the hollow interior from the front, reinforcing bar couplers each having an outer end portion projecting into the interior of the form, each coupler being engaged with the rear part of the form by a clamping nut engageable with an externally threaded surface at the outer end portion of the coupler, and means for closing open outer ends of the couplers within the hollow interior of the form and being removable after casting to expose the open ends.

2. A system according to claim 1, wherein the means for closing the outer ends of the couplers comprises adhesive tape which is removable after casting.

3. A system according to claim 2, wherein the outer ends of the couplers lie within a row within the hollow interior of the form and the outer ends of the couplings are closed by a strip of adhesive tape applied across the ends of the row.

4. A system according to claim 1, wherein the means for closing the outer ends of the couplers comprises a removable end wall of each of the clamping nuts.

5. A system according to claim 4, wherein the removable end wall is of disc shape and is integrally coupled to the remainder of the nut by an annular zone of weakness, the end wall having an integral pull which can be grasped to remove the end wall at the zone of weakness.

6. A system according to any one of claims 1 to 5, wherein each coupler has a flange or shoulder at or adjacent the rear end of the external thread to provide an abutment surface which lies externally of the rear part of the form and against which a wall of the rear part of the form is clamped by application of the nut.

7. A system according to claim 5, wherein the nut has an integral external flange

engageable against an inner surface of the wall and a washer is mounted on the outer end portion of the coupling externally of the rear part of the form to lie between the external surface of the wall and the abutment surface of the coupler.

8. A system according to any one of the preceding claims, wherein the coupler is internally-threaded and open at each end for threaded engagement with reinforcement.

9. A system according to any one of claims 1 to 7, wherein the coupler is in the form of an internally-threaded ferrule closed at its inner end and open at its outer end for threaded engagement with reinforcement.

10. A coupler for use in a system according to claim 1, wherein the coupler is internally-threaded and open at at least its outer end for threaded engagement with reinforcement, the coupler at its outer end portion being externally threaded for receipt of the clamping nut and having an externally-projecting flange or shoulder at or adjacent the inner end of the external thread to provide an abutment surface whereby the coupler can be clamped to the rear part of the form by a clamping action between the nut and the abutment surface.

11. A coupler according to claim 10, wherein the coupler is open at its outer and inner ends for threaded engagement with reinforcement.

12. A coupler according to claim 10, wherein the coupler is the form of an internally-threaded ferrule configured for threaded engagement with reinforcement at its outer end and closed at its inner end.

13. A rebate form for use in a system according to any one of claims 1 to 7, the form comprising a rear part which provides a hollow interior and a forward part applicable to the rear part to close the hollow interior from the front, the rear part being formed with apertures through which the threaded forward end portions of the couplers can extend to lie within the interior of the form.

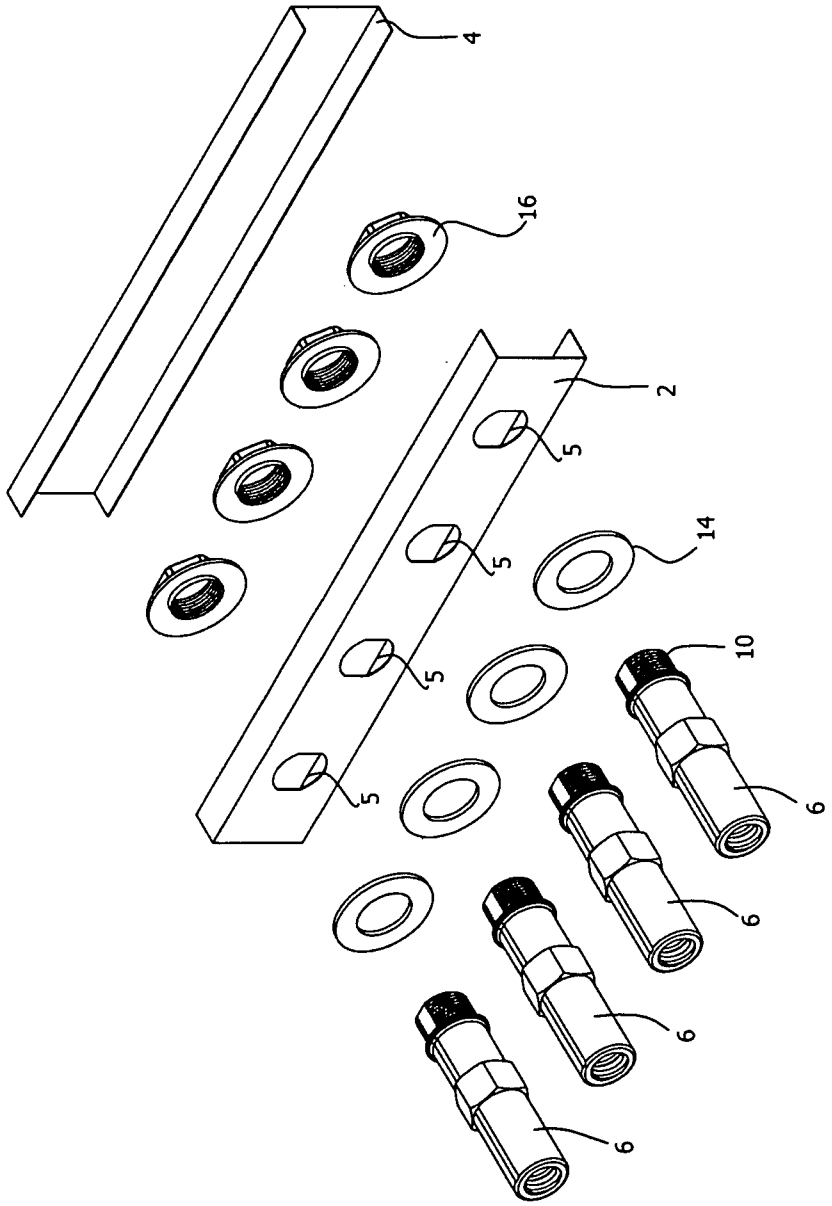


Figure 1

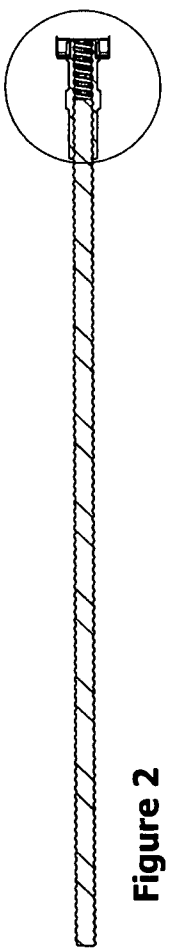

Figure 2

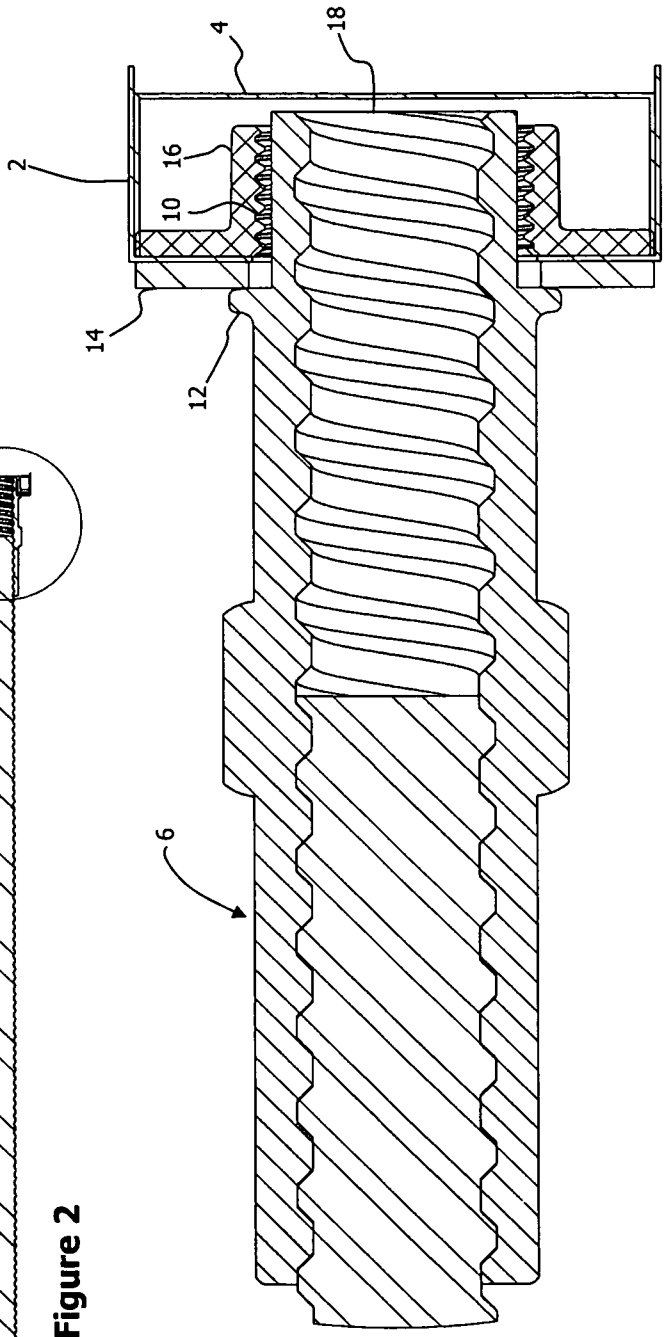


Figure 3

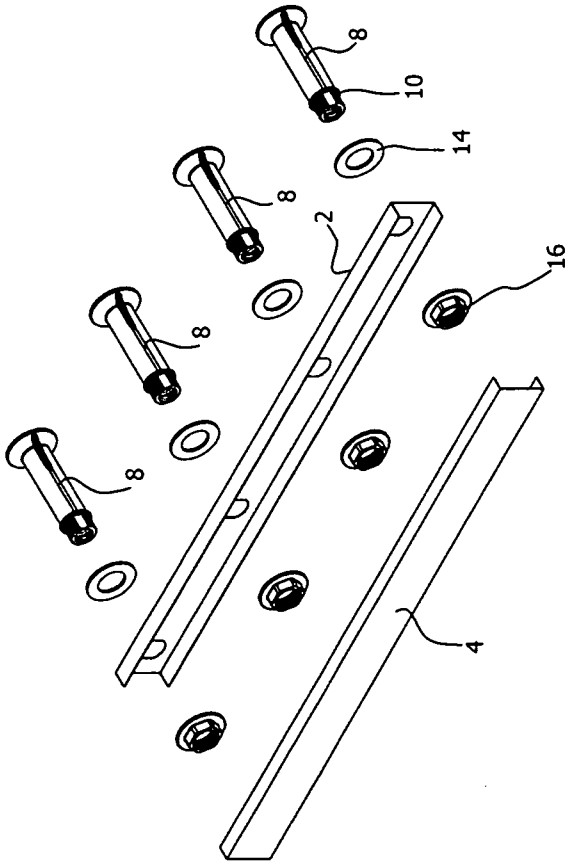


Figure 5

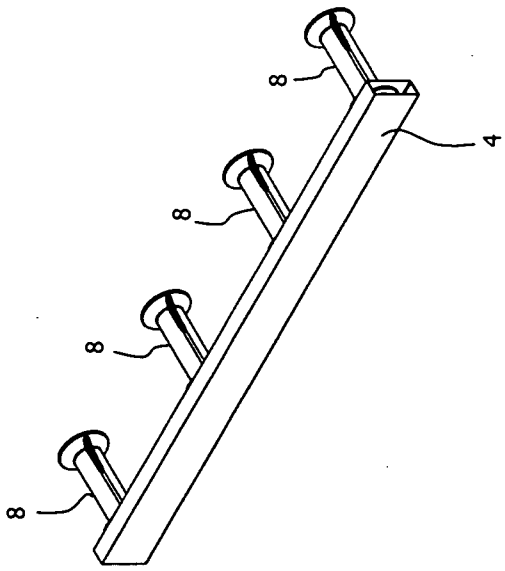


Figure 4

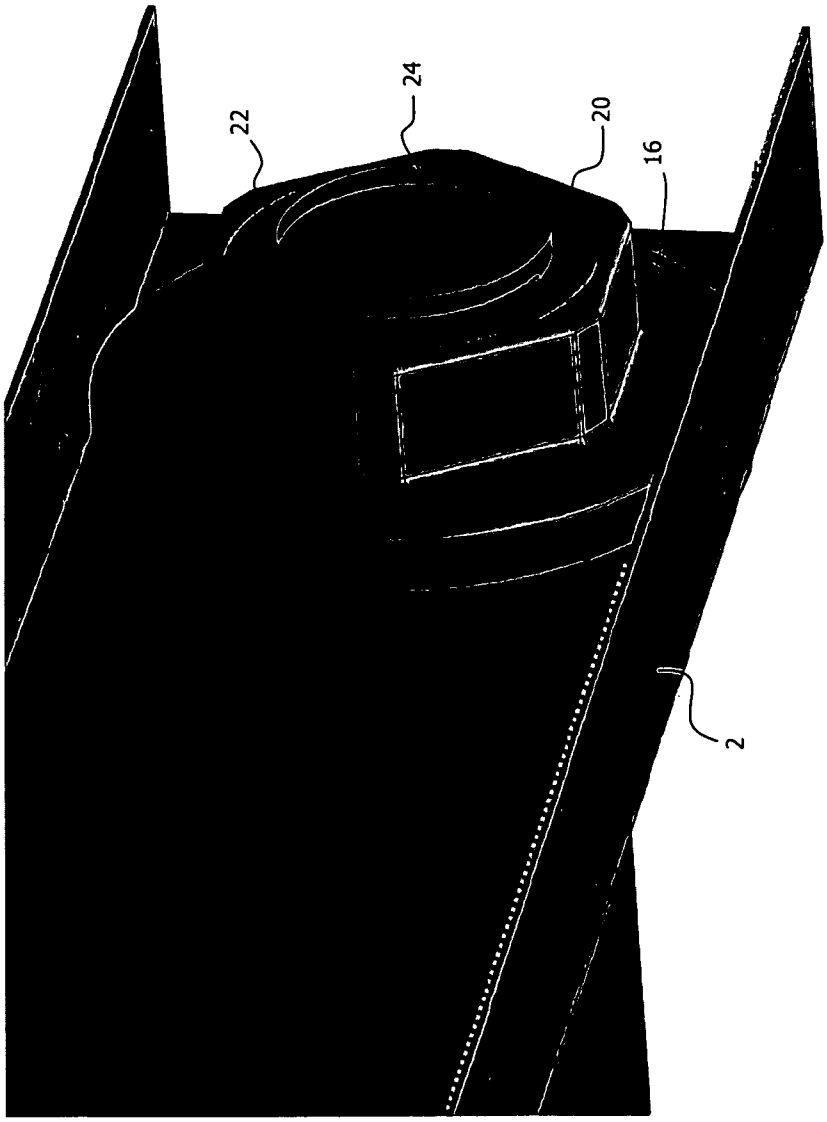


Figure 6

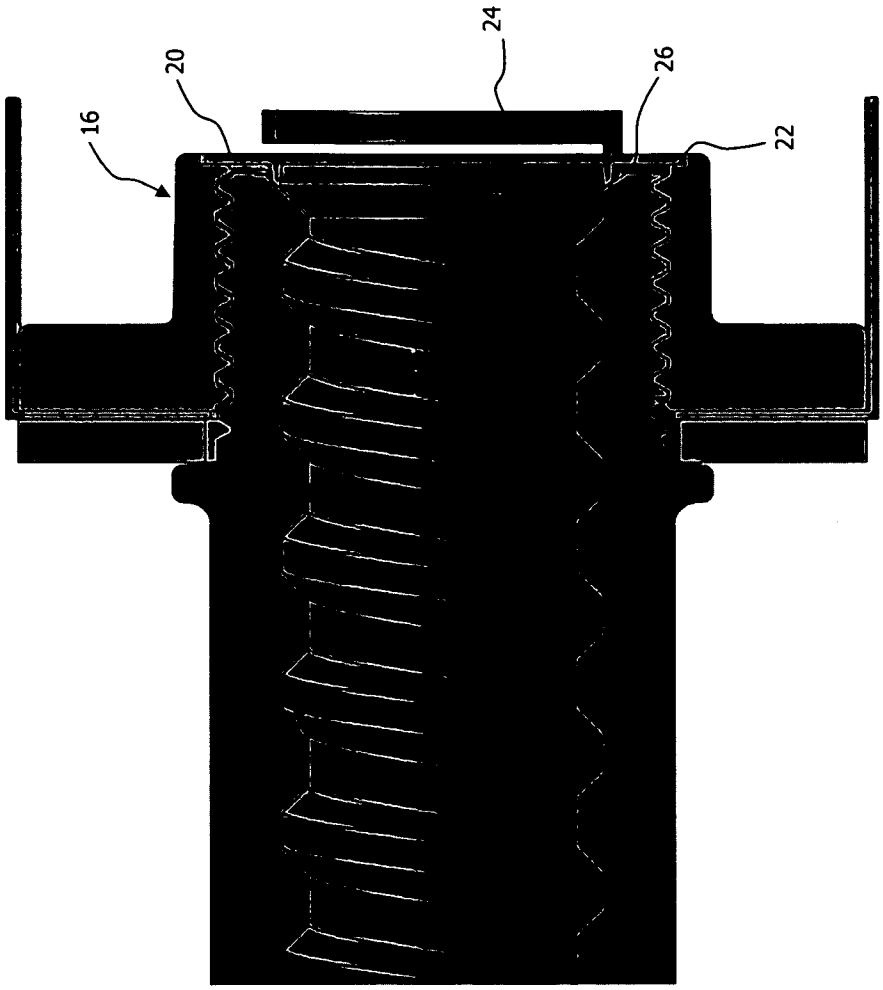


Figure 7

# INTERNATIONAL SEARCH REPORT

International application No
PCT/US2013/054178

A. CLASSIFICATION OF SUBJECT MATTER
INV. E04C5/16 E04G21/12 B28B23/00
ADD.

According to International Patent Classification (IPC) or to both national classification and IPC

B. FIELDS SEARCHED

Minimum documentation searched (classification system followed by classification symbols)
E04C E04G B28B

Documentation searched other than minimum documentation to the extent that such documents are included in the fields searched

Electronic data base consulted during the international search (name of data base and, where practicable, search terms used)
EPO-Internal, WPI Data

C. DOCUMENTS CONSIDERED TO BE RELEVANT

| Category* | Citation of document, with indication, where appropriate, of the relevant passages | Relevant to claim No. |
|---|---|---|
| X | DE 37 37 645 A1 (SCHAEFER HORST [DE]) 24 May 1989 (1989-05-24) figure 3 | 1-13 |
| X | EP 0 121 510 A2 (MEYERS CLAUDE) 10 October 1984 (1984-10-10) figures 1-3 | 1-13 |
| A | WO 95/16140 A1 (OIKE & CO [JP]; OIKE ETSUJI [JP]) 15 June 1995 (1995-06-15) figure 9 | 1,4,9,12 |
| A | US 2011/302880 A1 (DIPIETRO MICHAEL [US]) 15 December 2011 (2011-12-15) figure 1 | 1,4,5 |

☐ Further documents are listed in the continuation of Box C.

☒ See patent family annex.

* Special categories of cited documents :

"A" document defining the general state of the art which is not considered to be of particular relevance

"E" earlier application or patent but published on or after the international filing date

"L" document which may throw doubts on priority claim(s) or which is cited to establish the publication date of another citation or other special reason (as specified)

"O" document referring to an oral disclosure, use, exhibition or other means

"P" document published prior to the international filing date but later than the priority date claimed

"T" later document published after the international filing date or priority date and not in conflict with the application but cited to understand the principle or theory underlying the invention

"X" document of particular relevance; the claimed invention cannot be considered novel or cannot be considered to involve an inventive step when the document is taken alone

"Y" document of particular relevance; the claimed invention cannot be considered to involve an inventive step when the document is combined with one or more other such documents, such combination being obvious to a person skilled in the art

"&" document member of the same patent family

| Date of the actual completion of the international search | Date of mailing of the international search report |
|---|---|
| 31 October 2013 | 07/11/2013 |

| Name and mailing address of the ISA/ | Authorized officer |
|---|---|
| European Patent Office, P.B. 5818 Patentlaan 2<br>NL - 2280 HV Rijswijk<br>Tel. (+31-70) 340-2040,<br>Fax: (+31-70) 340-3016 | Tryfonas, N |

# INTERNATIONAL SEARCH REPORT

Information on patent family members

International application No
PCT/US2013/054178

| Patent document cited in search report | Publication date | Patent family member(s) | Publication date |
|---|---|---|---|
| DE 3737645 A1 | 24-05-1989 | NONE | |
| EP 0121510 A2 | 10-10-1984 | NONE | |
| WO 9516140 A1 | 15-06-1995 | NONE | |
| US 2011302880 A1 | 15-12-2011 | NONE | |