(19) Europäisches Patentamt
European Patent Office
Office européen des brevets

(11) EP 1 325 881 A1

(12) EUROPEAN PATENT APPLICATION
published in accordance with Art. 158(3) EPC

(43) Date of publication:
09.07.2003 Bulletin 2003/28

(21) Application number: **00964754.6**

(22) Date of filing: **10.10.2000**

(51) Int Cl.[7]: **B66B 7/06**

(86) International application number:
PCT/JP00/07027

(87) International publication number:
WO 02/030802 (18.04.2002 Gazette 2002/16)

(84) Designated Contracting States:
AT BE CH CY DE DK ES FI FR GB GR IE IT LI LU MC NL PT SE
Designated Extension States:
AL LT LV MK RO SI

(71) Applicant: **MITSUBISHI DENKI KABUSHIKI KAISHA**
Tokyo 100-8310 (JP)

(72) Inventor: **ISHII, Toshiaki,**
Mitsubishi Denki Kabushiki Kaisha
Chiyoda-ku, Tokyo 100-8310 (JP)

(74) Representative: **HOFFMANN - EITLE**
Patent- und Rechtsanwälte
Arabellastrasse 4
81925 München (DE)

(54) **ELEVATOR DEVICE**

(57) In an elevator apparatus, a car is suspended inside a hoistway by a main rope group including a main rope composed of a synthetic fiber rope, and a main rope composed of a steel rope. The number of steel ropes is set to a minimum required for a maximum load to be supported by the steel rope alone.

FIG. 1

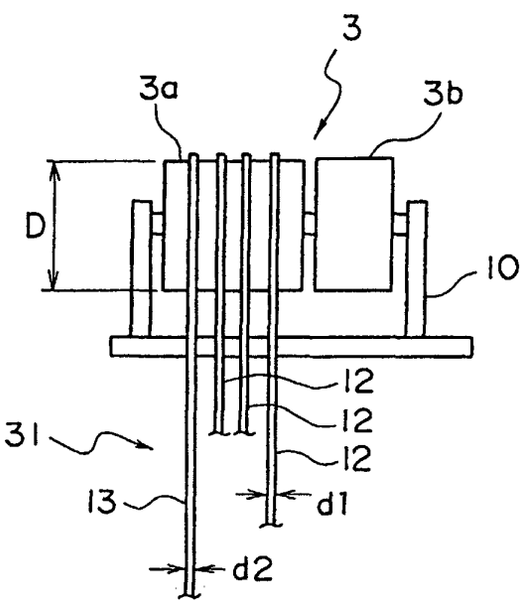

EP 1 325 881 A1

Description

TECHNICAL FIELD

[0001] The present invention relates to an elevator apparatus in which a car is suspended by a main rope group including a main rope composed of a synthetic fiber rope.

BACKGROUND ART

[0002] Conventionally, an elevator apparatus is disclosed in Japanese Patent Laid-Open No. HEI 8-261972, for example, in which the weight of a main rope is reduced by using a main rope composed of a synthetic fiber rope. In this elevator apparatus, a car is suspended by the synthetic fiber rope alone.

[0003] Furthermore, an elevator apparatus is disclosed in Japanese Utility Model Laid-Open No. SHO 63-45759, for example, in which a plurality of fire detectors are disposed inside a building and a hoistway of an elevator apparatus, operation being controlled in response to output from the fire detectors.

[0004] Figure 5 is a structural diagram showing an example of a conventional elevator apparatus. In the figure, a machine room 2 is disposed in an upper portion of a hoistway 1. A driving machine (a hoisting machine) 3 and a deflection sheave 4 are installed inside the machine room 2. The driving machine 3 includes a drive sheave 3a.

[0005] A main rope group 5 is wound around the drive sheave 3a and the deflection sheave 4. A car 6 is suspended from a first end portion of the main rope group 5. A counterweight 7 is suspended from a second end portion of the main rope group 5. The car 6 and the counterweight 7 are raised and lowered inside the hoistway 1 by the driving machine 3.

[0006] The fire detectors 8a to 8c are each installed on a landing on each of several floors. If a fire is detected by the fire detectors 8b, for example, a detection signal is sent to a control apparatus (not shown), and the car 6 is moved to a nearby floor or to a lower-story emergency escape floor 9.

[0007] Figure 6 is a side elevation showing the driving machine 3 in Figure 5. The driving machine 3 includes: the drive sheave 3a; and a motor 3b for rotating the drive sheave 3a, and is supported by a support platform 10. The main rope group 5 includes a plurality of main ropes 11 wound around the drive sheave 3a. All of the main ropes 11 are composed of a synthetic fiber rope.

[0008] However, since the main ropes 11 composed of the synthetic fiber rope have low heat tolerance compared to conventionally-used steel rope, it is desirable that the heat tolerance of the main rope group 5 be improved in order to move the car 6 to a nearby floor or the emergency escape floor 9 more reliably during a fire.

DISCLOSURE OF THE INVENTION

[0009] The present invention aims to solve the above problems and an object of the present invention is to provide an elevator apparatus enabling heat tolerance of a main rope group to be improved while taking advantage of characteristics of a synthetic fiber rope.

[0010] According to one aspect of the present invention, there is provided an elevator apparatus including: a driving machine having a drive sheave; a main rope group having a plurality of main ropes wound around the drive sheave; and a car suspended by the main rope group, the car being raised and lowered by the driving machine, wherein at least one main rope composed of a synthetic fiber rope and at least one main rope composed of a steel rope are included in the main rope group.

BRIEF DESCRIPTION OF THE DRAWINGS

[0011]

Figure 1 is a structural diagram showing part of an elevator apparatus according to Embodiment 1 of the present invention;
Figure 2 is a perspective showing a construction of a synthetic fiber rope from Figure 1;
Figure 3 is a structural diagram showing part of an elevator apparatus according to Embodiment 2 of the present invention;
Figure 4 is a structural diagram showing part of an elevator apparatus according to Embodiment 3 of the present invention;
Figure 5 is a structural diagram showing an example of a conventional elevator apparatus; and
Figure 6 is a side elevation showing a driving machine from Figure 5.

BEST MODE FOR CARRYING OUT THE INVENTION

[0012] Preferred embodiments of the present invention will now be explained with reference to the drawings.

Embodiment 1

[0013] Figure 1 is a structural diagram showing part of an elevator apparatus according to Embodiment 1 of the present invention, the overall construction of the elevator apparatus being similar to that of Figure 5.

[0014] In the figure, a driving machine 3 includes: a drive sheave 3a; and a motor 3b for rotating the drive sheave 3a, and is supported by a support platform 10. A main rope group 31 is wound around the drive sheave 3a. A car 6 and a counterweight 7 (Figure 5) are suspended inside the hoistway 1 by the main rope group 31.

[0015] Furthermore, included in the main rope group 31 are: a plurality of main ropes composed of a synthetic

fiber rope (hereinafter abbreviated to "the synthetic fiber ropes") 12; and one main rope composed of a steel rope (hereinafter abbreviated to "the steel rope") 13. A diameter d2 of the steel rope 13 is equal to or less than a diameter d1 of the synthetic fiber ropes 12 (d2 <= d1). The number of steel ropes 13 is set to a minimum required for the steel rope 13 to support a maximum load by itself, the number required in this case being one.

[0016] Figure 2 is a perspective showing a construction of a synthetic fiber rope 12 from Figure 1. In the figure, an inner strand layer 24 having a plurality of inner strands 22 and filler strands 23 disposed in gaps between these inner strands 22 is disposed around a core wire 21. Each of the inner strands 22 is composed of a plurality of aramid fibers and an impregnating material such as a polyurethane or the like. The filler strands 23 are composed of a polyamide, for example.

[0017] An outer strand layer 26 having a plurality of outer strands 25 is disposed around an outer circumference of the inner strand layer 24. Each of the outer strands 25 is composed of a plurality of aramid fibers and an impregnating material such as a polyurethane or the like in a similar manner to the inner strands 22.

[0018] A friction-reducing coating layer 27 for preventing abrasion of the strands 22 and 25 due to friction among the strands 22 and 25 in sheaves such as the drive sheave 3a, etc., is disposed between the inner strand layer 24 and the outer strand layer 26. A protective coating layer 28 is also disposed on an outer circumferential portion of the outer strand layer 26. The synthetic fiber rope has a high coefficient of friction compared to the steel rope and is superior in flexibility.

[0019] In the above elevator apparatus, since a plurality of synthetic fiber ropes 12 (in this case three) and one steel rope 13 are included in the main rope group 31, even if the synthetic fiber ropes 12 melt through during a fire or the synthetic fiber ropes 12 are damaged by frictional heat, etc., the steel rope 13 will remain without melting through or being damaged.

[0020] Since strength of the main ropes 12 and 13 in the elevator apparatus is normally required to have a safety factor of an order of 10, the steel rope 13 alone can continue suspending the car 6 and the counterweight 7, enabling the car 6 to be moved to a nearby floor or to an emergency escape floor 9. Consequently, heat tolerance of the main rope group 31 can be improved while taking advantage of the characteristics of the synthetic fiber ropes 12.

[0021] Furthermore, with a conventional steel rope, a ratio D/d between a diameter D of the drive sheave 3a and a rope diameter d is required to be equal to or greater than 40. However, in the case of the synthetic fiber ropes 12, it is possible to reduce D/d due to the characteristics thereof. Consequently, the diameter D of the drive sheave 3a can be reduced more than is conventionally possible. Accompanying this, the diameter d2 of the steel rope 13 is equal to or less than the diameter d1 of the synthetic fiber ropes 12.

[0022] Moreover, the number of steel ropes 13 can also be two or more, but the characteristics of synthetic resin rope 12 can be utilized more fully by keeping to the minimum required for the steel rope 13 to support the maximum load by itself.

Embodiment 2

[0023] Figure 3 is a structural diagram showing part of an elevator apparatus according to Embodiment 2 of the present invention. In the figure, a main rope group 32 is wound around the drive sheave 3a. A plurality of synthetic fiber ropes 12 (in this case four) and one steel rope 13 are included in the main rope group 32. The number of synthetic fiber ropes 12 is set such that the strength required of the main rope group 32 from a design perspective is achieved by the synthetic fiber ropes 12 alone.

[0024] In other words, the construction is such that the steel rope 13 is added superfluously to the overall strength of the main rope group 32, and loads do not have to be borne by the steel rope 13 during normal operation. The steel rope 13 has, of course, a strength equal to or greater than the minimum required for the steel rope 13 to support the maximum load by itself. The rest of the construction is similar to that of Embodiment 1.

[0025] Using a construction of this kind, the load acting on the steel rope 13 can be reduced during normal operation and the characteristics of synthetic fiber rope 12 can be fully utilized.

Embodiment 3

[0026] Figure 4 is a structural diagram showing part of an elevator apparatus according to Embodiment 3 of the present invention. In the figure, a barrier 33 functioning as an oil shielding means for preventing oil contained in the steel rope 13 from splashing and adhering to the synthetic fiber ropes 12 is fixed to the drive sheave 3a. The barrier 33 is disposed on the drive sheave 3a between a groove for the steel rope 13 and grooves for the synthetic fiber ropes 12.

[0027] Furthermore, a rope cover 34 functioning as an oil shielding means for preventing oil contained in the steel rope 13 from splashing and adhering to the synthetic fiber ropes 12 while allowing rotation of the drive sheave 3a and movement of the steel rope 13 is disposed around the drive sheave 3a. The rest of the construction is similar to that of Embodiment 2.

[0028] Now, since the steel rope 13 includes a hemp core containing an oil and the steel rope 13 bears a compressive load and is subjected to centrifugal force due to rotation, particularly when passing through the drive sheave 3a, the oil inside the steel rope 13 may splash onto a surrounding area. Hence, if the oil splashes and adheres to the synthetic fiber ropes 12, problems arise such as the traction capacity being reduced, etc.

[0029] In answer to this, since the barrier 33 and the rope cover 34 are provided in Embodiment 3, the oil can be prevented from adhering to the synthetic fiber ropes 12 more reliably.

[0030] Moreover, in Embodiment 3, two kinds of oil shielding means, namely the barrier 33 and the rope cover 34, are used, but either one may also be used alone provided that the oil can be prevented from adhering to the synthetic fiber ropes 12.

[0031] Furthermore, in Embodiments 1 to 3, an elevator apparatus using a 1:1 roping method is shown, but the present invention can be applied to any type of elevator apparatus provided that it is an elevator apparatus in which a car is suspended by means of a main rope group including a synthetic fiber rope.

Claims

1. An elevator apparatus comprising:

a driving machine having a drive sheave;
a main rope group having a plurality of main ropes wound around said drive sheave; and
a car suspended by said main rope group, said car being raised and lowered by said driving machine,

wherein at least one main rope composed of a synthetic fiber rope and at least one main rope composed of a steel rope are included in said main rope group.

2. The elevator apparatus according to claim 1, wherein the number of said steel ropes is set to a minimum required for a maximum load to be supported by said steel ropes alone.

3. The elevator apparatus according to claim 1, wherein a diameter of said steel rope is equal to or less than a diameter of said synthetic fiber rope.

4. The elevator apparatus according to claim 1, wherein the number of said synthetic fiber ropes is set such that strength required of said main rope group from a design perspective is achieved by said synthetic fiber ropes alone.

5. The elevator apparatus according to claim 1, wherein an oil shielding means for preventing oil contained in said steel rope from adhering to said synthetic fiber rope is disposed around said drive sheave.

FIG. 1

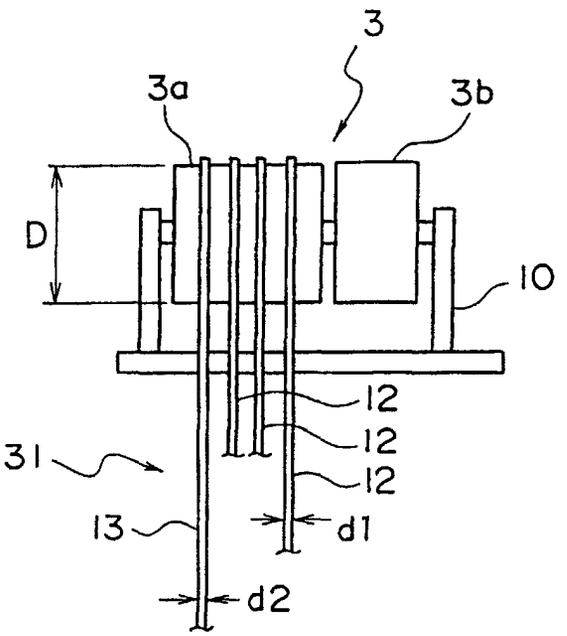

FIG. 2

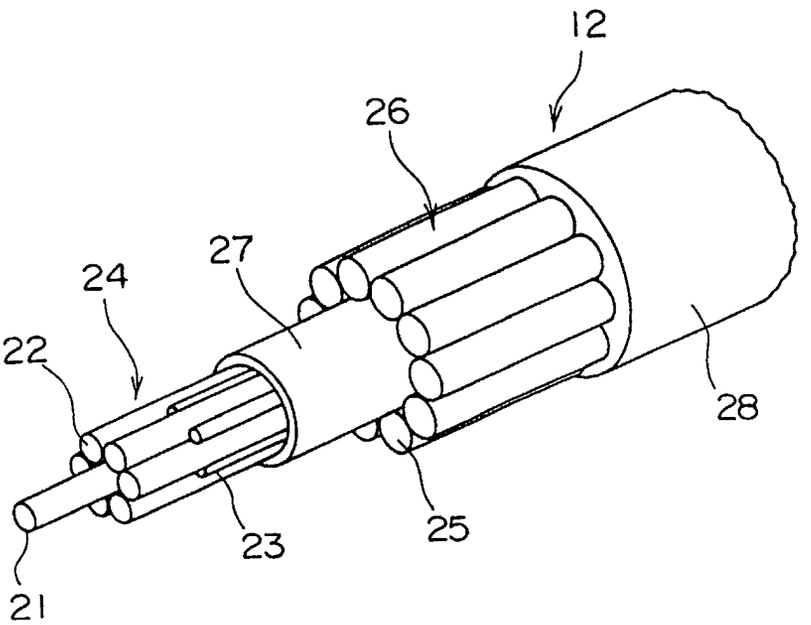

FIG. 3

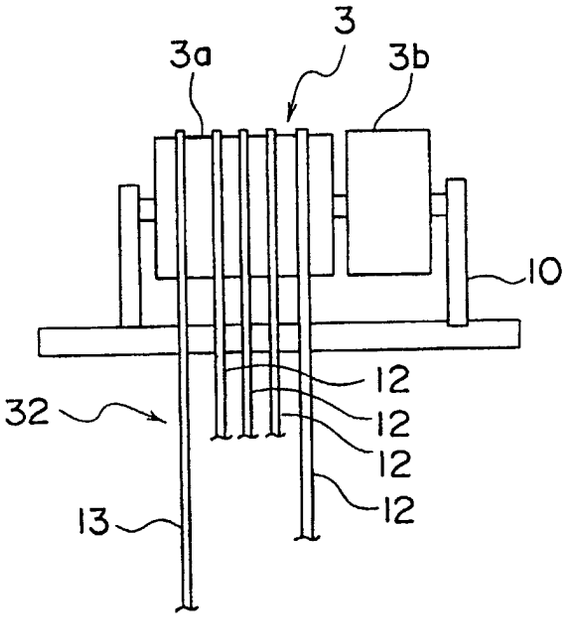

FIG. 4

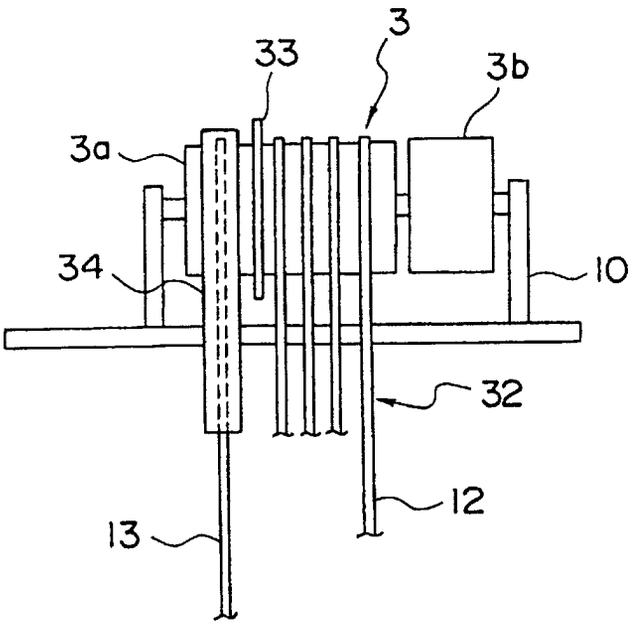

FIG. 5

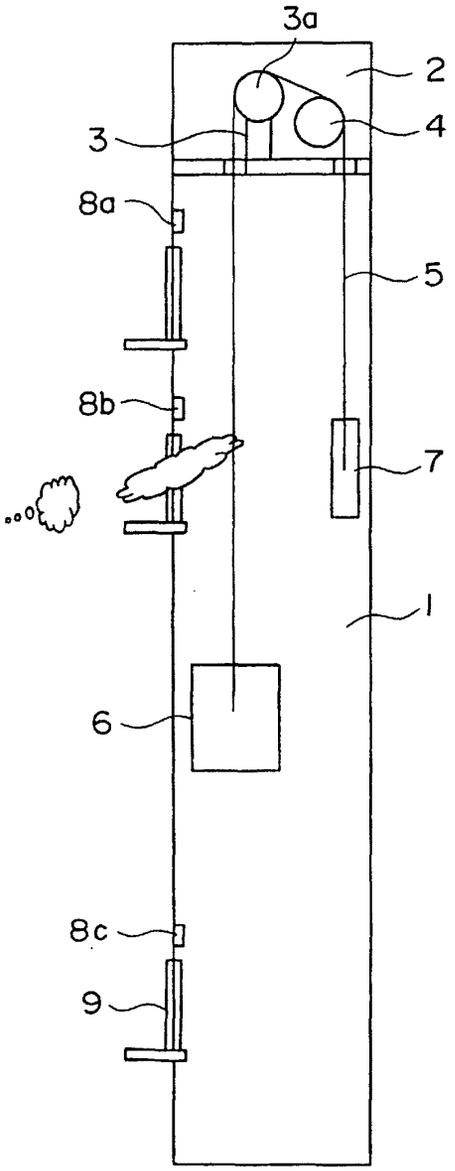

図 6

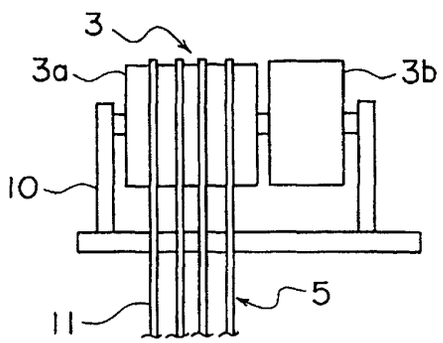

INTERNATIONAL SEARCH REPORT

International application No.
PCT/JP00/07027

A. CLASSIFICATION OF SUBJECT MATTER
Int.Cl[7] B66B 7/06

According to International Patent Classification (IPC) or to both national classification and IPC

B. FIELDS SEARCHED

Minimum documentation searched (classification system followed by classification symbols)
Int.Cl[7] B66B 7/06, D07B 1/00-D07B 1/22

Documentation searched other than minimum documentation to the extent that such documents are included in the fields searched
Jitsuyo Shinan Koho 1922-1996 Jitsuyo Shinan Toroku Koho 1996-2001
Kokai Jitsuyo Shinan Koho 1971-2001 Toroku Jitsuyo Shinan Koho 1994-2001

Electronic data base consulted during the international search (name of data base and, where practicable, search terms used)

C. DOCUMENTS CONSIDERED TO BE RELEVANT

Category*	Citation of document, with indication, where appropriate, of the relevant passages	Relevant to claim No.
A	JP, 2-231385, A (Mitsubishi Electric Corporation), 13 September, 1990 (13.09.90) (Family: none)	1-3
A	Microfilm of the specification and drawings annexed to the request of Japanese Utility Model Application No. 12143/1983 (Laid-open No. 117699/1984), (Toshiba Corporation), 08 August, 1984 (08.08.84), (Family: none)	1
A	JP, 2000-220084, A (Inventio AG), 08 August, 2000 (08.08.00), & CN, 1270252, A & EP, 1022376, A1	1,4
A	US, 5651245, A (Trefileurope France), 29 July, 1997 (29.07.97), & CA, 2127563, A & EP, 0633350, A1 & FI, 943266, A & FR, 2707309, A & SG, 50709, A	1,5
A	JP, 61-155184, A (Toshiba Corporation), 14 July, 1986 (14.07.86) (Family: none)	1,5

☐ Further documents are listed in the continuation of Box C. ☐ See patent family annex.

* Special categories of cited documents:
"A" document defining the general state of the art which is not considered to be of particular relevance
"E" earlier document but published on or after the international filing date
"L" document which may throw doubts on priority claim(s) or which is cited to establish the publication date of another citation or other special reason (as specified)
"O" document referring to an oral disclosure, use, exhibition or other means
"P" document published prior to the international filing date but later than the priority date claimed
"T" later document published after the international filing date or priority date and not in conflict with the application but cited to understand the principle or theory underlying the invention
"X" document of particular relevance; the claimed invention cannot be considered novel or cannot be considered to involve an inventive step when the document is taken alone
"Y" document of particular relevance; the claimed invention cannot be considered to involve an inventive step when the document is combined with one or more other such documents, such combination being obvious to a person skilled in the art
"&" document member of the same patent family

Date of the actual completion of the international search	Date of mailing of the international search report
19 June, 2001 (19.06.01)	03 July, 2001 (03.07.01)
Name and mailing address of the ISA/ Japanese Patent Office	Authorized officer
Facsimile No.	Telephone No.

Form PCT/ISA/210 (second sheet) (July 1992)