Aug. 31, 1943. C. C. COONS 2,328,195

REFRIGERATION

Filed April 2, 1941 5 Sheets-Sheet 1

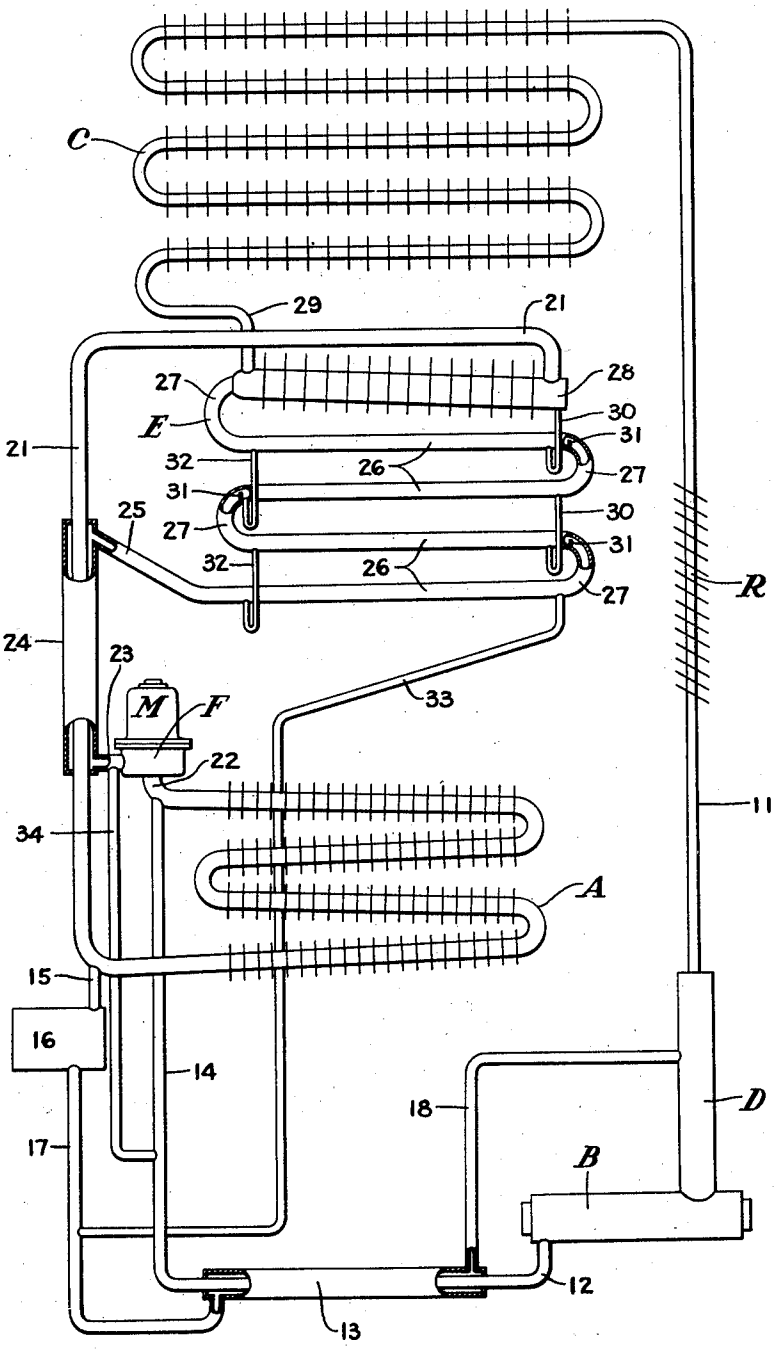

Fig. 1

INVENTOR
Curtis C. Coons
BY
Harry S. Duncan
ATTORNEY

Aug. 31, 1943. C. C. COONS 2,328,195

REFRIGERATION

Filed April 2, 1941 5 Sheets-Sheet 2

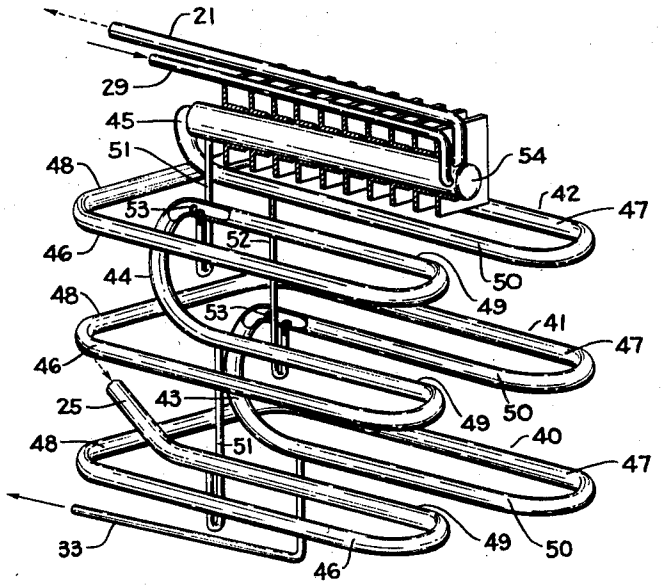

Fig. 2

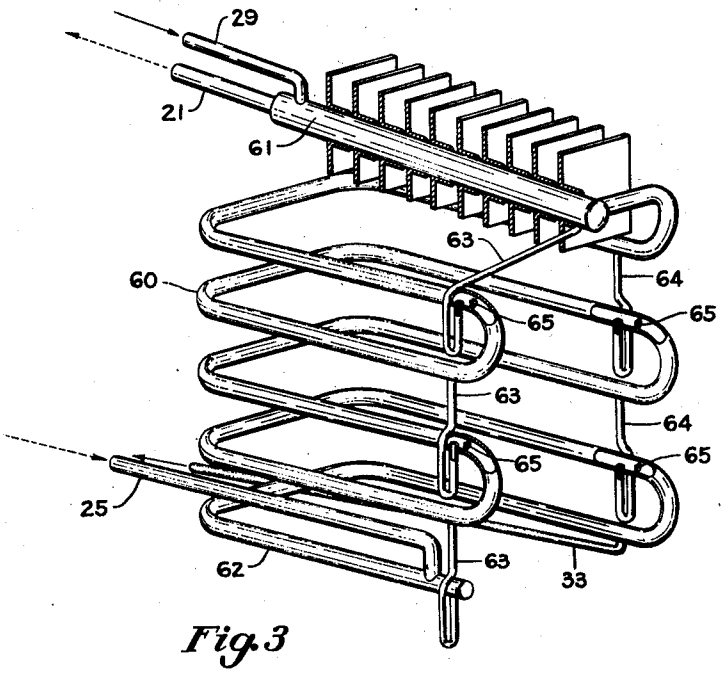

Fig. 3

INVENTOR
Curtis C. Coons
BY
Harry S. Demarre
ATTORNEY

Aug. 31, 1943. C. C. COONS 2,328,195

REFRIGERATION

Filed April 2, 1941 5 Sheets-Sheet 3

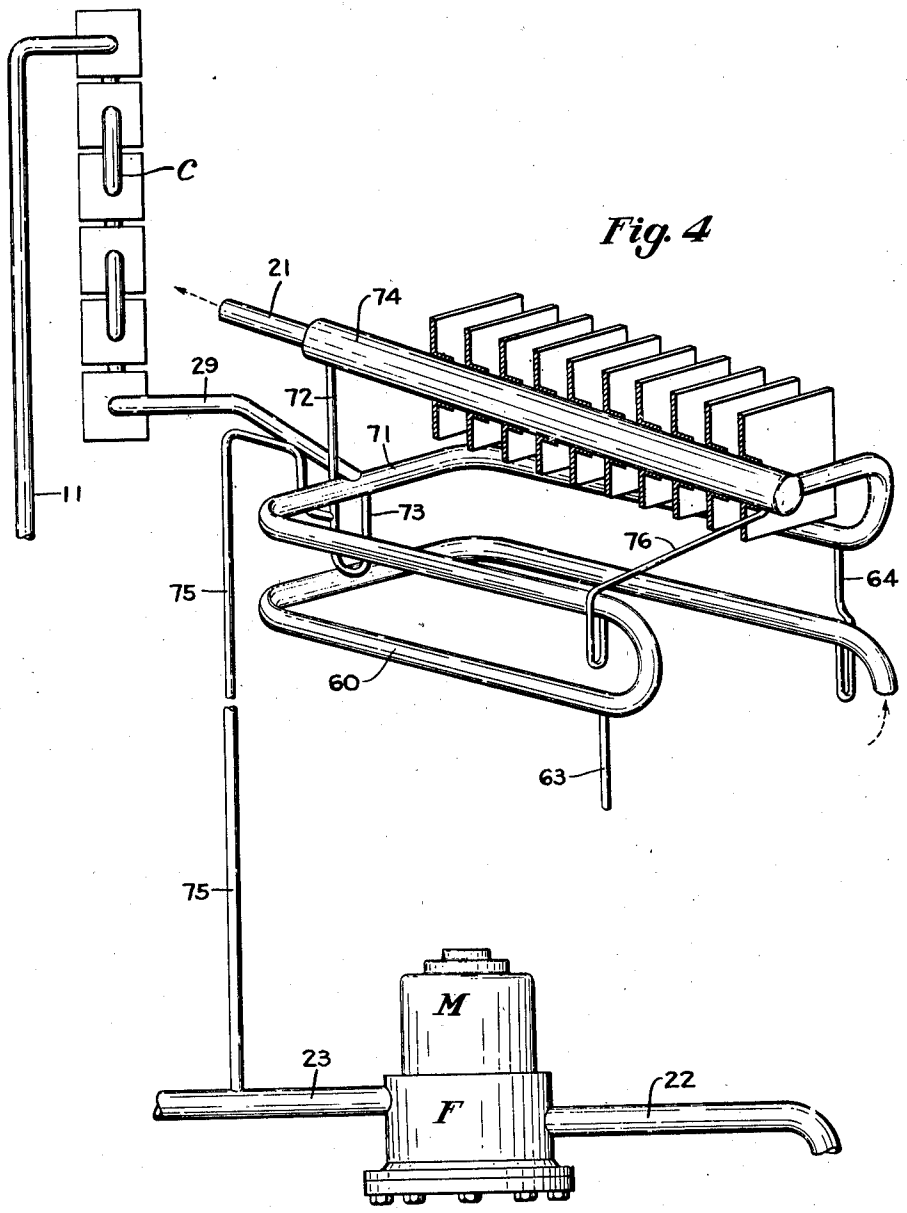

Fig. 4

INVENTOR
Curtis C. Coons
BY
Harry S. Demarse
ATTORNEY

Aug. 31, 1943. C. C. COONS 2,328,195

REFRIGERATION

Filed April 2, 1941 5 Sheets-Sheet 4

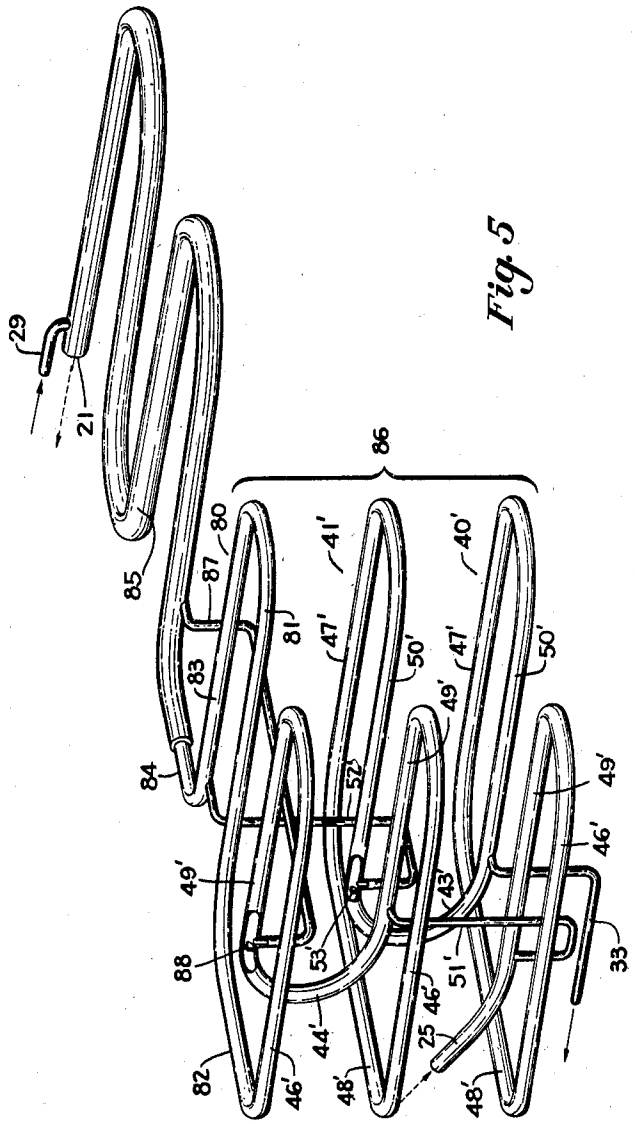

Fig. 5

INVENTOR
Curtis C. Coons
BY
Harry S. Dumaresq
ATTORNEY

Aug. 31, 1943. C. C. COONS 2,328,195

REFRIGERATION

Filed April 2, 1941 5 Sheets-Sheet 5

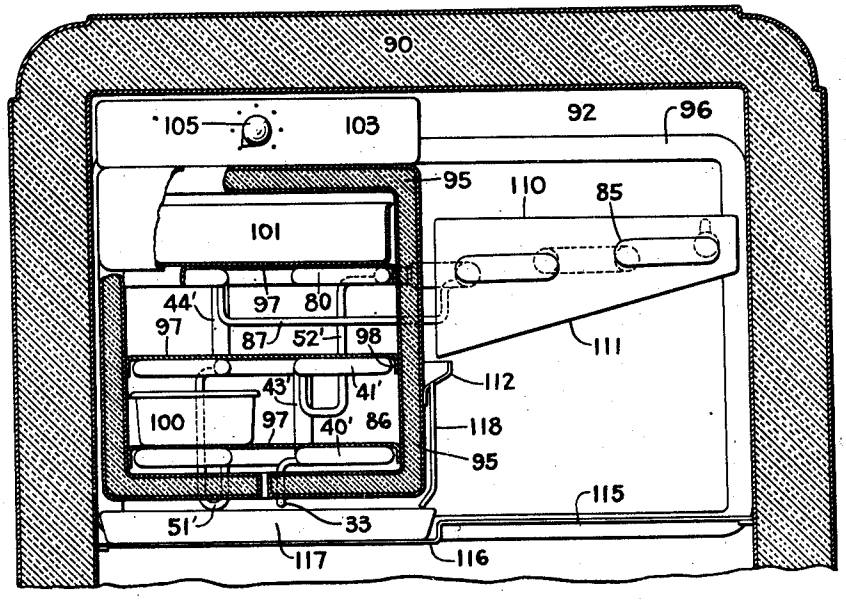

Fig. 6

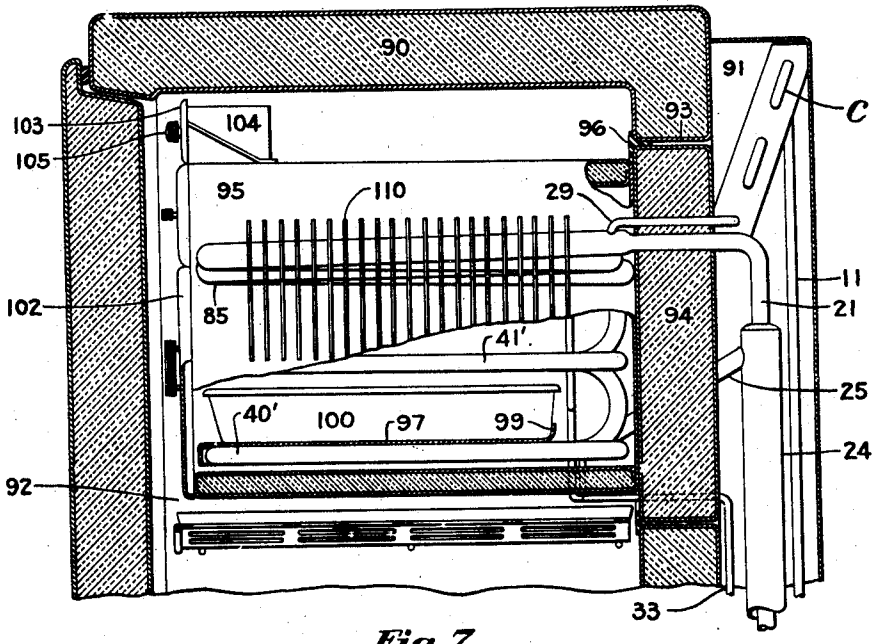

Fig. 7

INVENTOR
Curtis C. Coons
BY
Harry S. Duncan
ATTORNEY

Patented Aug. 31, 1943

2,328,195

UNITED STATES PATENT OFFICE

2,328,195

REFRIGERATION

Curtis C. Coons, North Canton, Ohio, assignor to The Hoover Company, North Canton, Ohio

Application April 2, 1941, Serial No. 386,394
In Great Britain August 20, 1937

35 Claims. (Cl. 62—119.5)

This invention relates to absorption refrigerating systems and more particularly to evaporator structures designed for use in such systems.

This application is a continuation-in-part of my application Serial No. 220,186, filed July 20, 1938.

Heretofore, evaporators designed for use in absorption refrigerating systems and particularly those designed for use in three fluid absorption refrigerating systems were of the gravity type; that is, the liquid refrigerant was supplied to the top portion of the evaporator and flowed continually downwardly therethrough by gravity and in contact with a pressure equalizing medium. These evaporators had the disadvantage that the sole propelling force operable to move the liquid was the force of gravity, and they did not relate the rates of gas and liquid flow through the evaporator. In the continuous passage type evaporator, a type almost universally used in domestic installations, the evaporator was liable to be blocked with liquid refrigerant if the refrigerating cabinet was set up in a slightly inclined position due to inaccuracies in manufacture or to imperfections in the supporting surface. This caused either complete blockage of the evaporator or the undesirable accumulation of quantities of liquid refrigerant in low portions of the evaporator coil which seriously interfered with the free flow of inert gas through the evaporator even if they did not completely block such flow.

I have discovered that a propelled stream of pressure equalizing medium, preferably a dense inert gas such as nitrogen, can be utilized to sweep or drag the liquid refrigerant through the horizontal or substantially horizontal portions of the evaporator whereby the flow of liquid refrigerant through the evaporator is proportional to the rate of flow of the pressure equalizing medium and blockage of the gas path is effectively prevented.

More specifically, I have devised an evaporator in which the general direction of flow of the liquid refrigerant therethrough is downwardly and the general direction of flow of the inert gas therethrough is upwardly but in which the gas and liquid flow in parallel relationship at all points of gas and liquid contact.

I have also provided an evaporator structure wherein the liquid refrigerant is supplied to an intermediate elevation thereof and is wholly or partly elevated into the top thereof by means of a gas lift pump. This is a very advantageous construction for the reason that space limitations in domestic refrigerating cabinets are sharply limited and it is highly desirable to place the evaporater in the very top portion of the food storage compartment. If the liquid refrigerant discharged by the condenser can be supplied to the evaporator below the top thereof, the condenser can be extended or lowered with respect to the refrigeration cabinet and the evaporator can be raised to the top portion of the food storage compartment.

The design and arrangement of previous three-fluid absorption refrigerating machines is involved by the necessity for continuously sloping the evaporator conduit or passageway from one end to the other thereof in order to provide for flow of the liquid refrigerant by gravity. This is further complicated by the fact that it is impossible to insure absolute leveling of the apparatus either in manufacture or in installation. The slope of the evaporator conduits must be such as to insure a proper flow of liquid even though the evaporator be set in an inclined position both in the manufacture of the machine and in the installation thereof in a household. Due to the necessity for sloping the conduits previous machines could not be designed so as to place the ice freezing trays in direct heat transfer relationship with the conduit or gas and liquid passageway forming means of the evaporator. The prior practice is to form the evaporator of a heavy casting with continuously sloped passageways in the sides and back thereof in order to insure flow of the liquid refrigerant by gravity. The heat which is to be abstracted from the ice trays must then be conducted from the shelf upon which the tray rests to the side walls of the evaporator casing and then to the evaporator passageway. This seriously impairs the efficiency of present three-fluid absorption machines and also causes them to be unusually slow ice freezers.

In prior constructions the amount of coil which can be arranged in a restricted vertical plane is limited as it is not feasible to extend the vertical dimension of the evaporator because this would render a large part of the storage chamber useless. Another limiting factor in prior constructions arises from the fact that heat must be conducted from the bottom of the freezing tray laterally through the tray supporting shelf to the side walls of the evaporator. This precludes an evaporator construction in which more than one ice tray is positioned at any given vertical elevation; that is, ice trays cannot be positioned side by side.

By placing the passageways in the side and back walls of the evaporator casing the heat transfer path between the air in the storage compartment and the evaporating liquid refrigerant is much better than the heat transfer passageway path between the ice freezing trays and the evaporating liquid refrigerant. Those portions of the evaporator passageways connecting vertically spaced parts of prior evaporators produce refrigeration which is substantially useless for ice production because of the long heat transfer path between the ice trays and the connecting parts of the passageway. Therefore, in previous machines a great quantity of frost is collected on the very cold side walls of the evaporator and foodstuffs in the storage compartment are unduly dried out.

Previous three-fluid refrigerating machines are normally provided with an upper conduit which carries a number of fins for the purpose of cooling the air within the storage compartment. However, this element is normally effective only under very severe conditions as the demands of ice freezing must always be met and by far the greater part of the air cooling load is carried by the walls of the freezing chamber and the finned conduit serves only as a peak load cooling unit.

It is accordingly a principal object of this invention to provide an evaporator construction useful in a three-fluid absorption refrigerating machine in which the ice trays may rest directly upon the evaporator conduits and in which inaccuracies in manufacture and inclination of the machine encountered in installation of the same will in no wise affect the operativeness of the apparatus or the flow of liquid refrigerant therethrough.

It is a further object of the present invention to provide an evaporator for three-fluid absorption refrigerating machines in which the evaporator directly underlies the ice trays and is thermally remote from the side walls of the refrigerating chamber.

It is another object of the invention to provide an evaporator for three-fluid absorption refrigerating systems in which substantially all the refrigerating effect at low temperatures occurs in the horizontal evaporator passageways underlying the freezing receptacles and in which substantially no refrigerant is produced in the passageways connecting vertically spaced parts of the evaporator.

It is a further object of the present invention to provide a three-fluid absorption refrigerating machine in which the evaporator is so constructed and arranged that the ice freezing portions thereof are in the most direct and intimate possible heat transfer relationship with the ice freezing trays, are thermally remote from the air circulating in the storage chamber and in which the air cooling load is carried directly by an air cooling element.

It is another object of the invention to provide an evaporator for three-fluid absorption refrigerating machines in which the actual evaporator conduits are concealed and are so positioned that the evaporator may be styled as desired.

It is a further object of the present invention to provide an evaporator construction in which the liquid refrigerant flows first through an air cooling element, then through a cooling element which serves directly to refrigerate a removable storage drawer for meat and the like and indirectly to refrigerate ice trays and then flows through a path in direct heat transfer relationship with ice trays in counterflow relationship with the inert gas stream.

It is another object of the invention to provide an evaporator for three-fluid absorption refrigerating systems in which the length of the evaporating passageway may be as great as desired, the evaporating passageway may be arranged in direct heat conducting relationship with the ice trays, there is no need to make the vertical dimensions of the evaporator excessive, and a plurality of ice trays may be positioned side by side at the same elevation without impairing the efficiency of the apparatus or increasing the time required to freeze ice.

It is a further object of the invention to provide an absorption refrigerating machine so constructed and arranged that the ice freezing portions thereof may be arranged in direct heat conducting relationship with the ice trays and in which the air cooling portions thereof are arranged effectively to refrigerate the air within the storage compartment without substantial blockage of air flow thereover by the ice freezing portions of the evaporator.

Other and more specific objects of my invention will become apparent as the description proceeds when taken in connection with the accompanying drawings in which:

Figure 1 is a diagrammatic representation of the refrigerating system embodying my invention;

Figure 2 is a detailed perspective view showing one form of my evaporator;

Figure 3 is another detailed perspective view showing a second form of my evaporator; and

Figure 4 is another detailed perspective view showing a third form of my evaporator.

Figure 5 is a perspective view of another form of the evaporator.

Figure 6 is a partial front elevational view in section showing the form of the evaporator illustrated in Figure 5 installed in a cabinet, and

Figure 7 is a side elevational view of the apparatus shown in Figure 6.

Referring now to the drawings in detail and first to Figure 1 thereof, it will be seen that I have illustrated a continuous three fluid absorption refrigerating system comprising a boiler B, an analyzer D, a rectifier R, a condenser C, an evaporator E, an absorber A, and a circulating fan F operated by an electric motor M. The elements just enumerated are suitably connected to form a complete refrigerating system including a number of local gas and liquid circuits. It will be understood that the system is suitably charged with a refrigerant such as ammonia, an absorbent such as water, and a pressure equalizing medium, preferably a dense inert gas such as nitrogen.

The boiler B is heated by any suitable means such as a gas burner or an electric cartridge heater. The circulating fan motor M and the heater for the boiler B are controlled in any suitable or desired manner. Preferably these elements are periodically energized to produce refrigeration under the control of any suitable control mechanism. A suitable control mechanism is disclosed in Patent No. 2,228,343 issued to Curtis C. Coons on January 14, 1941.

The strong solution of refrigerant in an absorbent contained in the boiler B liberates refrigerant vapor when heated. The refrigerant vapor passes upwardly through the analyzer D in counterflow relationship to strong solution returning to the boiler B from a source to be described hereinafter. Any vapors of absorption solution

which may be carried into the analyzer D are condensed therein and the heat of condensation serves to liberate more refrigerant vapor from the strong solution flowing downwardly in the analyzer D whereby substantially pure refrigerant vapor is discharged from the analyzer D into the top portion of the condenser C through a conduit 11. The conduit 11 includes a rectifier R, preferably of the air cooled type, which functions to cause condensation of any absorbent vapor which may pass through the analyzer D. The condenser C is preferably a tubular finned air cooled type and serves to liquefy the refrigerant vapor by heat exchange with the ambient air.

The generation of refrigerant vapor in the boiler B weakens the solution therein which weak solution is withdrawn through a conduit 12, liquid heat exchanger 13, and conduit 14 into the top portion of the absorber A which is preferably of the finned tubular air cooled type. The weak solution flows downwardly through the absorber A by gravity in counterflow to a refrigerant vapor inert gas mixture flowing upwardly therethrough and supplied from a source to be described hereinafter. Strong solution formed in the absorber A is discharged therefrom through a conduit 15 into a solution reservoir 16. The strong solution is conveyed from the reservoir 16 through a conduit 17, liquid heat exchanger 13, and a conduit 18 into the upper portion of the analyzer D.

The absorber A and the evaporator E are connected to form a pressure equalizing medium circuit. A rich gas conduit 21 connects the top portion of the evaporator with the bottom portion of the absorber. The lean gas formed in the absorber A exits from the top portion thereof through a conduit 22 into the suction inlet of the circulating fan F. The lean gas is placed under pressure by the fan F and is discharged therefrom through a conduit 23, gas heat exchanger 24, and a conduit 25 into the bottom of the evaporator E. The conduit 21 also passes through the gas heat exchanger 24.

It will be noted that the junction of the conduits 14 and 22 is appreciably higher than the boiler analyzing system whereby the liquid must be elevated or pumped through the conduit 14. For this purpose a bleed-off conduit 34 is connected between the discharge conduit 23 of the fan and the conduit 14 below the liquid level in the boiler analyzing system whereby the weak solution in the conduit 14 is elevated into the top portion of the absorber A by gas lift action.

It will be seen from the description above that the inert gas travels continuously through the evaporator E from the bottom to the top thereof.

The evaporator E is diagrammatically illustrated as comprising a series of horizontal conduit sections 26 connected by riser conduits 27. The top riser conduit 27 opens into an enlarged finned box-cooling conduit 28 to the forward end of which is connected the rich gas conduit 21. Liquid refrigerant is conveyed from the condenser C to the rear end of the conduit 28 by means of a conduit 29. The liquid flows through the conduit 28 by gravity in the direction of flow of the inert gas stream to the forward end thereof from which point it is drained by a conduit 30 including a liquid trap into the forward end of the top conduit 26. A small dam 31 is formed in the top conduit 26 to prevent liquid refrigerant from flowing downwardly into the adjacent riser conduit 27. The liquid supplied to the top conduit 26 flows rearwardly thereof under the impetus of the propelled stream of inert gas supplied from the fan F until it reaches the top riser conduit 27 from which point it is drained through a conduit 32 including a liquid trap into the rear end of the next lower conduit 26. A dam 31 is also provided at this point. It will be seen that the inert gas stream is now travelling toward the front of the evaporator and that the liquid refrigerant is carried along thereby to the front portion of the evaporator from which point it is again drained to the next lower conduit. This process is continued until the liquid refrigerant is finally drained into the lowest conduit 26 adjacent its point of connection with the gas supply conduit 25. Any liquid refrigerant or foreign matter not evaporated in the various portions of the evaporator is drained therefrom through a conduit 33 to the strong solution return line 17.

The gas conduits 27 and the liquid conduits 30 and 32 while part of the evaporator structure in a broad sense, are not evaporator or refrigerator producing conduits because refrigerant does not evaporate therein. Therefore, the refrigerating effect is produced only in the horizontal conduits 26 and in the inclined conduit 28.

While all elements of my system have been illustrated diagrammatically, it is to be understood that they may be constructed in any desired specific form.

From the description above it will be seen that the liquid refrigerant flows continuously downwardly through the evaporator and that the inert gas flows continuously upwardly therethrough but that the gas and liquid travel in parallel identical paths wherever they are in contact and that the liquid is propelled or carried along by the inert gas stream except at such times as it is falling through a substantially vertical gas sealed drain conduit.

Referring now to Figure 2 wherein is illustrated a specific form of my evaporator, it will be seen that I have given the gas inlet and outlet conduits, the liquid refrigerant supply conduit, and the drain conduit the same reference characters as those applied to corresponding elements in Figure 1. It is to be understood that the evaporator of Figure 2 is designed to be used in a system such as that illustrated in Figure 1.

The evaporator comprises a vertically spaced parallel series of horizontal coil sections 40, 41 and 42 which are serially connected by riser conduits 43 and 44. The top coil section 42 is connected to the rear end of a finned box-cooling conduit 54 by means of a riser conduit 45. Each coil section comprises four spaced parallel conduits. The outer conduits 46 and 47 of each coil section are serially connected by transverse conduits 48 extending across the rear of the evaporator. The inner conduits 49 and 50 of each coil section are serially connected across the front of the evaporator to the adjacent outer conduits 46 and 47, respectively, whereby the inner conduits form the inlet and outlet connections of each coil section. The gas supply conduit 25 is connected to the inner conduit 49 of the lowest coil section, and the other inner conduit 50 of the lowest coil section communicates through the riser conduit 43 with the superposed inner conduit of the central coil section 41. The other inner conduit of the central coil section 41 communicates with the superposed inner conduit of the top coil section 42 through the riser conduit 44. The other inner conduit of the top coil section 42 communicates with the box-cooling conduit through the riser conduit 45. In this embodiment of the invention the box-cooling coil is sloped slightly downward-

ly to the rear and the liquid refrigerant inlet conduit 29 and the gas outlet conduit 21 each connect to the forward end of the box-cooling coil whereby the liquid refrigerant flows through the box-cooling coil by gravity in counterflow relationship with the inert gas stream.

The rear end of the box-cooling conduit 54 is drained into the inlet conduit 49 of the top coil section 42 through a conduit 51 having a U-shaped liquid seal portion. The liquid refrigerant is carried through the coil section 42 with the inert gas stream to a drain conduit 52 adjacent the riser conduit 45. The drain conduit 52 including a U-shaped liquid seal portion connects the outlet of the coil section 42 into the inlet of the central coil section 41. In like manner the center coil section 41 is drained into the bottom coil section 40 adjacent the gas inlet connection thereto. A small dam 53 is provided adjacent the outlet of each drain conduit whereby to prevent liquid refrigerant from flowing downwardly through the adjacent riser conduit. The drain conduit 33 is connected to the bottom coil 40 adjacent its connection with the riser conduit 43.

In this evaporator the liquid refrigerant flows in counterflow relationship with the inert gas in the box-cooling conduit and is then drained to the inlet of the subjacent coil section through which it travels in parallel flow relationship with the inert gas and under the impetus thereof. The liquid refrigerant is then drained from the outlet of one coil to the inlet of the subjacent coil entirely through the evaporator coil structure. While only three coil sections have been illustrated, it will be understood that more or less may be provided as desired.

The vaporator illustrated in Figure 2 is well adapted to be enclosed in a sheet metal casing whereby the coil sections 40 and 41 form shelves which are adapted to receive ice-freezing trays.

Referring now to Figure 3 there is shown another form of my evaporator. The gas inlet and outlet conduits, the liquid refrigerant conduits, and the drain conduit are given the same reference characters as corresponding parts in the refrigerating system illustrated in Figure 1, and it is to be understood that this evaporator is adapted to be used in a refrigerating system such as that disclosed in Figure 1.

This form of my evaporator comprises a continuous coil 60 serially connected to the front end of an enlarged box-cooling conduit 61. The coil 60 comprises a series of vertically spaced horizontal parallel U-shaped coil sections. One leg of each coil section is connected by means of a riser conduit to the superposed coil section and the other leg is connected by means of a riser conduit to the subjacent coil section. The gas inlet 25 communicates with the front end of one leg of the lowest coil section 62 and the drain conduit 33 communicates with the forward or discharge end of the other leg of the lowest coil section 62. The gas outlet conduit 21 and the refrigerant liquid inlet conduit 29 are connected to the rear end of the box-cooling conduit 61 whereby the liquid refrigerant flows through this conduit in counterflow relationship with the inert gas stream. The liquid refrigerant is drained from the front end of the conduit 61 into the gas inlet leg of the subjacent U-shaped coil section by means of a drain conduit 63 which includes a U-shaped liquid sealing trap. The gas outlet leg of the top U-shaped coil section is trapped into the gas inlet leg of the subjacent U-shaped coil section by means of a drain conduit 64 which also includes a U-shaped liquid sealing trap. The gas inlet leg of each U-shaped coil section is provided with a small dam 65 adjacent the riser conduit which connects it to the subjacent coil section whereby to prevent liquid refrigerant from flowing downwardly into the subjacent coil section. This process is continued until the liquid is drained into the inlet leg of the bottom U-shaped coil section adjacent the inert gas inlet.

It will be seen from the description above that the liquid refrigerant travels through the box-cooling coil by gravity in counterflow relationship with the inert gas stream and that it thereafter travels in parallel relationship with and under the influence of the inert gas stream at all points at which the gas and liquid are in contact. The liquid is progressively drained from level to level through the evaporator coil out of contact with the gas stream.

The evaporator just described is well adapted to receive ice-freezing trays therein or to be formed as a part of a metal evaporator structure including tray supporting shelves.

Referring now to Figure 4, it will be seen that I have illustrated still another form of my evaporator. The evaporator in Figure 4 is adapted to be utilized in structures wherein it is desirable to place the evaporator at the highest permissible level in the food storage compartment. This evaporator is designed to be utilized in a refrigeration system such as that disclosed in Figure 1. And to this end the gas outlet and liquid inlet conduits, the circulating fan and motor, the fan supply and discharge conduits, and the condenser are given the same reference characters as corresponding parts in Figure 1.

The evaporator disclosed in Figure 4 is identical with that disclosed in Figure 3 except in the following respects. The liquid inlet conduit 29 is connected to the center of the bight portion 71 of the top U-shaped coil section. A gas lift pump conduit 72 including a bottom U-shaped portion 73 is connected between the conduit 71 and the rear end of the box-cooling conduit 74. A gas bleed-off conduit 75 is connected between the gas discharge conduit 23 of the fan F and the U-shaped portion 73 of the conduit 72 below the level of the conduit 71 whereby liquid refrigerant flowing into the U-shaped portion 73 is elevated into the rear end of the box-cooling conduit 74 by gas lift action. Liquid refrigeration not evaporated in the conduit 74 is drained therefrom through a conduit 76 corresponding to the conduit 63 described in connection with Figure 3. The liquid refrigerant is progressively drained from level to level through the evaporator in the identical manner described in connection with Figure 3.

All or only a part of the liquid refrigerant may be elevated into the box-cooling conduit 74. Though only a single gas lift pump has been shown it is to be understood that the liquid refrigerant may be supplied to any level of the evaporator and elevated to the top thereof by one or more gas lift pumps.

The evaporator just described permits the box-cooling coil to be positioned above the bottom of the condenser whereby the evaporator as a whole may be positioned at a high elevation in the food storage compartment.

In Figure 5 there is illustrated another modified form of the invention, particularly designed for use in a refrigerator cabinet in which it is

desirable to isolate the ice freezing and air cooling portions of the evaporator from each other.

This evaporator is substantially identical with the evaporator disclosed and described in connection with Figure 2 except in the respects noted specifically below. The same reference characters primed have been used to denote those portions of the evaporator which are identical with the evaporator of Figure 2. In this connection the two lowermost coil sections 40' and 41' and their respective connections to the inert gas circuit drain and interconnections between themselves are identical with the coil sections 40 and 41 of Figure 2. The uppermost coil sections 80 of Figure 5 contain the elements 46' and 49' which are identical with the elements 46 and 49 of the uppermost coil section of Figure 2. However, the conduit 46' communicates with an inner conduit 81 of the coil 80 by means of a rear conduit 82 directly overlying the rear conduit 48'. The conduit 81 at its front connects to the rearwardly extending outer right hand conduit 83 which in turn communicates through a conduit 84 with an inclined sinuous enlarged diameter conduit 85 which forms a box-cooling coil positioned laterally of the ice freezing coils which are indicated generally at 86. The conduit 85 is of enlarged diameter with respect to the conduits forming the ice freezing evaporator 86 and is continuously sloped downwardly in order to provide for gravity flow of liquid refrigerant therethrough.

The outer end of the conduit 85 communicates at 21 with the rich inert gas discharge conduit and liquid refrigerant is supplied adjacent the connection of the conduit 21 through the liquid refrigerant supply conduit 29 which, as will be explained hereinbelow, connects to the condenser C.

It will be understood that this evaporator is designed and intended to be utilized in connection with the refrigerating system disclosed in Figure 1 and that the conduits 25, 33, 21 and 29 connect into the remainder of the refrigerating system in exactly the manner in which conduits bearing the same numerals are connected into the system in the apparatus shown in Figure 1.

The liquid refrigerant which flows through the conduit 85 is drained therefrom through a U-shaped liquid seal conduit 87 into the conduit 49' of the coil section 80 adjacent its point of connection with the riser conduit 44'.

A small dam 38 is provided at this point in order to prevent liquid refrigerant from flowing down through the conduit 44' in the event that the apparatus as installed should be tipped slightly.

In this evaporator as in those discussed hereinabove the liquid refrigerant flows through the box-cooling conduit 85 by gravity in counterflow relationship with the inert gas. After traversing the conduit 85 the liquid refrigerant is drained through the conduit 87 into the coil section 80 through which it is circulated by the high velocity stream of inert gas flowing therethrough and is then drained through the conduit 52' to the subjacent coil section 41' through which it is again circulated by the inert gas and is then drained from the coil section 41' through the conduit 51' into the coil section 40' through which it is again circulated by the inert gas and any residue material is then conveyed through the conduit 33 to the strong solution circuit.

Consequently, in this evaporator like the one disclosed in connection with Figure 2, the inert gas and liquid refrigerant flow through the box-cooling conduit in counterflow relationship with the liquid refrigerant flowing under the influence of gravity. In the horizontal ice freezing coils, however, the liquid refrigerant flows generally in counterflow relationship with the inert gas through these coils considered as a whole. However, at all points of gas and liquid contact the gas and liquid flows in the same direction and the liquid is circulated not by gravity but by the inert gas itself.

Referring now to Figures 6 and 7, the arrangement of the evaporator of Figure 5 in connection with a cabinet is illustrated.

The apparatus will be provided with a suitable insulated cabinet 90 which will be provided with an air cooling flue 91 extending along the rear wall thereof. It will be understood that this cabinet will be provided with a mechanism compartment underlying the refrigerated chamber 92 which is enclosed within the insulated cabinet 90. The generator, absorber and connecting conduits may be arranged in any desired manner in this portion of the apparatus and the same will be provided with suitable air openings to allow cooling air to circulate over the absorber and to flow upwardly through the flue 91.

As is shown in Figures 6 and 7, the ice freezing evaporator 86 is positioned in the upper left hand corner of the compartment 92 and the air cooling conduits 85 project laterally therefrom to the right. The condenser C is positioned in the upper portion of the flue 91 directly behind the evaporator. The gas heat exchanger 24 is also positioned in the flue 91 and connects to the evaporator by the conduits 21 and 25.

The rear wall of the cabinet 90 is provided with an opening 93 which is adapted to be sealed by an insulated closure element 96 and a sealing gasket 96. The opening 93 is of such size that the entire evaporator assembly may be inserted therethrough into the chamber 92. The liquid refrigerant supply conduit 29, the inert gas conduits 21 and 25 and drain conduit 33 all pass through the closure element 94.

The evaporator assembly 96 is enclosed within an insulated casing element 95 which completely surrounds and is spaced from the coils 86. Each of the coil sections 40', 41' and 80 is positioned in a horizontal plane and supports light weight sheet metal plates 97 which are constructed of material having an appreciable heat conductivity. The outer edges of the plates 97 are turned down as at 98 and are suitably secured to the inner wall of the casing 95. The rear ends of the plates 97 resting upon the coil sections 40' and 41' are turned upwardly as indicated at 99 in order to form a rear stop for the ice freezing trays 100. The upper plate 97 resting upon the coil 80 is adapted to receive and support a refrigerator drawer 101 adapted for the refrigeration of foodstuffs, such as meat and the like which require low temperature cooling for safekeeping. The plates 97 terminate short of the rear wall of chamber 95 and the gas and liquid conduits 43', 44', 51' and 52', respectively, are arranged rearwardly of the rear edges of plates 97.

The front wall of the chamber 95 is closed by a suitable hinged door element 102. The space between the top wall of the casing 95 and the top wall of the chamber 92 is hidden in the front by a plate 103. A control mechanism 104 is mounted on the top wall of the casing 95 behind the plate 103 and an adjusting knob 105

for the control mechanism is positioned on the front wall of the plate 103.

The laterally projecting enlarged diameter sinuous box-cooling conduit 85 is provided with a plurality of cooling fins 110 which extend across that portion of the upper part of the chamber 92 not occupied by the freezing chamber 95 and are sloped on their bottom edge as indicated at 111 in order to drain condensate to the end thereof adjacent the casing 95. A suitabl drip trough 112 is positioned on the outer side wall of the casing 95 and underlies the lower end of the fins 111. This trough 112 may drain into a suitable receptacle, not shown, positioned along the rear wall of the cabinet 90 or it may be provided with an exterior drain as desired.

A suitable shelf 115 is positioned in the upper portion of the cabinet beneath the level of the chamber 95 and is provided with a depressed portion 116 which receives a drip tray 117 underlying the freezing chamber 95. A suitable conduit 118 is arranged to drain the trough 112 into the receptacle 117.

Due to the fact that the liquid refrigerant is positively propelled through the evaporator by the inert gas except in the drain conduits in which liquid falls through a substantially vertical path, the liquid is circulated by the positive propulsion of the gas and inaccuracies in manufacture and in installation of the apparatus do not cause the liquid to collect at a particular point or points in the evaporator, to interfere with the gas flow or to be unequally distributed in the evaporator. Such inequalities in manufacture or installation as may be met in ordinary practice will of course not be of sufficient magnitude to affect the circulation of the liquid through the rather steeply sloped conduit 85 or through the drain conduits in connecting with various adjacent vertical levels in the evaporator.

It is particularly characteristic of this invention that the freezing coils may be positioned in a horizontal plane wherefore the same may directly underlie and be in direct and intimate heat transfer relationship with the ice freezing tray. This is a marked step forward over the previous constructions in which the slope of the conduits made this substantially impossible.

The present evaporator construction also lends itself readily to the two-temperature arrangement shown in Figures 6 and 7 in which the ice freezing and air cooling sections of the evaporator are thermally segregated. Due to the fact that the lean gas flows first through the ice freezing evaporator the gas supplied to these air cooling evaporator sections is of a substantially high refrigerant concentration and evaporation will not occur in the box cooling evaporator at temperatures low enough to collect frost thereon when the evaporator conduit 85 is carrying substantially the entire air cooling load of the apparatus. The low temperature sections of the evaporator, that is, those sections which are positioned within the insulated housing 95 cannot come in contact with the air circulating through the compartment 92 and hence do not refrigerate the food storage compartment at any point to an unduly low temperature, do not collect frost from the air in the compartment 92, and do not exert an undue drying effect upon foodstuffs stored in the apparatus.

It is further of considerable importance that the ice freezing and low temperature refrigerating evaporator sections are positioned in direct and intimate heat transfer relationship with the ice trays and low temperature freezing drawer and are thermally very remote from the air within the food storage compartment. This insures a high efficiency and a high speed of refrigeration within the compartment 95 without producing deleterious effects within the compartment 92.

Due to the relatively high temperature at which the conduit 85 operates frost will not be collected on that conduit and its associated fins 110. However, some moisture will be condensed upon the fins 110 which will then drain into the trough 112 and from there through the conduit 118 into the drip tray 117 from which it may be disposed to a point of ultimate disposal from time to time.

It is characteristic of all the above described forms of the invention that the refrigerating effect is produced solely in the horizontal evaporator conduits. Refrigeration is not produced in the gas conduits conveying inert gas upwardly between superposed horizontal refrigerating coils or in the liquid conduits conveying liquid refrigerant downwardly between superposed horizontal refrigerating coils. Therefore, the refrigerating effect is concentrated beneath the chilling receptacles where it will do the most good.

The evaporators disclosed in all the figures may be arranged in a cabinet generally in the manner illustrated in Figures 6 and 7, though the evaporator of Figure 5 is particularly well adapted for that purpose. If an evaporator, such as that shown in Figure 2, were embodied in a cabinet the freezing chamber would be centrally positioned in the upper portion of the storage chamber of the cabinet and the box cooling element would directly overlie the evaporating element.

The evaporators above described are very efficient in that the liquid is propelled through the evaporating zones thereof by the inert gas stream. This relates the rates of flow of gas and liquid in the evaporator and also causes the liquid to be agitated thereby increasing the effective area of gas and liquid contact.

The inert gas positively drags or sweeps the liquid refrigerant through the gas and liquid contact conduits though the volume of gas circulating through the evaporator is several hundred times the volume of refrigerant supplied thereto per unit of time. Consequently, the velocity of the gas is much greater than the velocity of the liquid in the evaporator. This large discrepancy in volumes is advantageous in order to evaporate the liquid refrigerant efficiently and to produce temperatures gradient desirable for freezing ice and preserving foodstuffs.

The propelling power of the inert gas is a function of its density, pressure, and velocity of flow. In general, an increase in any one or more of these factors increases the propelling power of the gas stream. For example, it has been found that liquid ammonia will be propelled through an evaporator conduit of approximately one-half inch internal diameter by a propelled stream of nitrogen into which the refrigerant is evaporating with the system pressure ranging between 270 and 400 pounds per square inch and a pressure differential across the gas inlet and outlet connections to the evaporator of approximately two to four inches of water. These dimensions are cited by way of example only, and they are not limiting in any sense.

The inert gas flows through the evaporator conduits in a stream which propels a stream of

the liquid along the bottom of the conduit by the frictional drag between the liquid and the high velocity stream of gas. The liquid is also agitated by the gas stream passing thereover. Though the gas stream is described herein as travelling at a high velocity, that term is used in a relative sense as the velocity depends upon other conditions noted above; for example, in the particular embodiment of the invention disclosed and using a dense gas such as nitrogen the inert gas will be propelled through the evaporator with a velocity of a few feet per second.

While I have illustrated and described a few embodiments of my invention this is not to be taken in a limiting sense, but it is to be understood that my invention is capable of embodiment in numerous constructional forms without departing from the spirit of the invention or the scope of the appended claims.

I claim:

1. Refrigerating apparatus comprising an evaporator, said evaporator including a lower section and a finned upper box-cooling section serially connected together, means for supplying a propelled stream of inert gas to the lower portion of said evaporator to flow upwardly therein, means for supplying liquid refrigerant to said box-cooling coil, means for draining liquid refrigerant from said box-cooling coil to said lower section, the arrangement being such that the liquid flows in counterflow relationship to said inert gas stream in said box-cooling coil and in parallel relationship with said inert gas at all points of gas and liquid contact in said lower section.

2. Refrigerating apparatus including a pressure equalizing medium circuit having an absorber and an evaporator therein, said evaporator comprising a lower section and an upper box-cooling section serially connected together, a condenser extending below said box-cooling section, means for conveying liquid refrigerant from said condenser to the upper portion of said lower section, means for propelling a pressure equalizing medium through said circuit, said circuit being arranged to cause pressure equalizing medium to flow upwardly through said evaporator, a gas lift pump interconnecting the top portion of said lower evaporator section and said box-cooling coil, and means diverting a portion of the inert gas under pressure from said propelling means directly into said gas lift pump.

3. Refrigerating apparatus including an evaporator having an upper box-cooling section and a lower coil section comprising a series of vertically spaced serially connected coil elements, a condenser extending below said box-cooling coil and connected to discharge refrigerant into the highest of said coil sections, means for supplying a propelled stream of inert gas under pressure to the lowest portions of said evaporator, means operated by a propelled stream of said inert gas under pressure operable to elevate liquid refrigerant from said coil section into said box-cooling coil, and said evaporator including means arranged to drain liquid refrigerant downwardly therethrough from level to level therein and out of contact with said inert gas stream.

4. Refrigerating apparatus comprising an evaporator, said evaporator including a plurality of vertically spaced serially connected sections, means for supplying inert gas under pressure to the lowest portions of said evaporator, a condenser extending below the top portion of said evaporator and connected to discharge liquid refrigerant into an intermediate portion thereof, and means operated by inert gas under pressure adapted to elevate liquid refrigerant from the portion of said evaporator connected to said condenser to a higher portion thereof.

5. That improvement in the art of refrigeration which includes the steps of propelling a pressure equalizing medium through a circuit including an evaporating zone, supplying liquid refrigerant to said evaporating zone, propelling liquid through portions of said evaporating zone by the frictional drag of the pressure equalizing medium flowing through such zone and elevating liquid refrigerant between portions of said evaporating zone by introducing pressure equalizing medium supplied from said circuit into the liquid to elevate the same by gas lift action.

6. Absorption refrigerating apparatus comprising a solution circuit including a boiler and an absorber, an inert gas circuit including an evaporator and said absorber, means for liquefying refrigerant generated in said boiler and for supplying the same to said evaporator, means in said inert gas circuit for circulating the inert gas through said evaporator with a velocity sufficient to sweep or drag the refrigerant through said evaporator as it is evaporating into the inert gas to produce refrigeration.

7. Absorption refrigerating apparatus comprising a solution circuit including a boiler and an absorber, an inert gas circuit including an evaporator and said absorber, said evaporator including a plurality of sections positioned at different elevations, means for liquefying refrigerant generated in said boiler and for supplying the same to said evaporator, means in said inert gas circuit for circulating the inert gas through said evaporator with a velocity sufficient to sweep or drag the refrigerant through said evaporator as it is evaporating into the inert gas to produce refrigeration.

8. Absorption refrigerating apparatus comprising a solution circuit including a boiler and an absorber, an inert gas circuit including an evaporator and said absorber, said evaporator including a plurality of sections positioned at different elevations, means for liquefying refrigerant generated in said boiler and for supplying the same to the upper portion of said evaporator, means in said inert gas circuit for circulating the inert gas through said evaporator with a velocity sufficient to sweep or drag the refrigerant through said evaporator as it is evaporating into the inert gas to produce refrigeration.

9. Absorption refrigerating apparatus comprising a solution circuit including a boiler and an absorber, an inert gas circuit including an evaporator and said absorber, said evaporator including a plurality of sections positioned at different elevations, means for liquefying refrigerant generated in said boiler and for supplying the same to the upper portion of said evaporator, means in said inert gas circuit for circulating the inert gas through said evaporator with a velocity sufficient to sweep or drag the refrigerant through said evaporator as it is evaporating into the inert gas to produce refrigeration, and means for draining unevaporated liquid from each section of said evaporator to the next lowest section thereof and out of contact with the inert gas.

10. Absorption refrigerating apparatus comprising a solution circuit including a boiler and an absorber, an inert gas circuit including an evaporator and said absorber, said evaporator including a plurality of sections positioned at different elevations, means for liquefying refrig-

erant generated in said boiler and for supplying the same to the upper part of said evaporator, means in said inert gas circuit for circulating the inert gas upwardly through said evaporator with a velocity sufficient to sweep or drag the refrigerant through said evaporator as it is evaporating into the inert gas to produce refrigeration, and means for draining unevaporated liquid from each section of said evaporator to a lower section thereof out of contact with inert gas, whereby the gas and liquid flow in parallel relationship through said sections individually and in counterflow relationship through said sections as a group.

11. Absorption refrigerating apparatus comprising a solution circuit including a boiler and an absorber, an inert gas circuit including an evaporator and said absorber, means for liquefying refrigerant generated in said boiler and for supplying the same to said evaporator, said evaporator including a substantially horizontal conduit having a relatively small cross-sectional area, and means in said inert gas circuit for propelling the inert gas through said conduit under conditions such that the refrigerant is carried through such conduit by the inert gas into which it is evaporating to produce refrigeration.

12. Absorption refrigerating apparatus comprising a solution circuit including a boiler and an absorber, an inert gas circuit including an evaporator and said absorber, means for liquefying refrigerant generated in said boiler and for supplying the same to said evaporator, said evaporator comprising a plurality of substantially horizontal superposed serially connected shelf-like coil sections, and means in said inert gas circuit for propelling the inert gas through each of said sections under conditions such that the refrigerant is carried through such section by the inert gas into which it is evaporating to produce refrigeration.

13. Absorption refrigerating apparatus comprising a solution circuit including a boiler and an absorber, an inert gas circuit including an evaporator and said absorber, means for liquefying refrigerant generated in said boiler and for supplying the same to said evaporator, said evaporator including a substantially horizontal conduit having a relatively small cross-sectional area, means in said inert gas circuit for propelling the inert gas through said conduit under conditions such that the refrigerant is carried through such conduit by the inert gas into which it is evaporating to produce refrigeration, an upper finned large diameter box-cooling conduit through which inert gas and refrigerant flow in opposite directions connected to said horizontal conduit, and means for conveying unevaporated material from said box-cooling conduit into said horizontal conduit.

14. That improvement in the art of absorption refrigeration which includes the steps of applying heat to a solution of a refrigerant and an absorbent to liberate refrigerant vapor therefrom, conveying the resultant liquid refrigerant into an evaporating zone having a plurality of sections, flowing the refrigerant liquid through each of such sections by the frictional drag of an inert gas flowing thereover, conveying the inert gas and unevaporated liquid refrigerant between sections out of contact with each other and in opposite directions, flowing the resultant mixture of inert gas and refrigerant vapor into intimate contact with solution previously weakened in refrigerant vapor content by the application of heat thereto.

15. Refrigerating apparatus including an evaporator having a plurality of sections, means for circulating an inert gas through said evaporator in one direction with a velocity sufficient to propel liquid refrigerant therethrough by the frictional drag exerted on the liquid by the inert gas, means for supplying a refrigerant liquid to said evaporator for circulation therethrough in another direction, and means for conveying liquid refrigerant from one section of said evaporator to another section thereof by gravity and out of contact with the inert gas and in a direction generally counter to the direction of flow of the inert gas through said evaporator.

16. Absorption refrigerating apparatus comprising an absorber and an evaporator connected to form an inert gas circuit, a boiler connected to said absorber to form a solution circuit, means for liquefying refrigerant vapor produced in said boiler and for supplying the same to said evaporator, means for circulating the inert gas through said evaporator under conditions such that the liquid refrigerant is propelled therethrough by the inert gas as it is evaporating into the inert gas, a gas lift pump included in said solution circuit, and means for supplying pumping gas thereto.

17. An absorption refrigerating system comprising an evaporator element and an absorber element connected for circulation of an inert gas therebetween, means for supplying a refrigerant liquid to said evaporator element, means for supplying an absorption liquid to said absorber element, one of said elements including a plurality of sections, means for conveying liquid from one section to another section thereof out of contact with the inert gas and in a direction generally counter to the direction of inert gas flow through said one element, and means for forcing the inert gas through said one element with a velocity sufficient to drag the liquid refrigerant in the direction of flow of the inert gas independently of the force of gravity.

18. That improvement in the art of absorption refrigeration which includes the steps of circulating an absorbing solution between an absorbing zone in which refrigerant is added to the solution by contacting the same with a mixture of a pressure equalizing medium and refrigerant vapor and a generating zone in which refrigerant vapor is removed from the solution by the application of heat thereto, passing the vapor produced in the generating zone in heat exchange with cooling air to convert the vapor to liquid, supplying said liquid to an evaporating zone, circulating the pressure equalizing medium refrigerant vapor mixture through the absorbing zone and through the evaporating zone under conditions such that the liquid is distributed through the evaporating zone as it is evaporating into the pressure equalizing medium by the frictional drag exerted thereon by the pressure equalizing medium refrigerant vapor mixture flowing through such zone.

19. An absorption refrigerating system comprising an evaporator element and an absorber element connected for circulation of an inert gas therebetween, means for supplying a refrigerant liquid to said evaporator element, means for supplying an absorption liquid to said absorber element, one of said elements including a plurality of sections connected for flow of inert gas therethrough and means for conveying liquid from

one of said sections to another of said sections out of contact with the gas flowing through said sections in a direction counter to the general direction of gas flow through said sections, and means for propelling the inert gas through said sections with a velocity sufficient to propel the liquid therethrough by the frictional drag of the inert gas whereby the gas and liquid flow through said one element as a whole in opposite directions and flow in the same direction at all points of gas and liquid contact.

20. That improvement in absorption refrigeration systems of the type involving the expulsion of refrigerant vapor from solution in an absorbing liquid, conversion of the vapor to the liquid state, evaporation of the refrigerant liquid into an inert gas in an evaporation zone and absorption of the refrigerant into absorbing liquid in an absorbing zone which includes the steps of propelling the inert gas through one of said zones with a velocity sufficient to propel the liquid therethrough by the frictional drag of the gas stream flowing thereby.

21. Absorption refrigerating apparatus comprising a generator, a condenser connected to receive refrigerant vapor from said generator, an evaporator including an element forming an unobstructed elongated passageway, means for supplying liquid refrigerant from said condenser to said element, an absorber connected to said evaporator and to said generator to form inert gas and absorption solution circuits respectively, means in said inert gas circuit for forcing inert gas to flow through said passageway with a velocity sufficient to circulate liquid refrigerant therethrough by the frictional drag of the inert gas whereby the high velocity gas stream substantially continuously scrubs the inner wall of said element to provide good heat transfer relationship between the inert gas and said element.

22. Absorption refrigeration apparatus comprising an element in which an inert gas is brought into contact with a liquid to effect a transfer of refrigerant vapor between the liquid and the gas which is accompanied by a transfer of heat through said element between the liquid and gas and the medium surrounding said element, said element having a plurality of vertically spaced sections which are serially connected for a flow of gas therethrough, means for supplying the liquid to an intermediate one of said sections, means for circulating gas upwardly through said element, a gas lift pump for elevating liquid from an intermediate one of said sections to a higher one of said sections, means for supplying pumping gas to said pump, and means for conveying the liquid downwardly through said element from each section to a lower section out of contact with the gas flowing through said sections.

23. A refrigerating system including a pressure equalizing medium circuit having an absorber and an upstanding evaporator therein, a solution circuit having a generator and said absorber therein arranged for gravity flow of solution through said absorber, said evaporator and absorber being so arranged in said pressure equalizing medium circuit that the pressure equalizing medium flows upwardly therethrough, means for liquefying refrigerant vapor produced in said generator and for supplying the liquid to the upper portion of said evaporator, means in said pressure equalizing medium circuit for propelling the pressure equalizing medium through said evaporator under conditions such that the liquid refrigerant is circulated by the impetus imparted thereto by the pressure equalizing medium, means arranged to withdraw refrigerant liquid from one portion of said evaporator and to return the liquid to said evaporator at a lower elevation, said means being so arranged with respect to the flow of pressure equalizing medium through said evaporator that the liquid and pressure equalizing medium flow in the same direction when they are in contact and in in opposite directions through the evaporator as a whole whereby the downwardly flowing liquid is removed from contact with pressure equalizing medium of a certain refrigerant vapor content and is conveyed into contact with pressure equalizing medium of a lower refrigerant vapor content.

24. An evaporator for use in three-fluid absorption refrigerating machines comprising means forming an elongated gas and liquid evaporating passageway having a plurality of vertically spaced serially connected substantially horizontal sinuous sections adapted to underlie and refrigerate ice trays, means providing for the supply of an inert gas to said evaporating passageway, means providing for the supply of a refrigerant liquid to said evaporating passageway, means providing for the removal of inert gas and refrigerant vapor from said evaporating passageway, means for removing non-gaseous matter from said passageway, and means providing for flow of inert gas and refrigerant liquid between adjacent horizontal sections of said evaporator and out of contact with each other.

25. In an absorption refrigerating apparatus a generator, an absorber, a condenser, an evaporator, means providing for circulation of absorption solution between said generator and said absorber, means for conducting refrigerant vapor from said generator to said condenser, means for conducting refrigerant liquid from said condenser to said evaporator, said evaporator including a substantially horizontal section arranged to refrigerate an ice tray, and means providing for circulation of an inert gas between said evaporator and said absorber, said apparatus being so constructed and arranged that the refrigerant liquid is circulated through said horizontal section of said evaporator by the inert gas.

26. Absorption refrigerating apparatus comprising a generator, a condenser, an evaporator including a substantially horizontal sinuous passageway, an absorber, means providing for the circulation of an absorption solution between said absorber and said generator, means for conducting refrigerant vapor from said generator to said condenser, means for conducting refrigerant liquid from said condenser to said evaporator, a shelf lying upon said evaporator passageway and in direct heat transfer relationship therewith, an ice tray resting upon said shelf directly above said passageway, means providing for circulation of inert gas between said evaporator and said absorber, said passageway being so constructed and arranged that the liquid refrigerant is circulated through said passageway by the inert gas, and a casing enclosing said coil, plate and tray.

27. In combination a three-fluid absorption refrigerating apparatus including a generator and an absorber connected for circulation of absorption solution, an evaporator and said absorber connected for circulation of inert gas, means for liquefying refrigerant vapor produced by said generator, means for conducting refrigerant li-

quid from said liquefying means to said evaporator, said evaporator comprising a plurality of vertically spaced serially connected substantially horizontal sinuous conduits and a finned sinuous conduit positioned laterally of said first mentioned sinuous conduits and serially connected thereto, and said evaporator being so constructed and arranged that the inert gas and liquid refrigerant flow in counterflow relationship in said finned conduit and the liquid refrigerant is circulated through said substantially horizontal conduits by the inert gas.

28. Absorption refrigerating apparatus comprising a cabinet structure including an insulated refrigerating chamber, an insulated freezing compartment positioned in the upper portion of said chamber, an evaporator having a low temperature freezing portion in said compartment and a finned air cooling portion positioned laterally of said compartment in said chamber, said low temperature portion of said evaporator including a plurality of horizontal gas and liquid passageway forming means adapted to underlie and refrigerate freezing receptacles and arranged out of heat conducting relationship with the exterior walls of said compartment, means for producing liquid refrigerant and for supplying the liquid to said finned portion of said evaporator, means for conducting liquid refrigerant from said finned portion of said evaporator to the low temperature portion of said evaporator, means for circulating an inert gas upwardly through the low temperature portion of said evaporator with sufficient velocity and pressure to propel the liquid refrigerant through said horizontal passageway forming means by the frictional drag of the inert gas, means for conducting refrigerant vapor produced in the low temperature portion of said evaporator and inert gas which has passed through the low temperature portion of said evaporator to said finned portion of said evaporator.

29. Absorption refrigerating apparatus comprising an evaporator, a generator, a condenser, an absorber, means providing for circulation of absorption solution between said generator and said absorber, means providing for circulation of inert gas between said absorber and said evaporator, means for liquefying refrigerant vapor produced in said generator, said evaporator including a plurality of substantially horizontal shelf-like gas and liquid passageway forming means positioned in vertically spaced relationship, means for conducting refrigerant liquid from said liquefying means to said evaporator, means for conducting refrigerant liquid from each of said passageway forming means after the liquid has passed therethrough to a lower one of said passageway forming means, and means for conducting inert gas between said passageway forming means out of contact with liquid refrigerant, whereby said liquid refrigerant and inert gas flow through said horizontal passageways in contact with each other to produce a refrigerating effect and no refrigerating effect is produced between said horizontal passageway forming means.

30. Absorption refrigerating apparatus comprising a cabinet structure including an insulated refrigerating chamber and an air cooled mechanism chamber, an absorption refrigerating apparatus associated with said cabinet structure including an evaporator in said refrigerating chamber, an absorber in said mechanism chamber, a generator in said mechanism chamber, an air cooled condenser in said mechanism chamber, means providing for circulation of absorption solution between said generator and said absorber, means providing for circulation of inert gas between said evaporator and said absorber, means for conducting refrigerant vapor from said generator to said condenser, said evaporator including a plurality of sinuous substantially horizontal conduits positioned in vertically spaced relationship, shelf elements overlying and in heat transfer relationship with said conduits, means for conducting liquid refrigerant from said condenser to the highest of said conduits, means for draining refrigerant liquid that has passed through each conduit to a lower conduit and out of contact with inert gas, means for conducting inert gas between said conduits out of contact with liquid refrigerant, and means for removing unevaporated material from the lowest of said conduits, the construction and arrangement being such that the evaporation of refrigerant is confined to areas of said evaporator directly underlying said shelf elements.

31. Absorption refrigerating apparatus including a generator, a condenser, an absorber, an evaporator including a plurality of substantially horizontal evaporator passageways, means providing for the circulation of absorption solution between said generator and said absorber, means providing for the circulation of inert gas between said generator and said evaporator, means for conducting refrigerant vapor from said generator to said condenser and for conducting refrigerant liquid from said condenser to said evaporator, a plurality of ice trays resting upon said evaporator passageways, and an evaporator casing completely enclosing said passageways and said trays, said apparatus being so constructed and arranged that the liquid refrigerant is circulated through said passageways by the inert gas.

32. Absorption refrigerating apparatus comprising a cabinet structure including an insulated refrigerating chamber and an air cooled mechanism chamber, an absorption refrigerating apparatus associated with said cabinet structure including an evaporator in said refrigerating chamber, an absorber in said mechanism chamber, a generator in said mechanism chamber, an air cooled condenser in said mechanism chamber, means providing for circulation of absorption solution between said generator and said absorber, means providing for circulation of inert gas between said evaporator and said absorber, means for conducting refrigerant vapor from said generator to said condenser, said evaporating including a plurality of sinuous substantially horizontal conduits positioned in vertically spaced relationship, shelf elements overlying and in heat transfer relationship with said conduits, means for conducting liquid refrigerant from said condenser to the highest of said conduits, means for draining refrigerant liquid that has passed through each conduit to a lower conduit and out of contact with inert gas, means for conducting inert gas between said conduits out of contact with liquid refrigerant, means for removing unevaporated material from the lowest of said conduits, and a casing enclosing said evaporator, said shelves and said gas and liquid conducting means, said shelf elements terminating short of the rear wall of said casing and said gas and liquid conducting means being arranged rearwardly of said shelf elements, the construction and arrangement being such that the evaporation of refrigerant is confined to areas of said evaporator directly underlying said shelf elements.

33. Absorption refrigerating apparatus including a generator, a condenser, an absorber, an evaporator including a plurality of substantially horizontal sinuous evaporator conduits positioned in vertically spaced relationship and serially connected by upstanding conduits, means providing for the circulation of absorption solution between said generator and said absorber, means providing for the circulation of inert gas between said generator and said evaporator, means for conducting refrigerant vapor from said generator to said condenser and for conducting refrigerant liquid from said condenser to said evaporator, a plurality of ice trays resting upon said sinuous conduits, and an evaporator casing completely inclosing said conduits and said tray, said apparatus being so constructed and arranged that the liquid refrigerant is circulated through said horizontally positioned sinuous conduits by the inert gas.

34. Absorption refrigerating apparatus comprising a cabinet structure including an insulated refrigerating chamber and an air cooled mechanism chamber, an absorption refrigerating apparatus associated with said cabinet structure including an evaporator in said refrigerating chamber, an absorber in said mechanism chamber, a generator in said mechanism chamber, an air cooled condenser in said mechanism chamber, means providing for circulation of absorption solution between said generator and said absorber, means providing for circulation of inert gas between said evaporator and said absorber, means for conducting refrigerant vapor from said generator to said condenser, said evaporator including an elongated horizontal conduit of small diameter arranged to form a shelf-like coil, an ice tray supporting shelf lying on said coil, means for conducting refrigerant liquid from said condenser to said coil, said apparatus being so constructed and arranged that the liquid refrigerant is circulated through said elongated conduit by the inert gas.

35. Absorption refrigerating apparatus comprising a cabinet structure including an insulated refrigerating chamber and an air cooled mechanism chamber, an absorption refrigerating apparatus associated with said cabinet structure including an evaporator in said refrigerating chamber, an absorber in said mechanism chamber, a generator in said mechanism chamber, an air cooled condenser in said mechanism chamber, means providing for circulation of absorption solution between said generator and said absorber, means providing for circulation of inert gas between said evaporator and said absorber, means for conducting refrigerant vapor from said generator to said condenser, said evaporator including a freezing section and a sinuous air cooling conduit positioned laterally of said freezing section, said freezing section being positioned in the upper portion of said refrigerating chamber, an insulated housing around said freezing section, a plurality of fins thermally bonded to said sinuous conduit, said fins being so constructed and arranged that their lower edges slope downwardly toward and terminate closely adjacent to a wall of said housing, and a drip trough on the wall of said housing underlying the lower ends of said fins.

CURTIS C. COONS.