US 20090242161A1

(19) **United States**

(12) **Patent Application Publication**

Uchida et al.

(10) **Pub. No.: US 2009/0242161 A1**

(43) **Pub. Date: Oct. 1, 2009**

(54) **INJECTION DEVICE FOR DIE CASTING MACHINE**

(76) Inventors: **Masashi Uchida**, Yamaguchi (JP); **Kazuki Hiraizumi**, Yamaguchi (JP)

Correspondence Address:
IP GROUP OF DLA PIPER LLP (US)
ONE LIBERTY PLACE, 1650 MARKET ST, SUITE 4900
PHILADELPHIA, PA 19103 (US)

(21) Appl. No.: **12/441,406**

(22) PCT Filed: **Sep. 19, 2007**

(86) PCT No.: **PCT/JP2007/068734**

§ 371 (c)(1),
(2), (4) Date: **Mar. 16, 2009**

(30) **Foreign Application Priority Data**

Sep. 20, 2006	(JP)	2006-254002
Nov. 30, 2006	(JP)	2006-324000
May 30, 2007	(JP)	2007-143347

Publication Classification

(51) **Int. Cl.**

B22D 17/00	(2006.01)
B22D 17/32	(2006.01)
B22C 19/04	(2006.01)
B22D 17/04	(2006.01)

(52) **U.S. Cl.** **164/113**; 164/314; 164/151; 164/315

(57) **ABSTRACT**

In a hybrid injection system of a die casting machine, the occurrence of a large electric power loss can be prevented by avoiding a large current at a pressure-holding step and the size of a motor is reduced.

In an injection system comprising an injection cylinder (**16**) housing an injection piston (**15**) for injecting molten metal to a mold and an electric booster (**8**) of hydraulic cylinder type, a head chamber (**8**H) to the electric booster communicates fluidly with a head chamber (**16**H) of the injection cylinder, causing a booster piston rod (**5**) to be housed in the electric booster (**8**) to move linearly and thus pressing under pressure to move the injection piston to perform injection molding. Because a stop valve (**25**) is provided in a pipe that causes the head chamber (**16**H) of the injection cylinder to communicate with a rod chamber (**8**R) of the booster (**8**), it is possible for the pressure of the hydraulic oil to act on a head area of the electric booster at a pressure-increasing step for increasing pressure of the molten metal, and for pressure of the hydraulic oil to act on a rod area of the electric booster at a pressure-holding step for holding pressure of the molten metal.

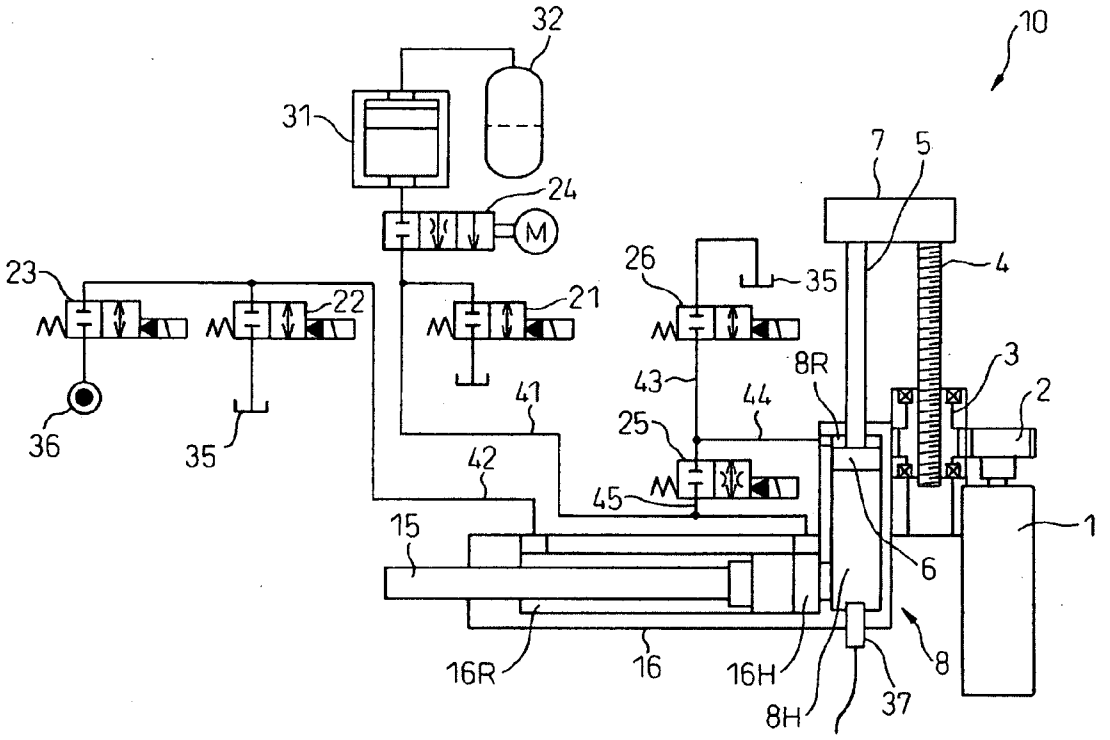

Fig.1

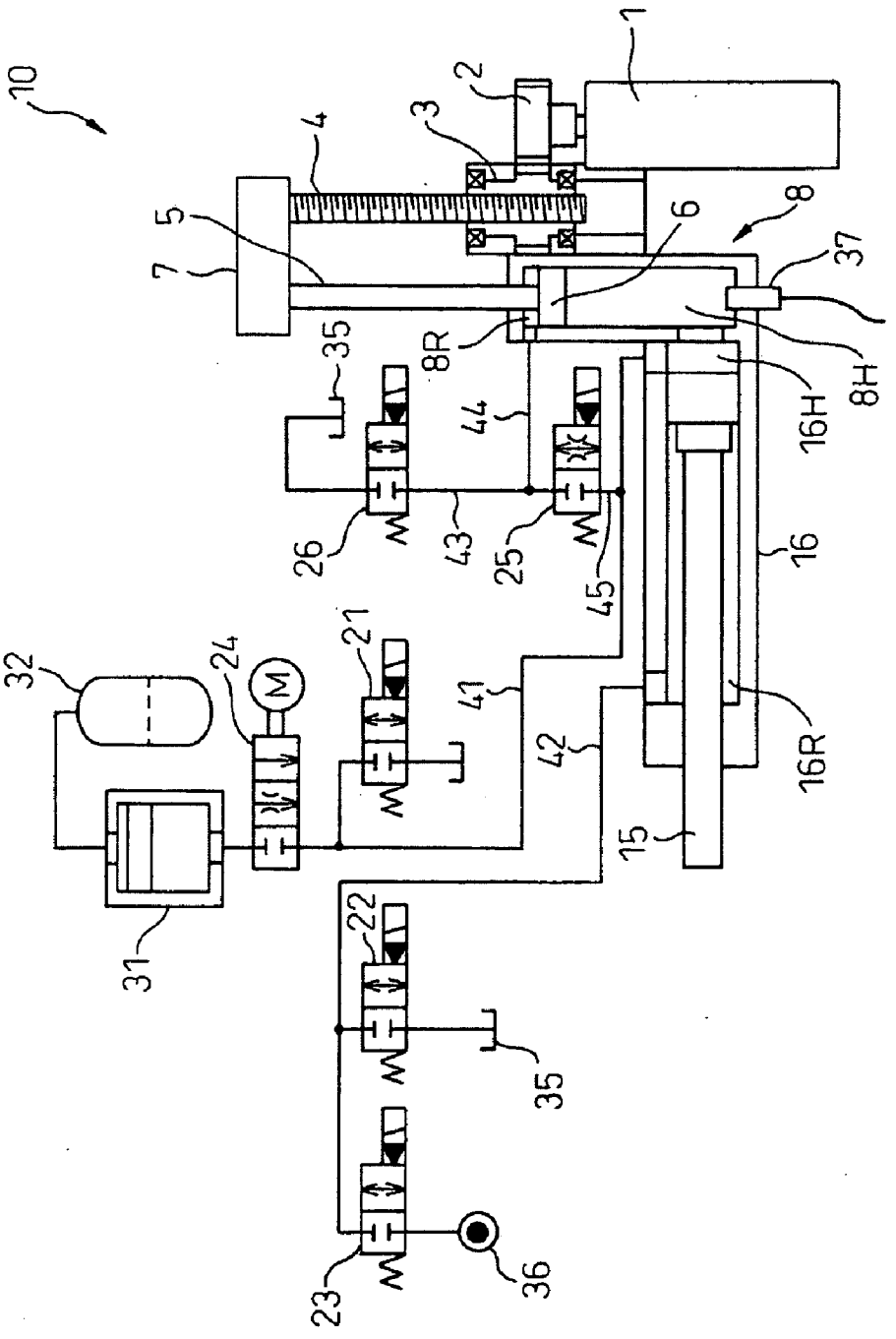
10
1
2
3
4
5
6
7
8
8R
8H
16
16H
16R
15
21
22
23
24
25
26
31
32
35
36
37
41
42
43
44
45
M

Fig. 2a

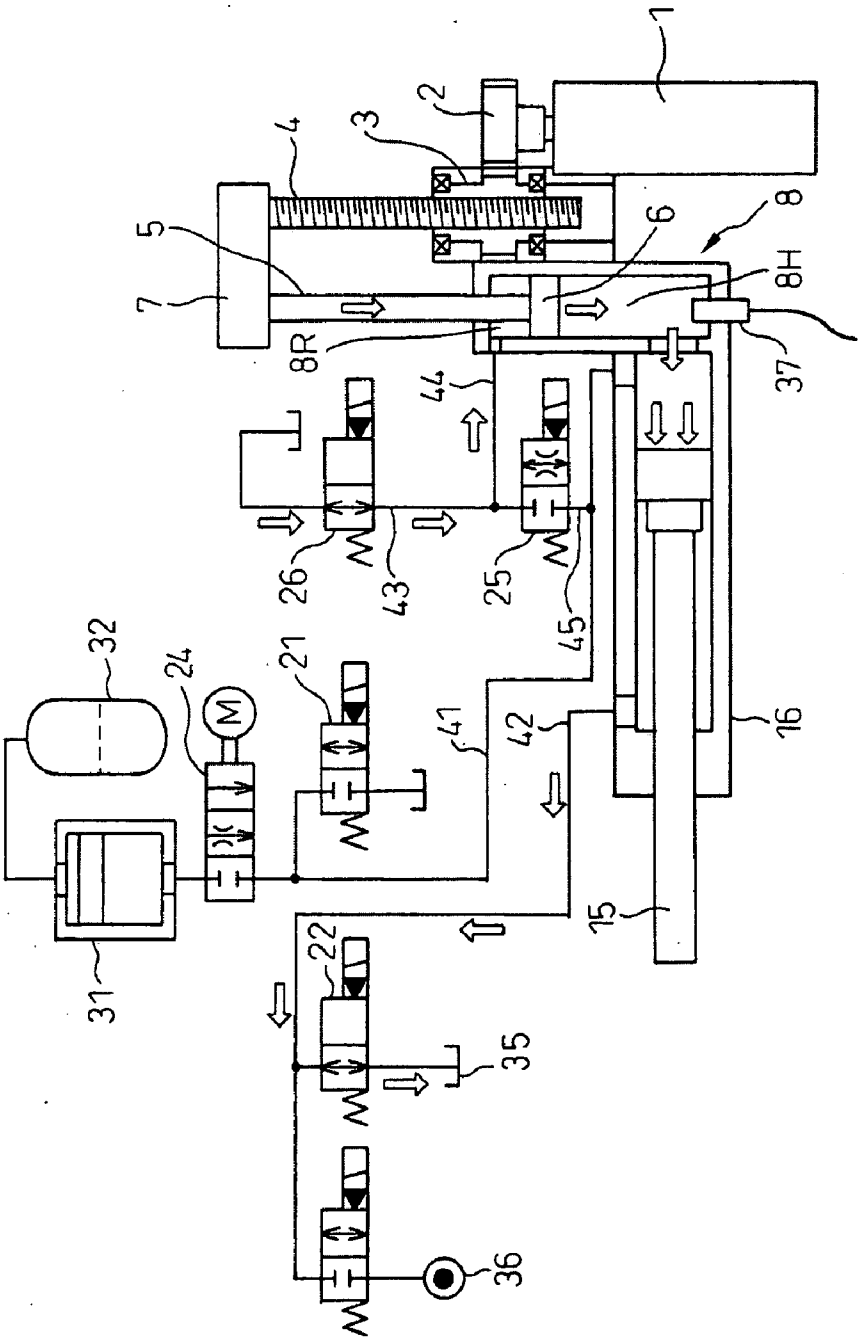

Fig. 2b

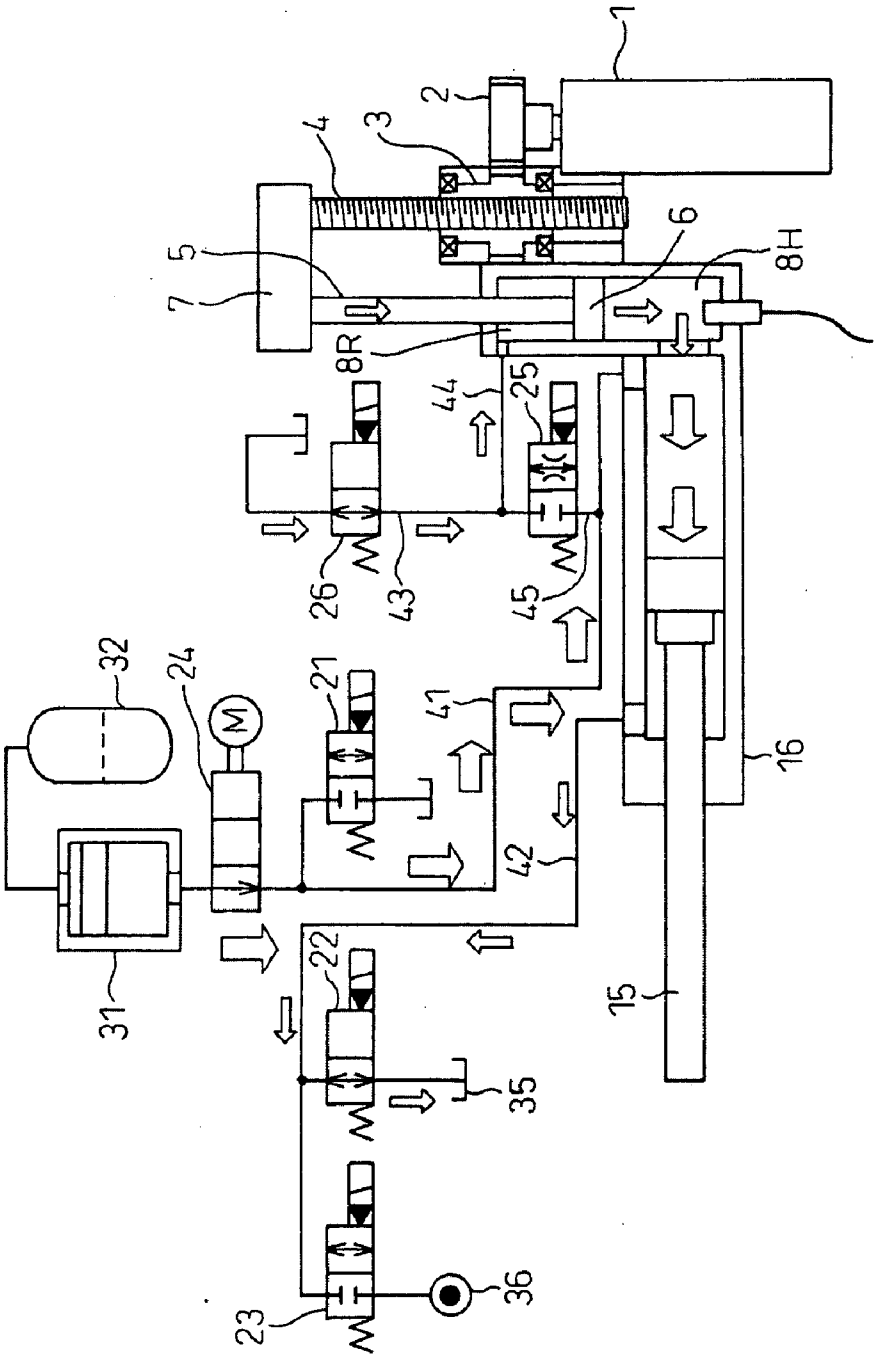

Fig. 2c

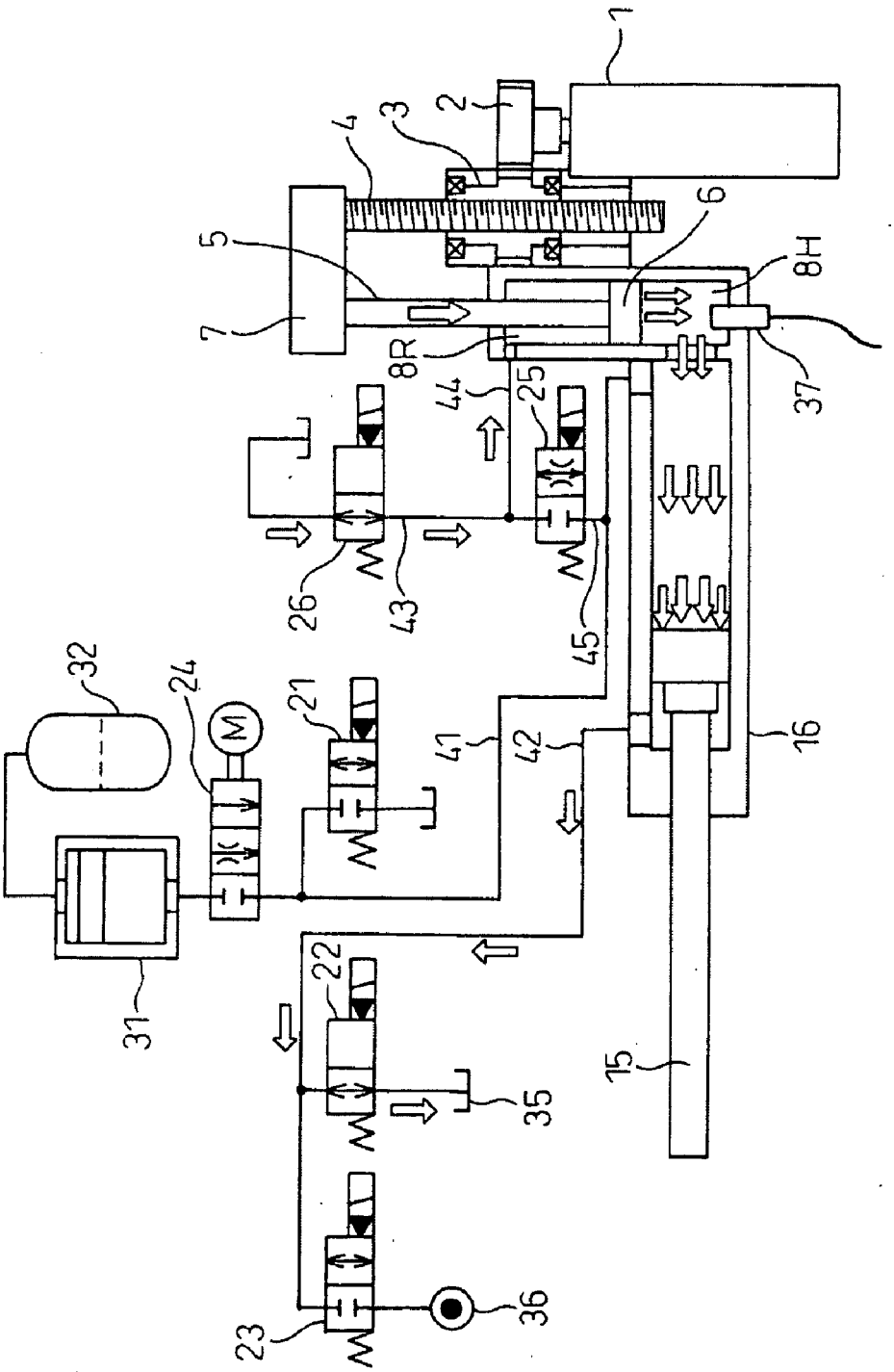

Fig. 2d

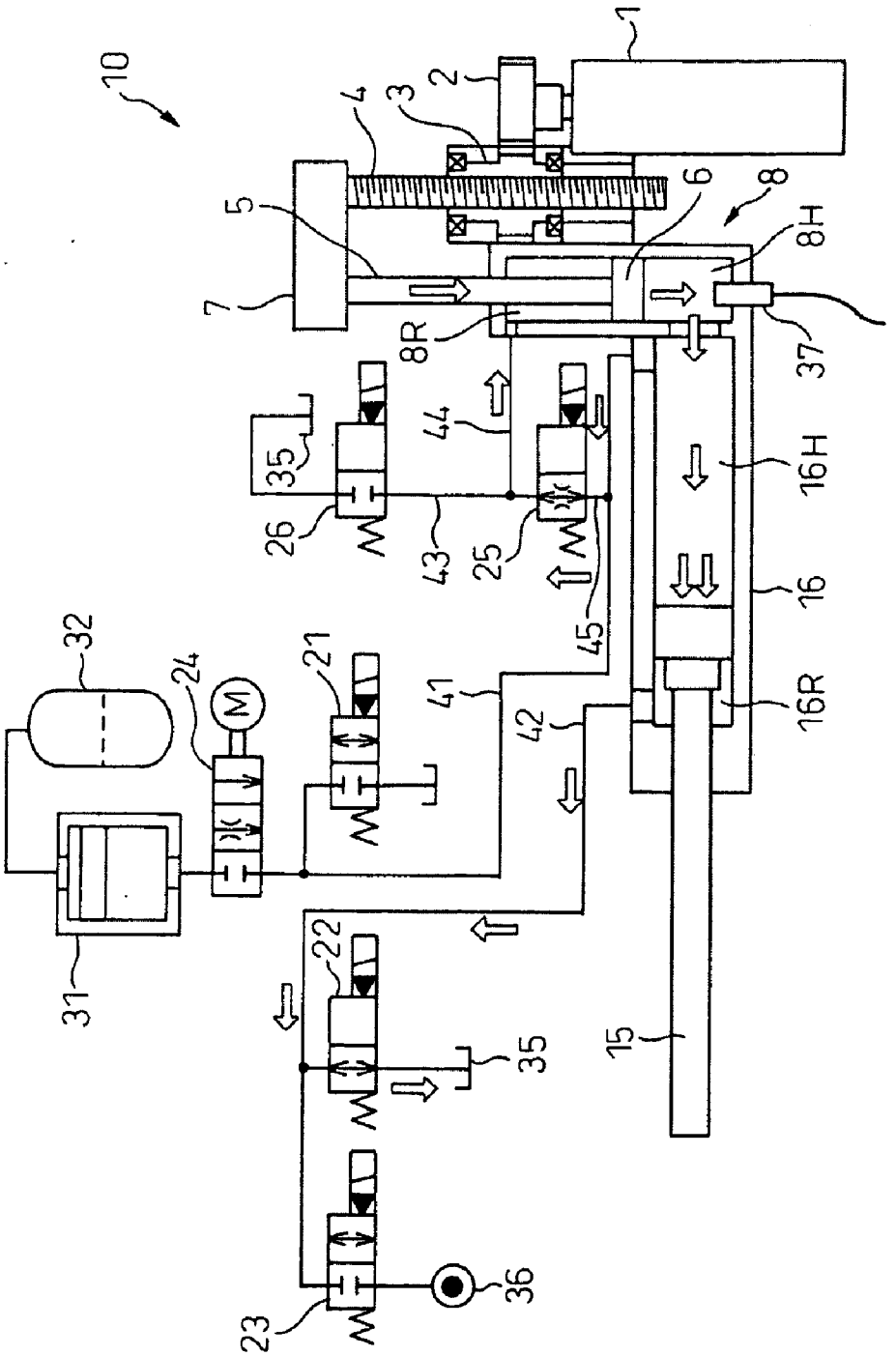
10
1
2
3
4
5
6
7
8
8H
8R
16
16H
16R
15
21
22
23
24
25
26
31
32
35
36
37
41
42
43
44
45
M

Fig. 2e

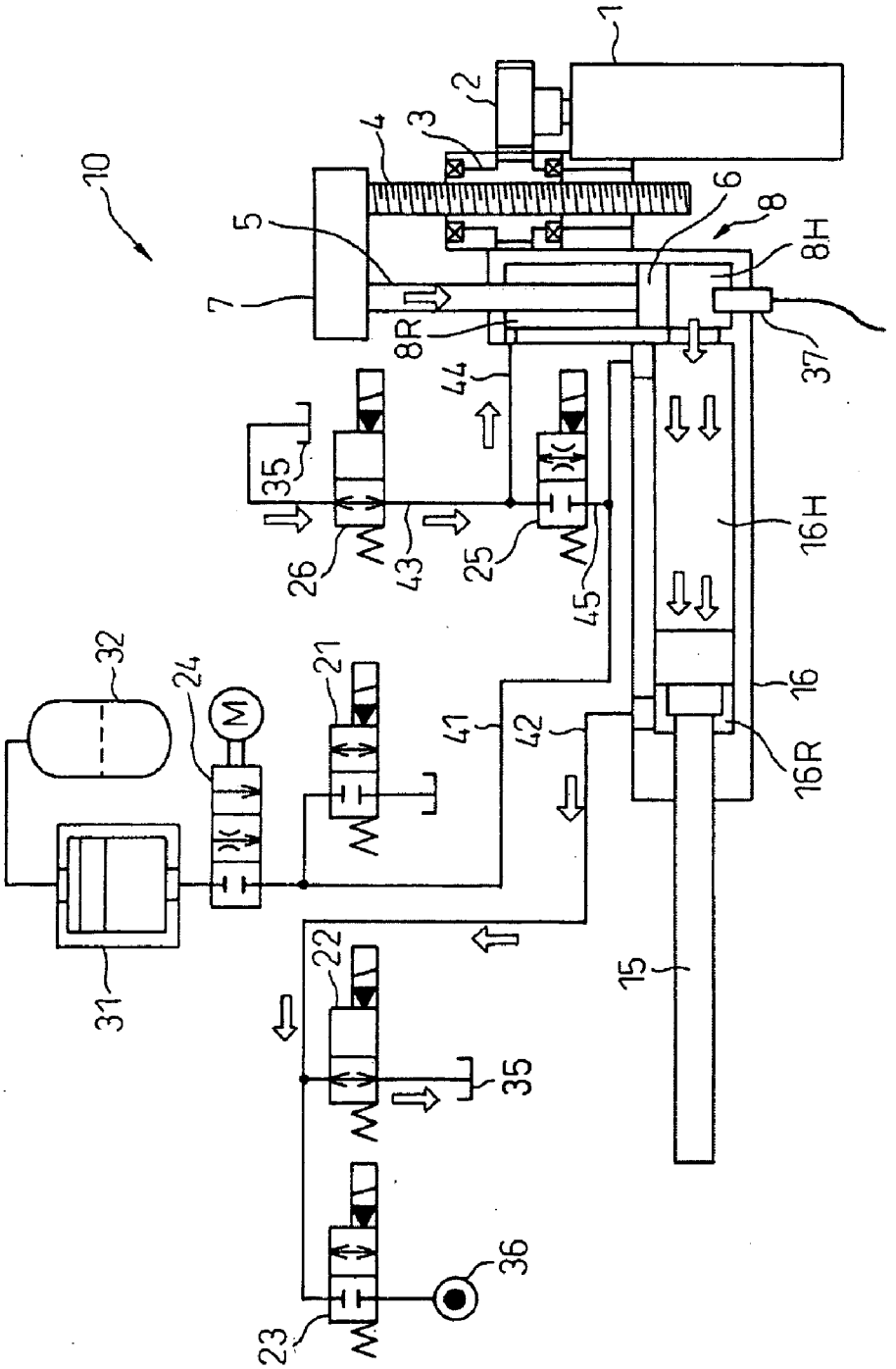
10
1
2
3
4
5
6
7
8
8H
8R
15
16
16H
16R
21
22
23
24
25
26
31
32
35
36
37
41
42
43
44
45
M

Fig.2f

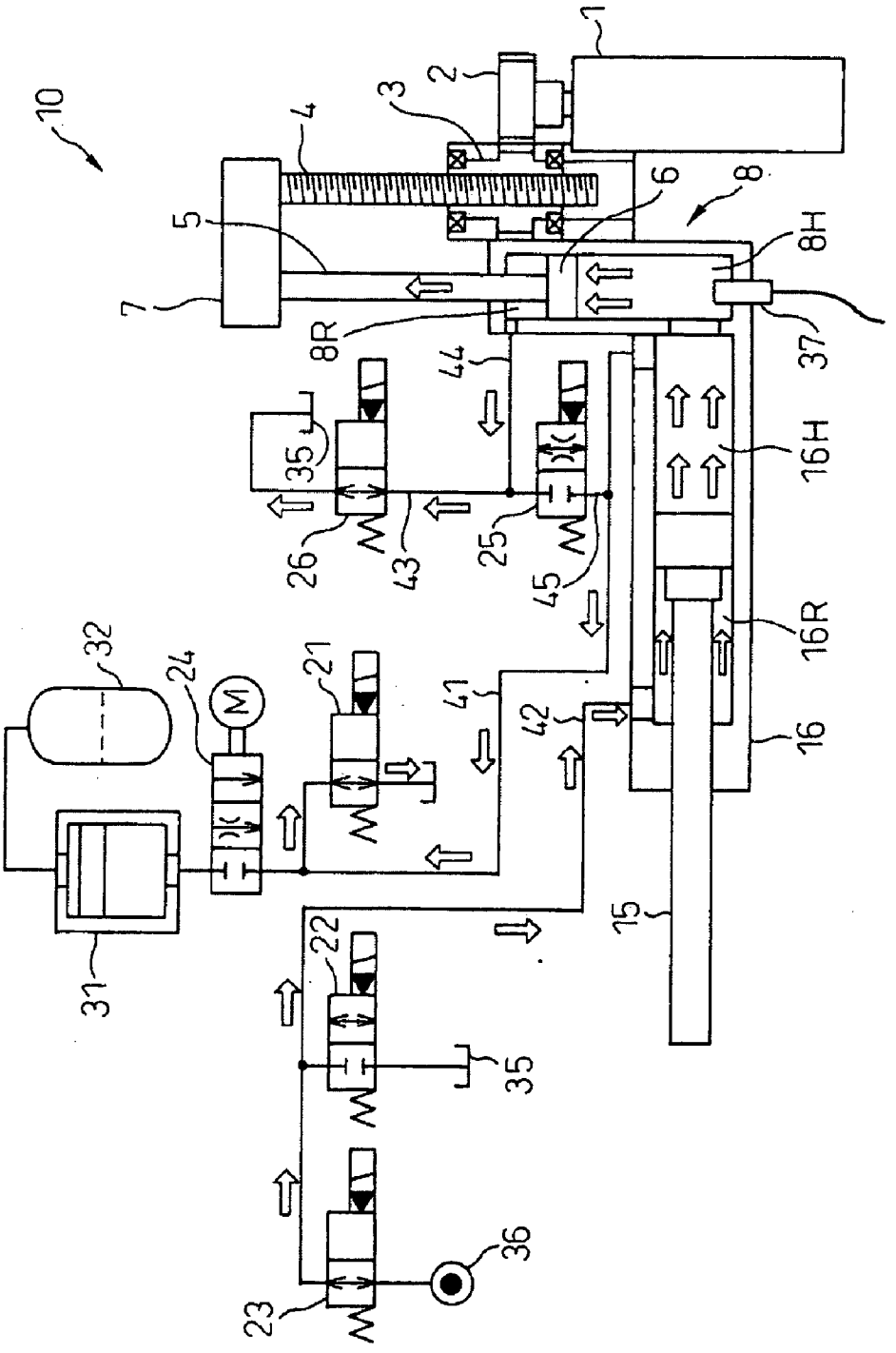
10
1
2
3
4
5
6
7
8
8H
8R
16H
16R
16
15
31
32
24
21
22
23
25
26
35
36
37
41
42
43
44
45

Fig.3

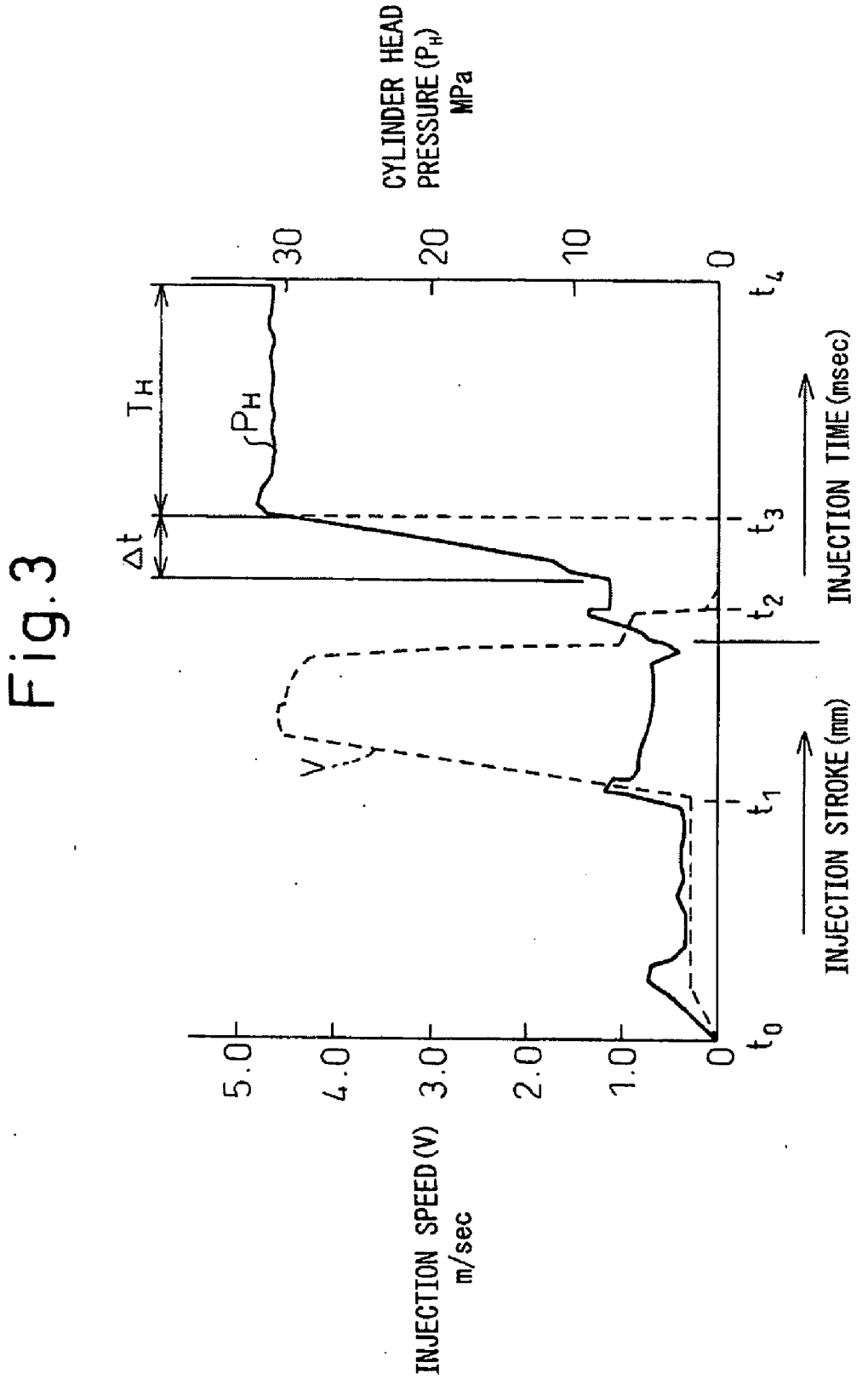
CYLINDER HEAD PRESSURE (P_H) MPa
30
20
10
0
T_H
P_H
Δt
t_4
t_3
t_2
t_1
t_0
INJECTION TIME (msec)
INJECTION STROKE (mm)
V
5.0
4.0
3.0
2.0
1.0
0
INJECTION SPEED (V) m/sec

Fig. 4

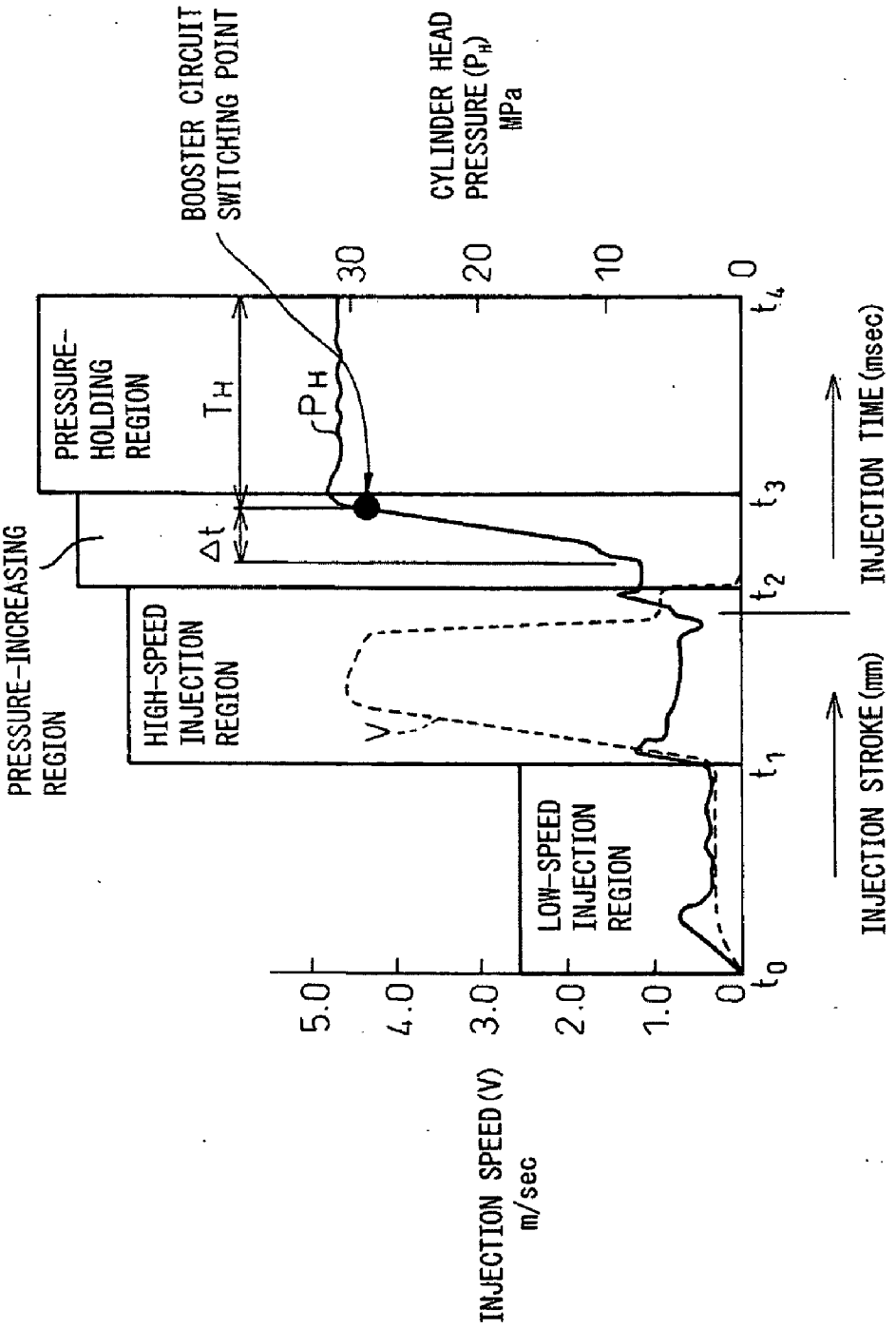
BOOSTER CIRCUIT SWITCHING POINT
CYLINDER HEAD PRESSURE (P_H) MPa
30
20
10
0
PRESSURE-HOLDING REGION
T_H
P_H
Δt
PRESSURE-INCREASING REGION
HIGH-SPEED INJECTION REGION
V
LOW-SPEED INJECTION REGION
t_0
t_1
t_2
t_3
t_4
INJECTION TIME (msec)
INJECTION STROKE (mm)
INJECTION SPEED (V) m/sec
5.0
4.0
3.0
2.0
1.0
0

Fig. 5

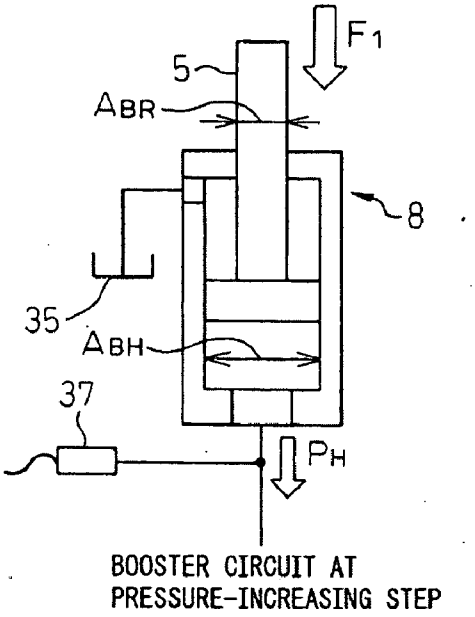
F1
5
ABR
8
35
ABH
37
PH
BOOSTER CIRCUIT AT
PRESSURE-INCREASING STEP

Fig. 6

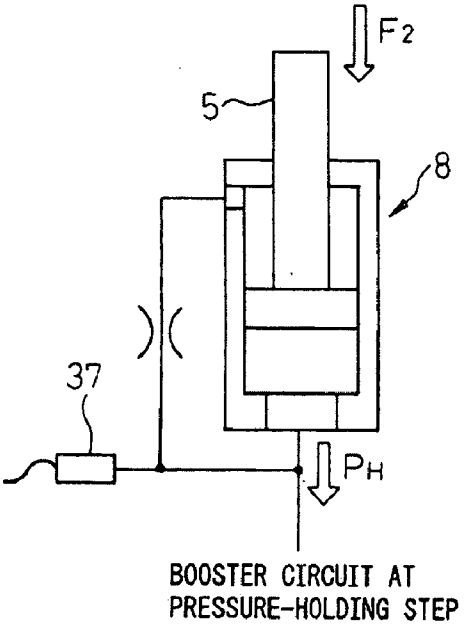
F2
5
8
37
PH
BOOSTER CIRCUIT AT
PRESSURE-HOLDING STEP

Fig.7

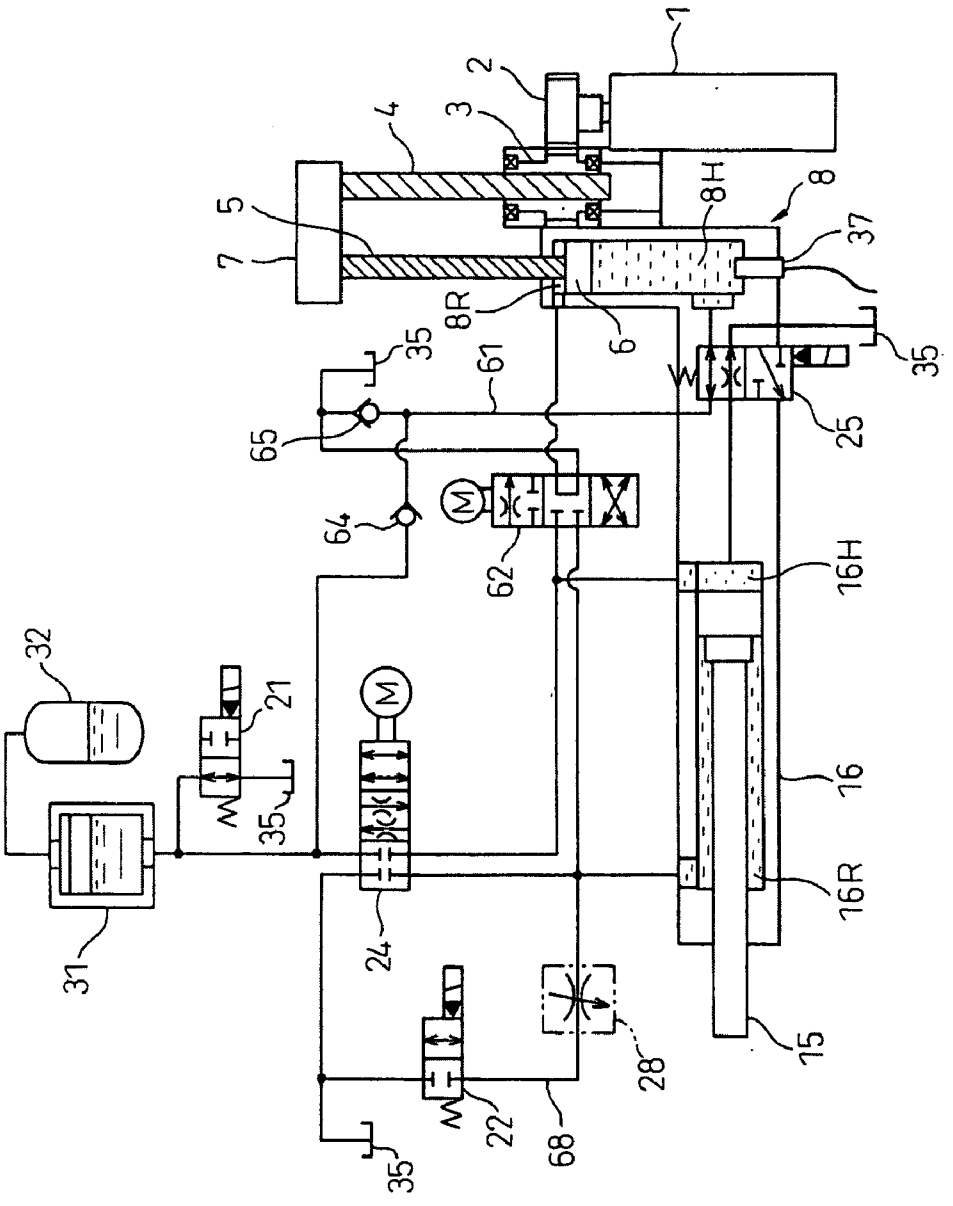
1
2
3
4
5
7
8
8H
8R
6
37
35
61
65
64
62
25
16H
16
16R
15
32
31
21
24
22
28
68

Fig.8a

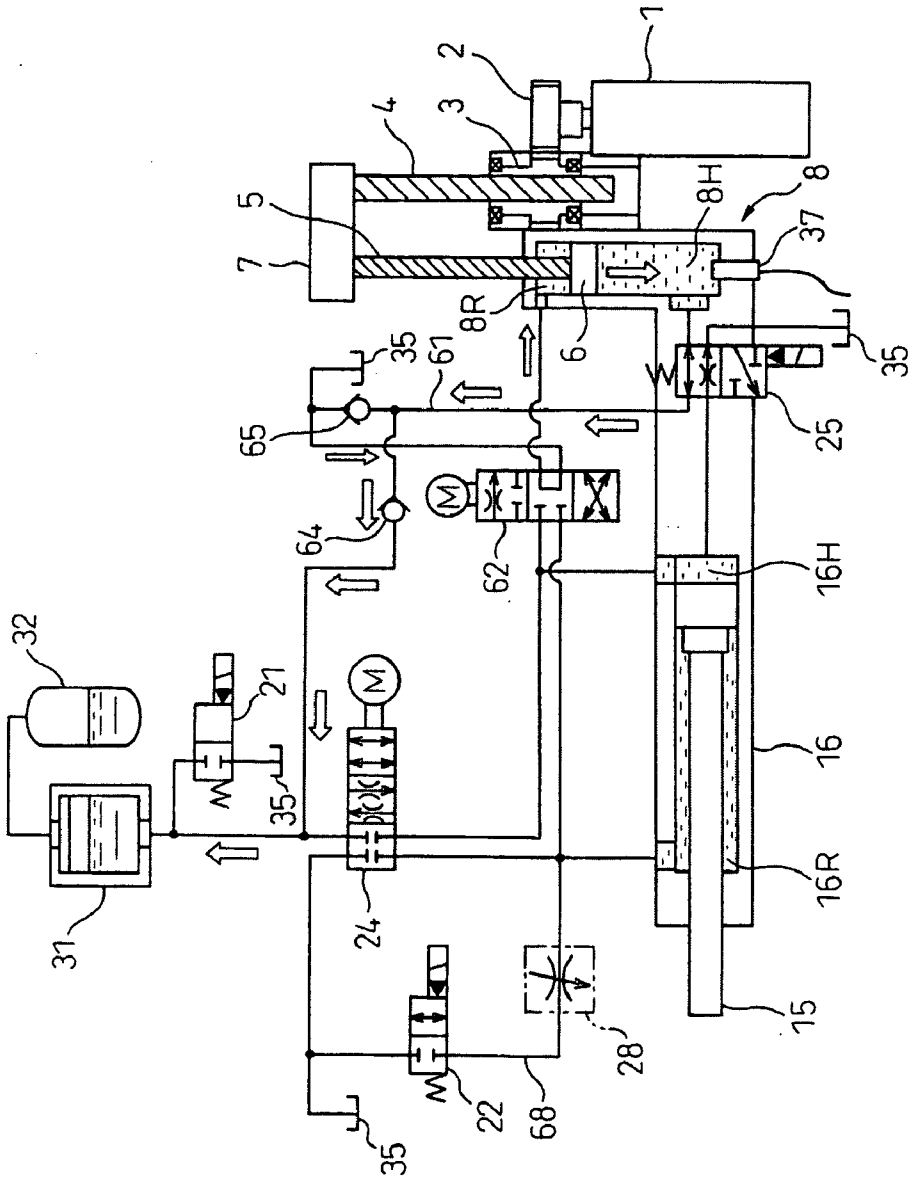
1
2
3
4
5
7
8
8H
8R
6
37
35
61
65
64
62
25
16H
16
16R
15
32
31
21
24
22
68
28

Fig.8b

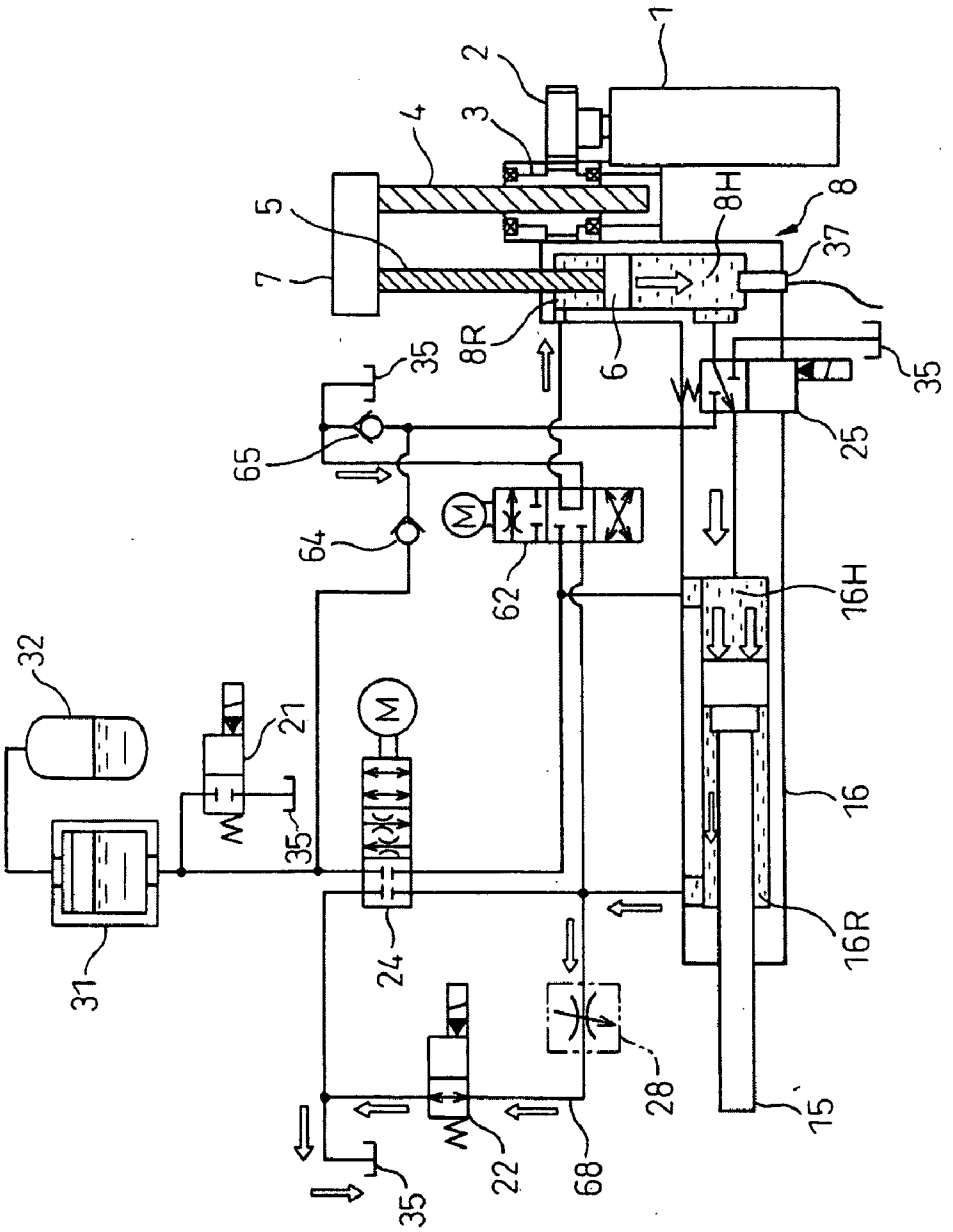

Fig. 8c

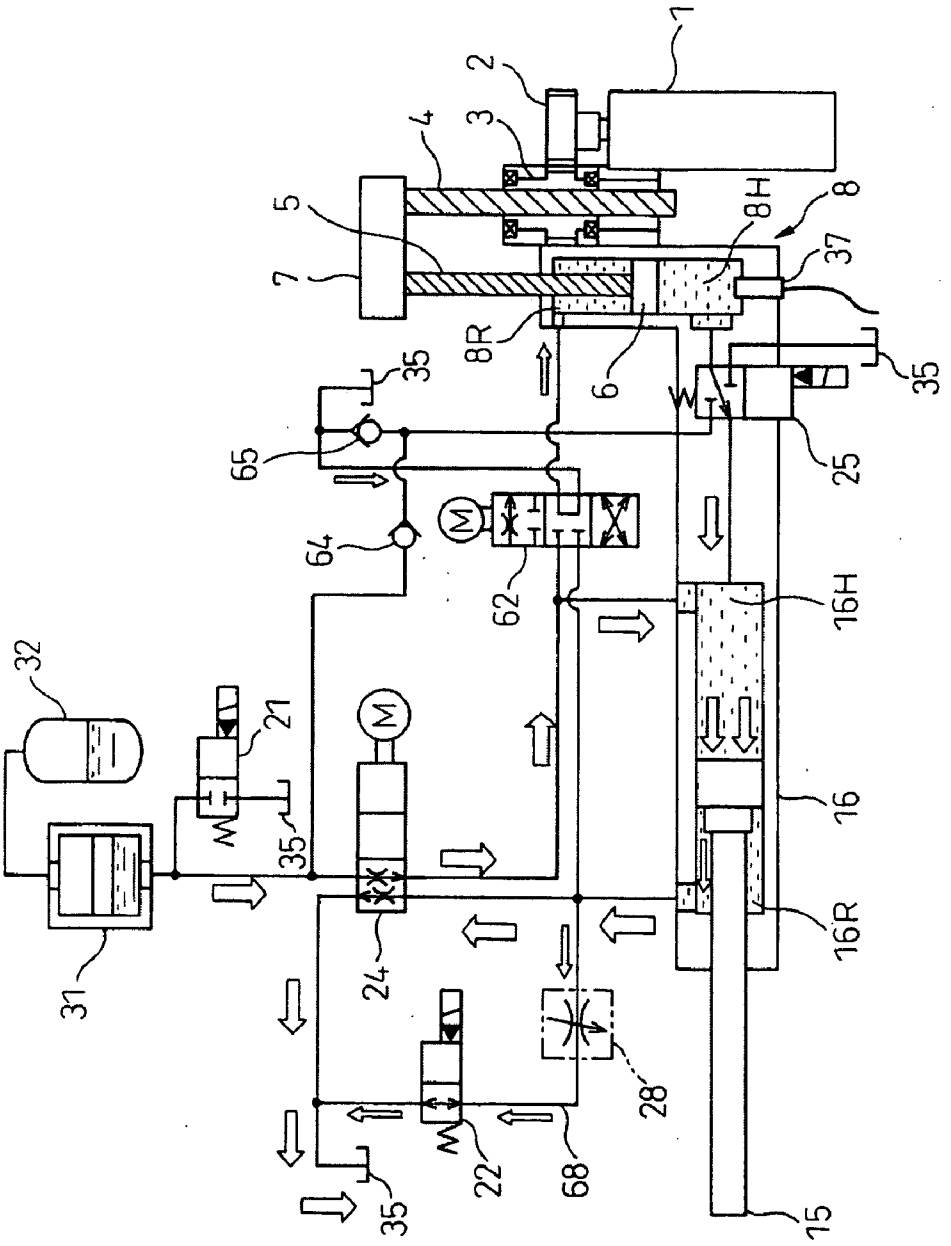

Fig.8d

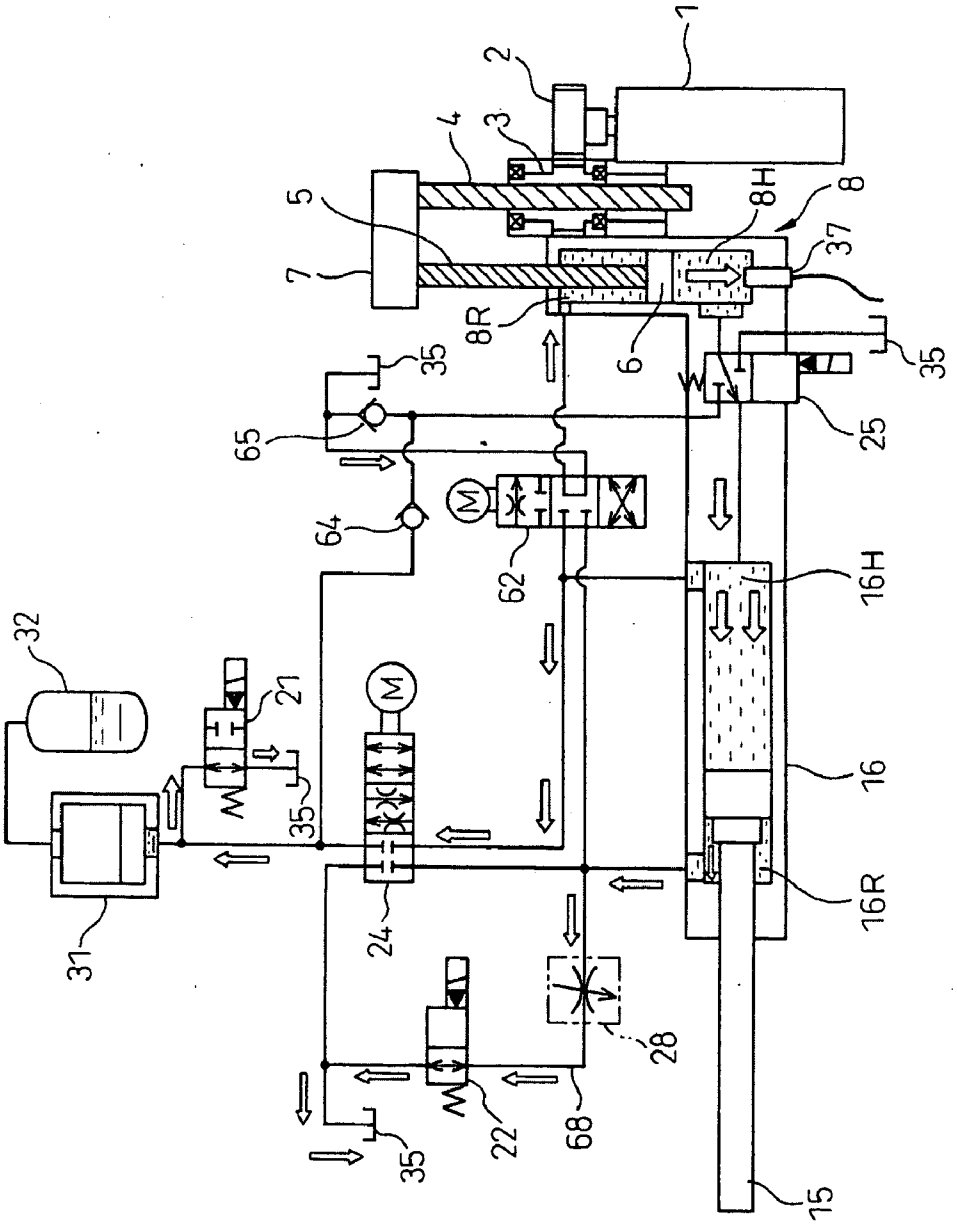

Fig.8e

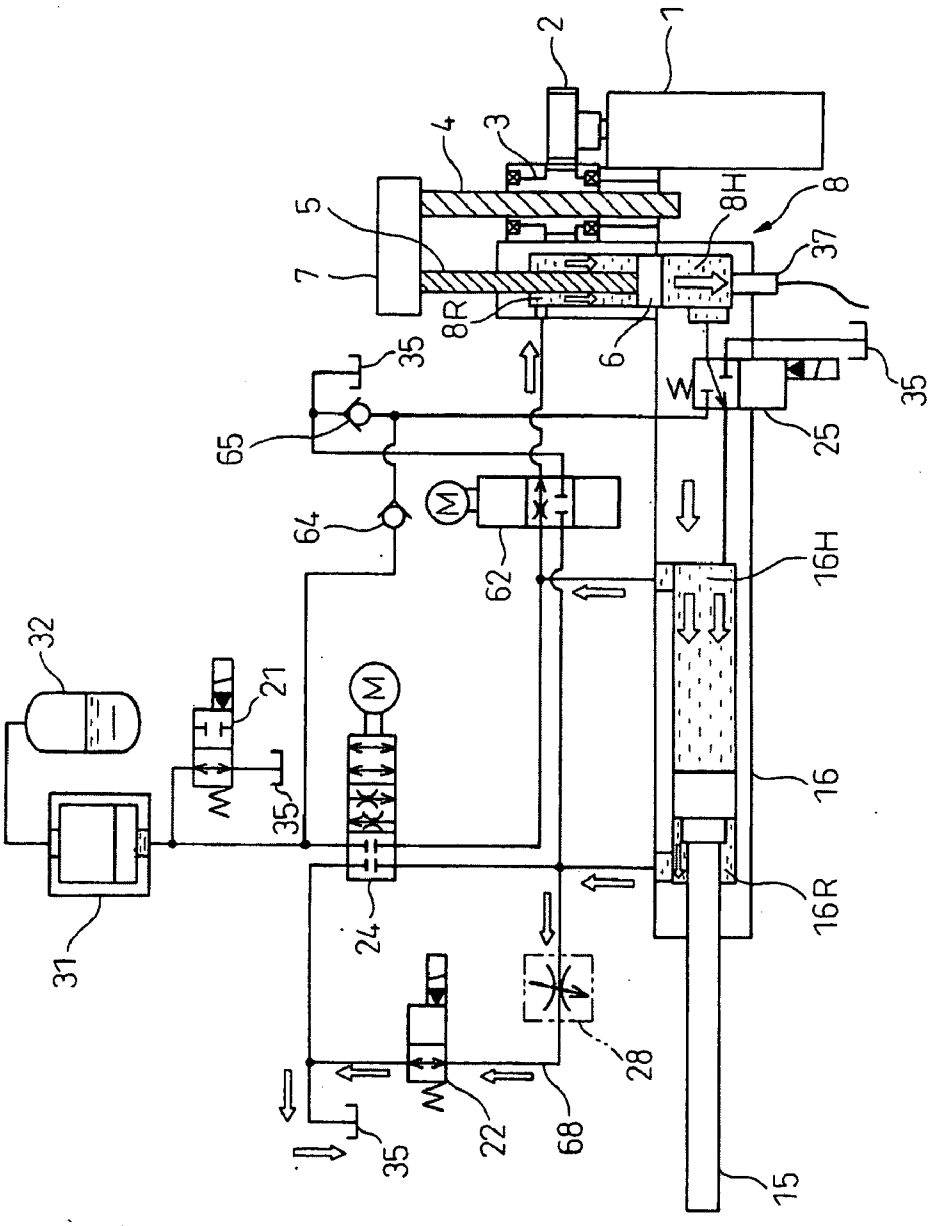

Fig. 8f

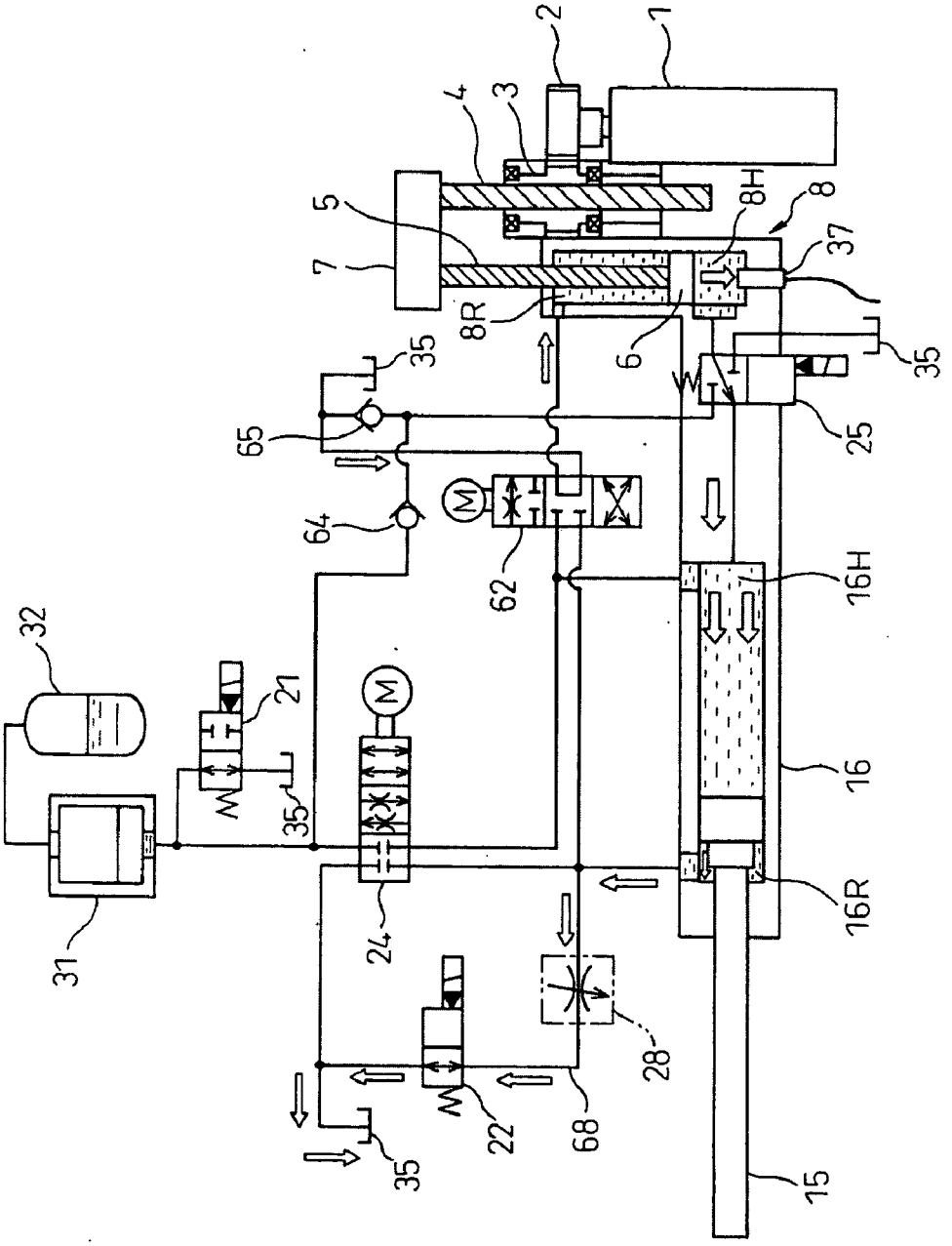

Fig. 8g

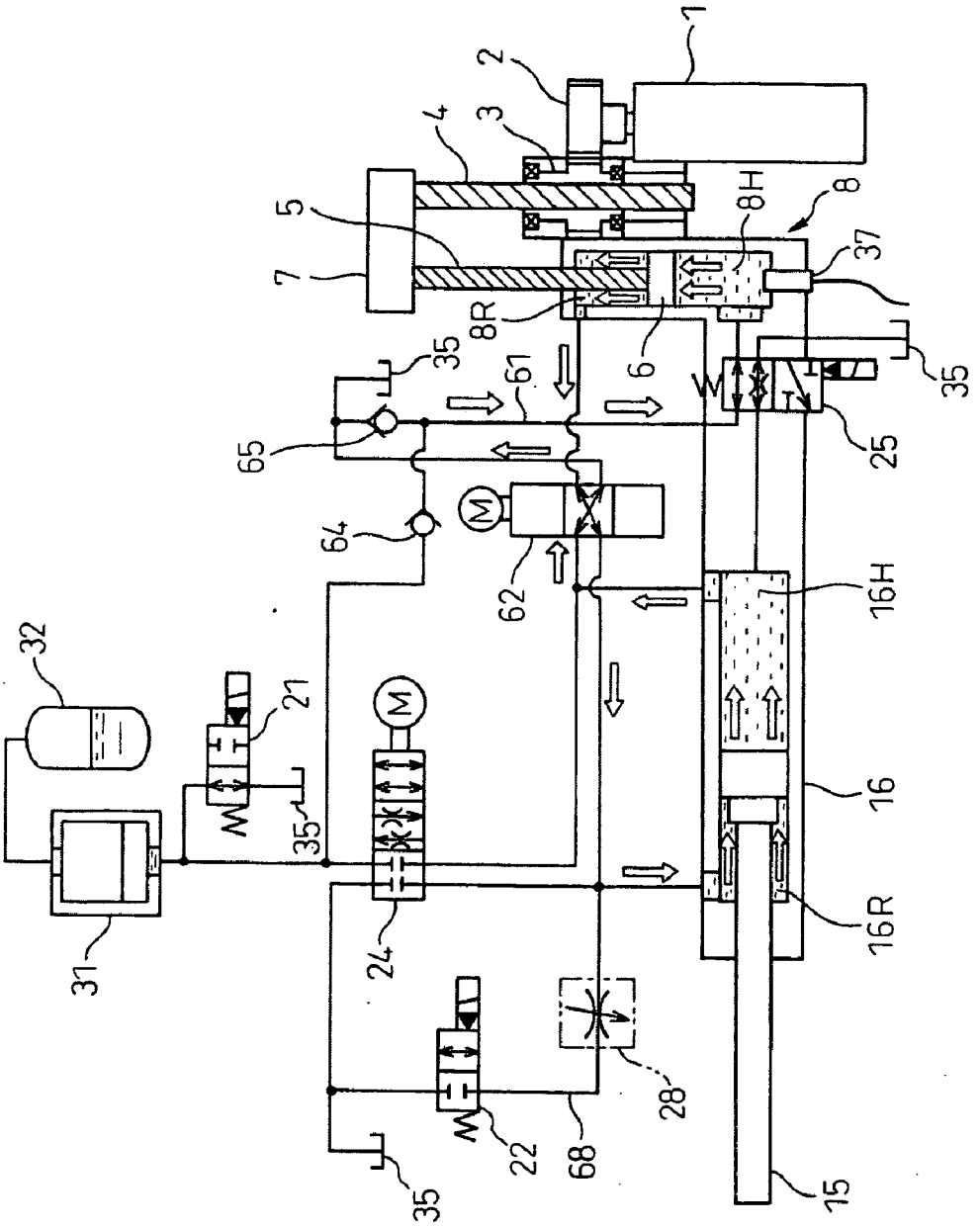
1
2
3
4
5
7
8
8H
8R
6
37
35
61
65
64
62
25
16H
16
16R
15
32
31
21
24
22
68
28

Fig.9

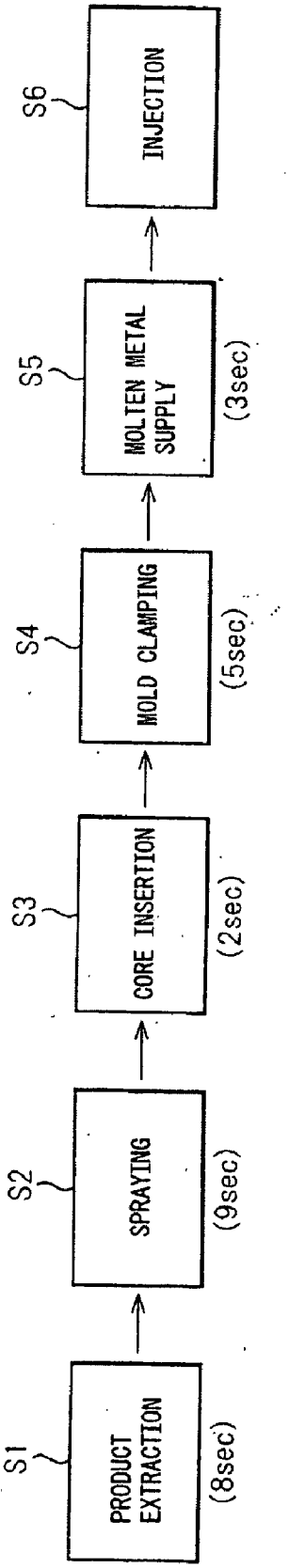
S1
PRODUCT EXTRACTION
(8sec)
S2
SPRAYING
(9sec)
S3
CORE INSERTION
(2sec)
S4
MOLD CLAMPING
(5sec)
S5
MOLTEN METAL SUPPLY
(3sec)
S6
INJECTION

Fig.10

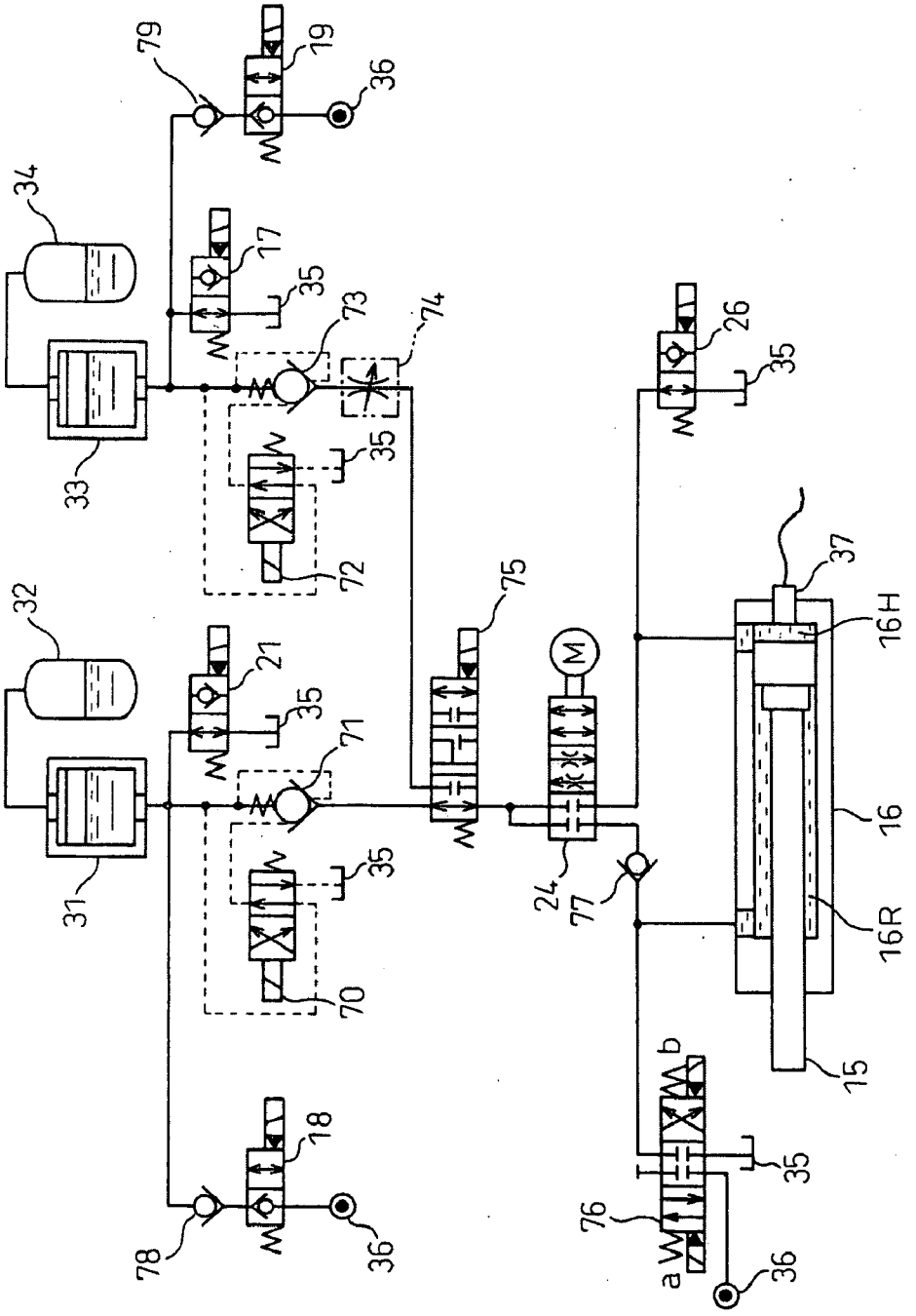
31
32
33
34
35
36
37
15
16
16H
16R
17
18
19
21
24
26
70
71
72
73
74
75
76
77
78
79
M
a
b

Fig.11

MODEL TYPE (MOLD CLAMPING FORCE) (ton)	TOTAL INJECTION STROKE L (mm)	ACC CHARGE TIME (sec)	SHORTEST MOLTEN METAL SUPPLY TIME (sec)
375	480	0.672	3.0
530	580	0.812	3.0
670	670	0.938	4.0
850	750	1.050	4.0
1000	820	1.148	4.0
1250	950	1.330	4.0
1650	1000	1.400	5.0
2000	1120	1.568	5.0
2250	1120	1.568	6.0
2500	1120	1.568	6.0
3550	1250	1.750	8.0
4000	1250	1.750	8.0

Fig.12

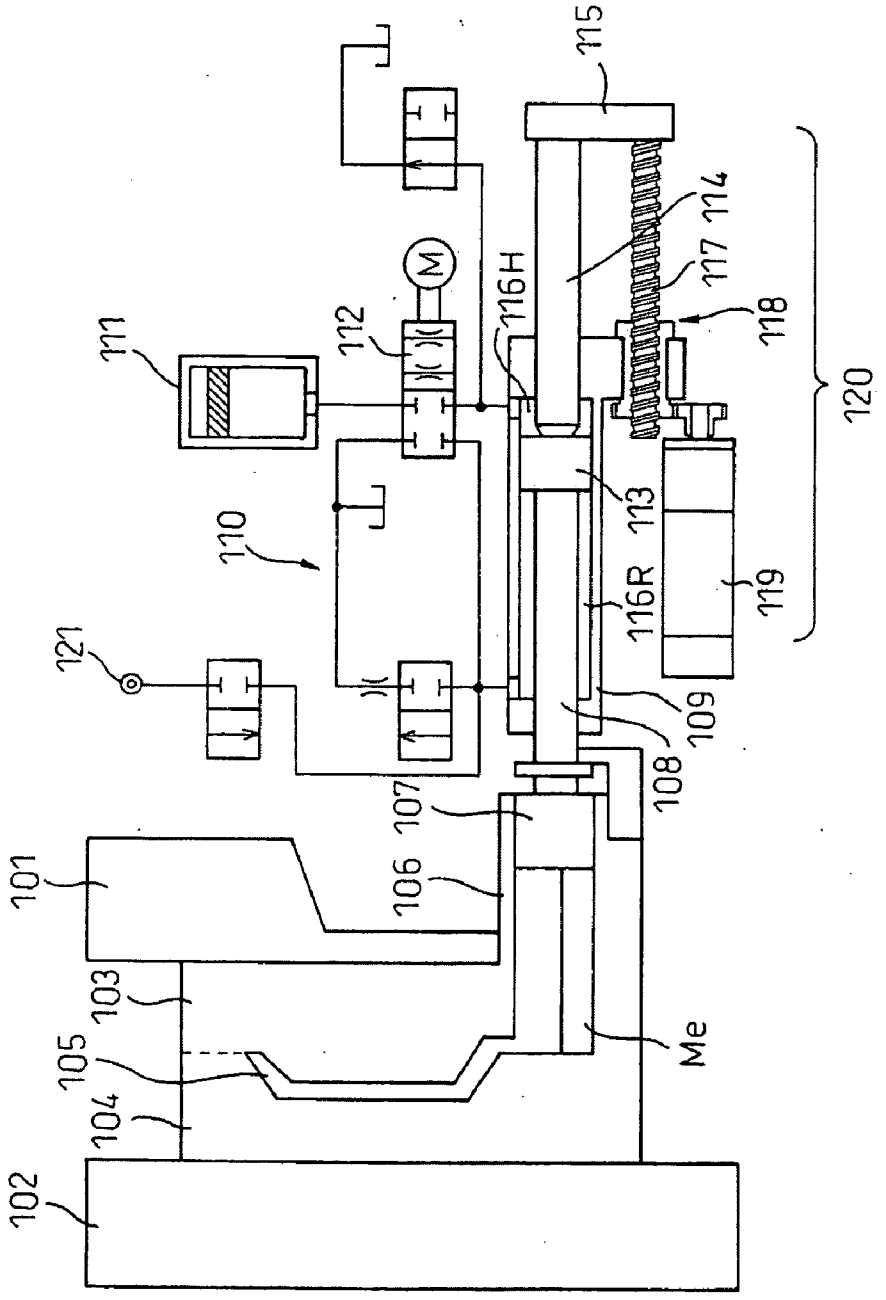
115
114
117
118
120
M
112
116H
111
110
113
116R
119
121
109
108
107
106
101
103
105
104
Me
102

Fig.13

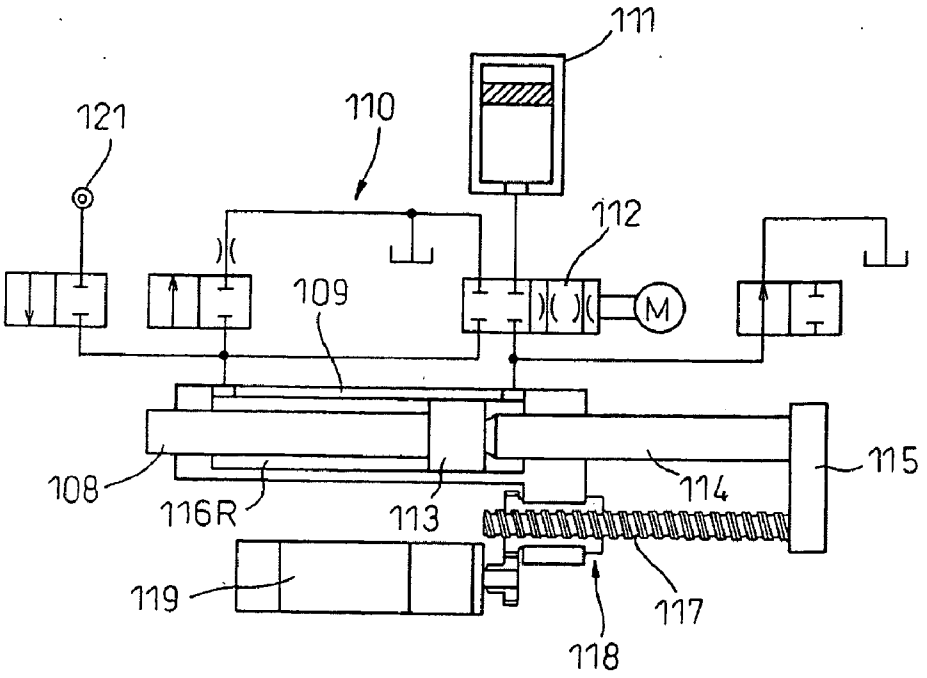
111
121
110
112
109
M
108
116R
113
114
115
119
117
118

Fig.14

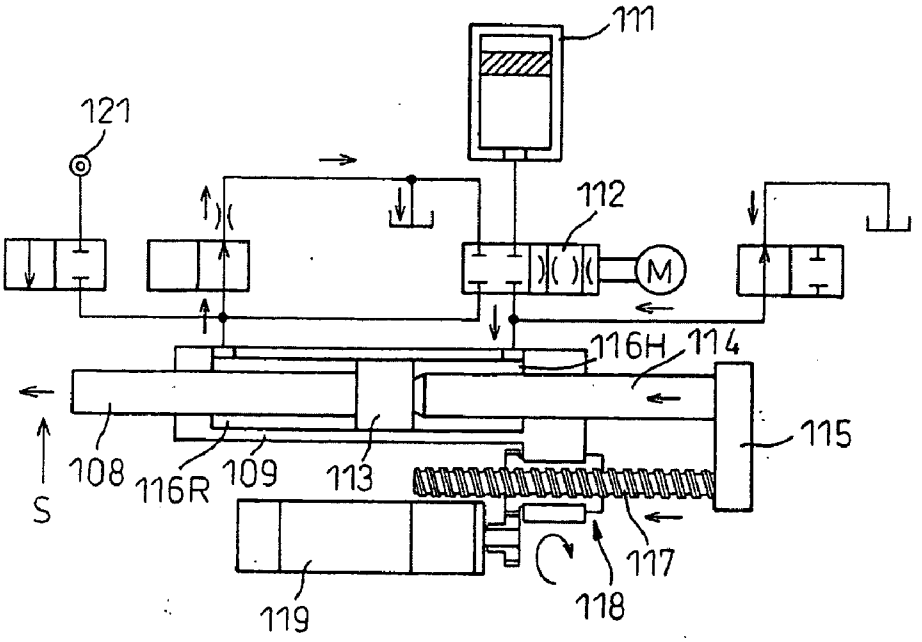
111
121
112
M
116H
114
115
S
108
116R
109
113
117
119
118

Fig.15

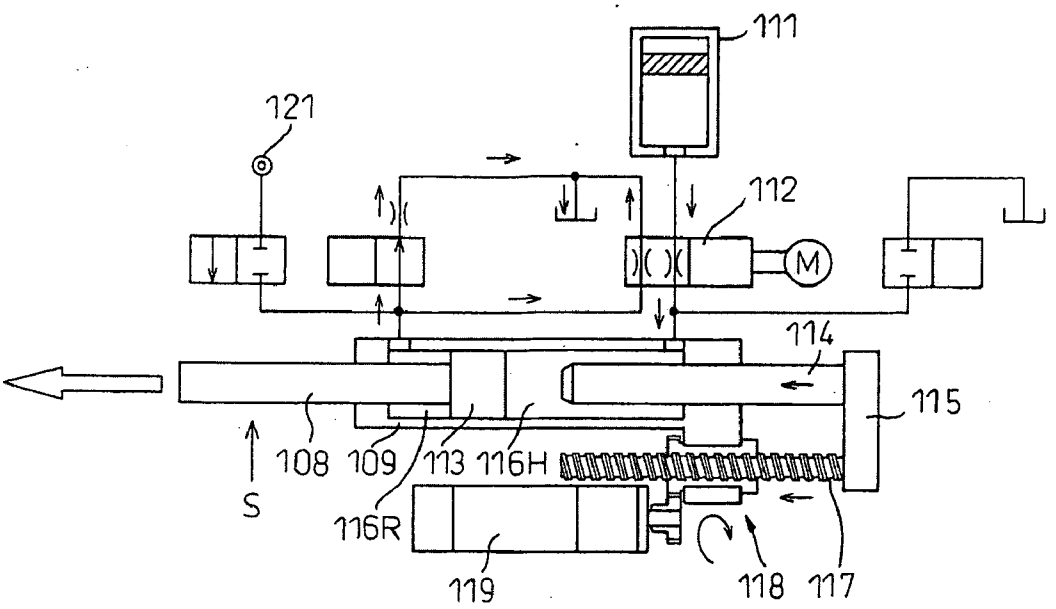
111
121
112
M
114
115
108
109
113
116H
S
116R
119
118
117

Fig.16

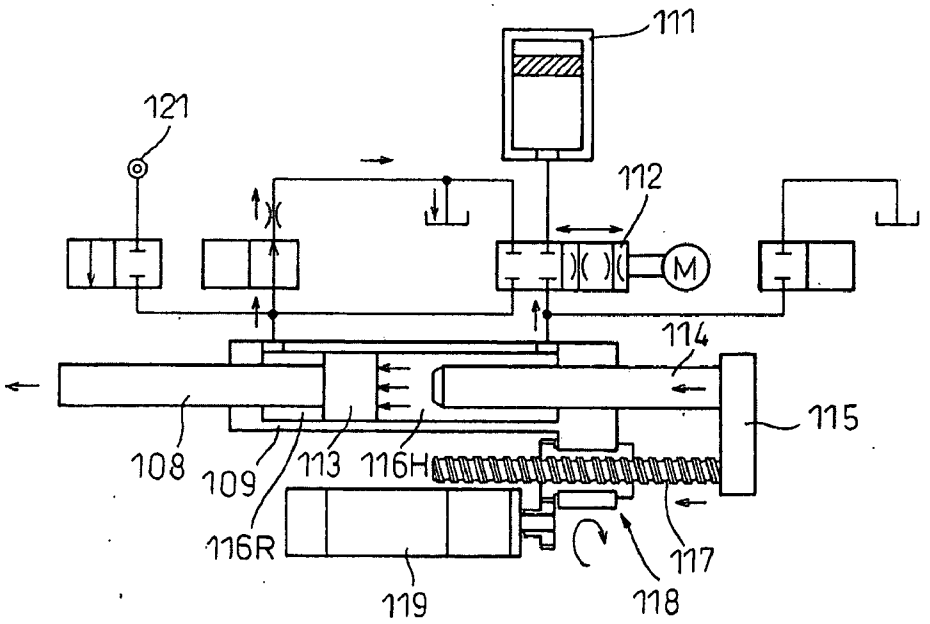
111
121
112
M
114
115
108
109
113
116H
116R
119
118
117

Fig.17

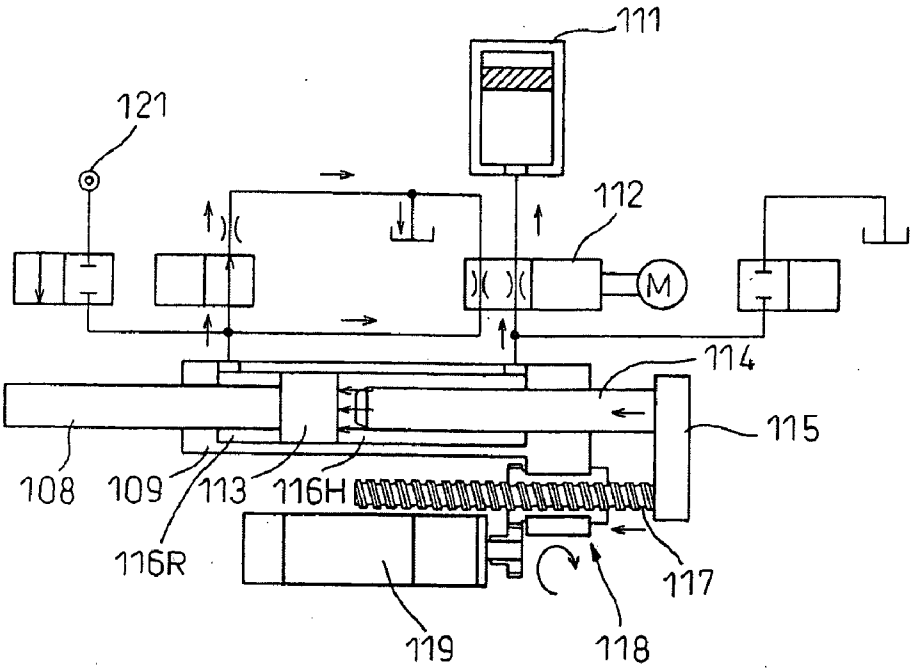
111
121
112
M
114
115
108
109
113
116H
116R
117
119
118

Fig.18

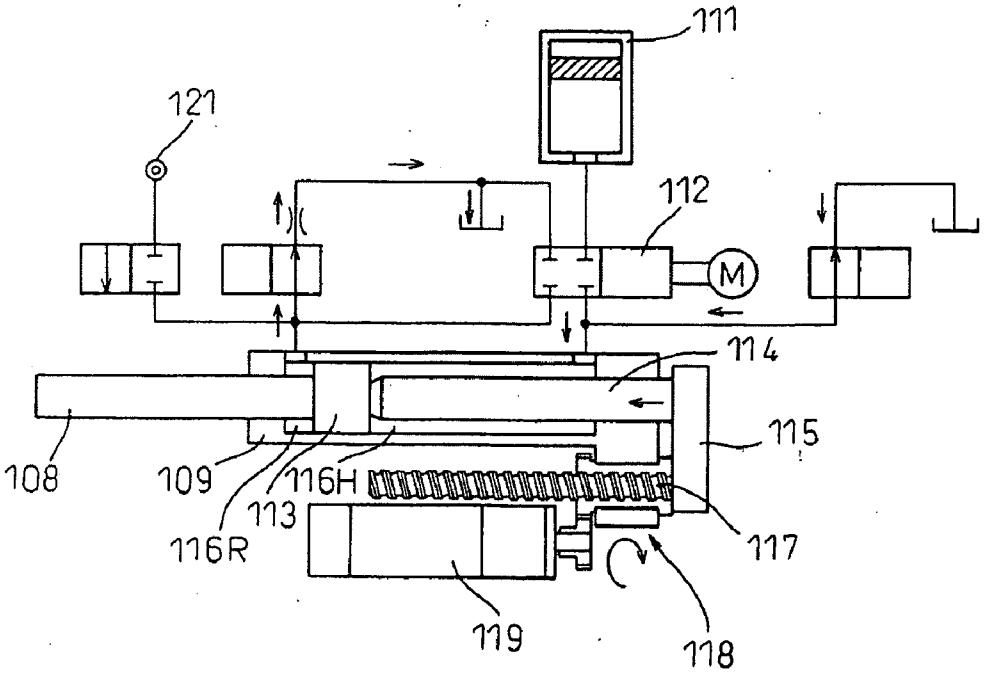
111
121
112
M
114
115
108
109
116H
113
116R
117
119
118

Fig.19

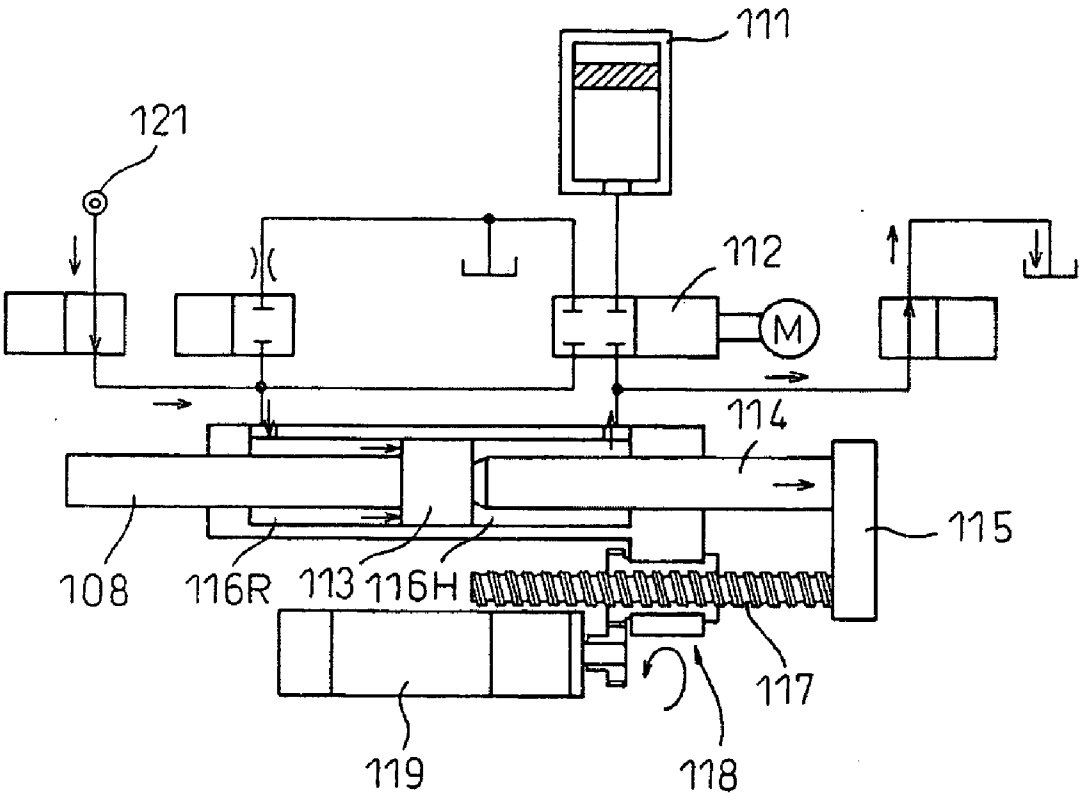

Fig.20

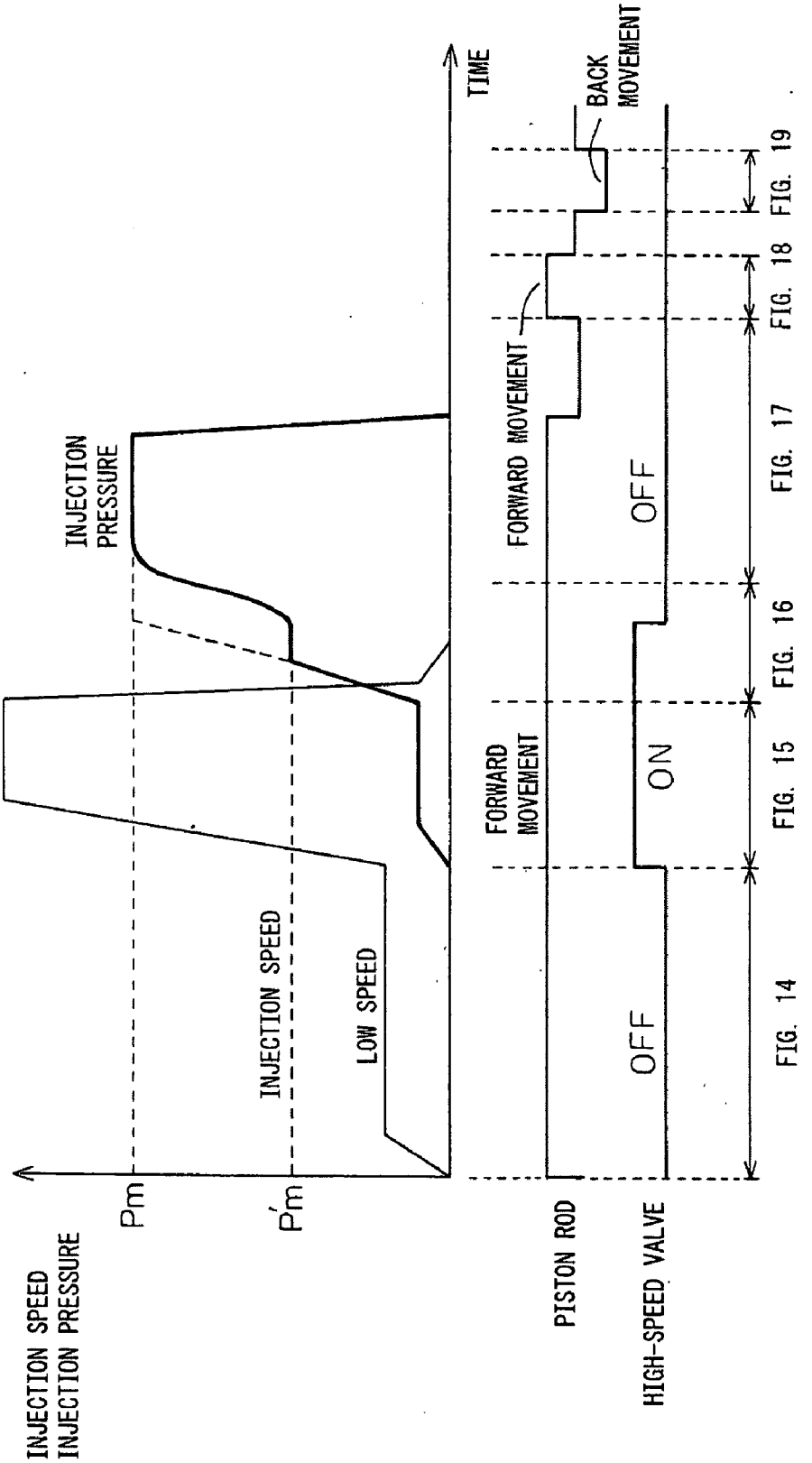
INJECTION SPEED
INJECTION PRESSURE
Pm
P'm
INJECTION PRESSURE
HIGH SPEED
INJECTION SPEED
LOW SPEED
TIME
FORWARD MOVEMENT
BACK MOVEMENT
FORWARD MOVEMENT
OFF
ON
OFF
PISTON ROD
HIGH-SPEED VALVE
FIG. 14
FIG. 15
FIG. 16
FIG. 17
FIG. 18
FIG. 19

Fig. 21

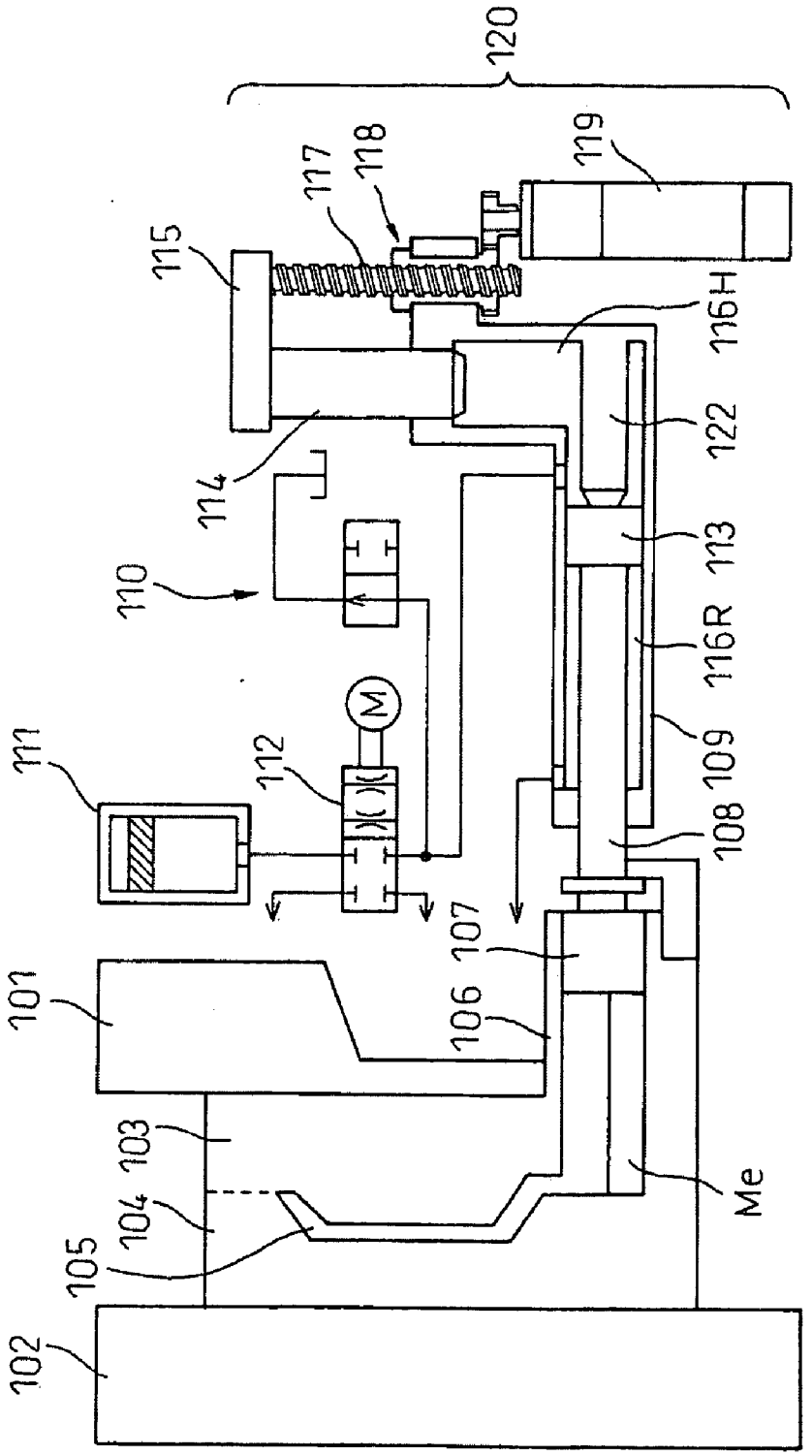
120
119
118
117
115
116H
122
114
113
110
116R
M
109
111
112
108
107
101
106
103
104
Me
105
102

Fig. 22

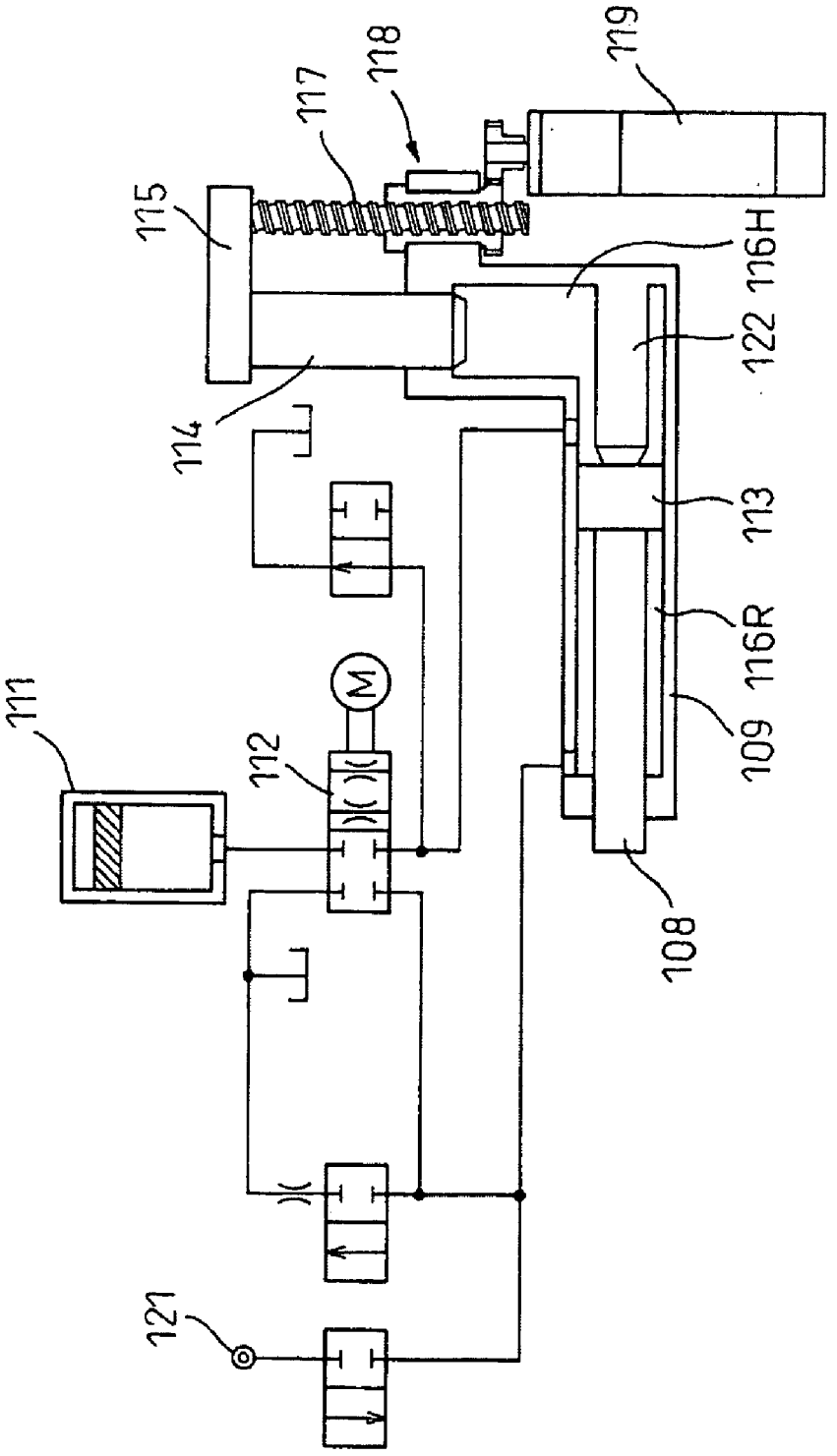

Fig.23

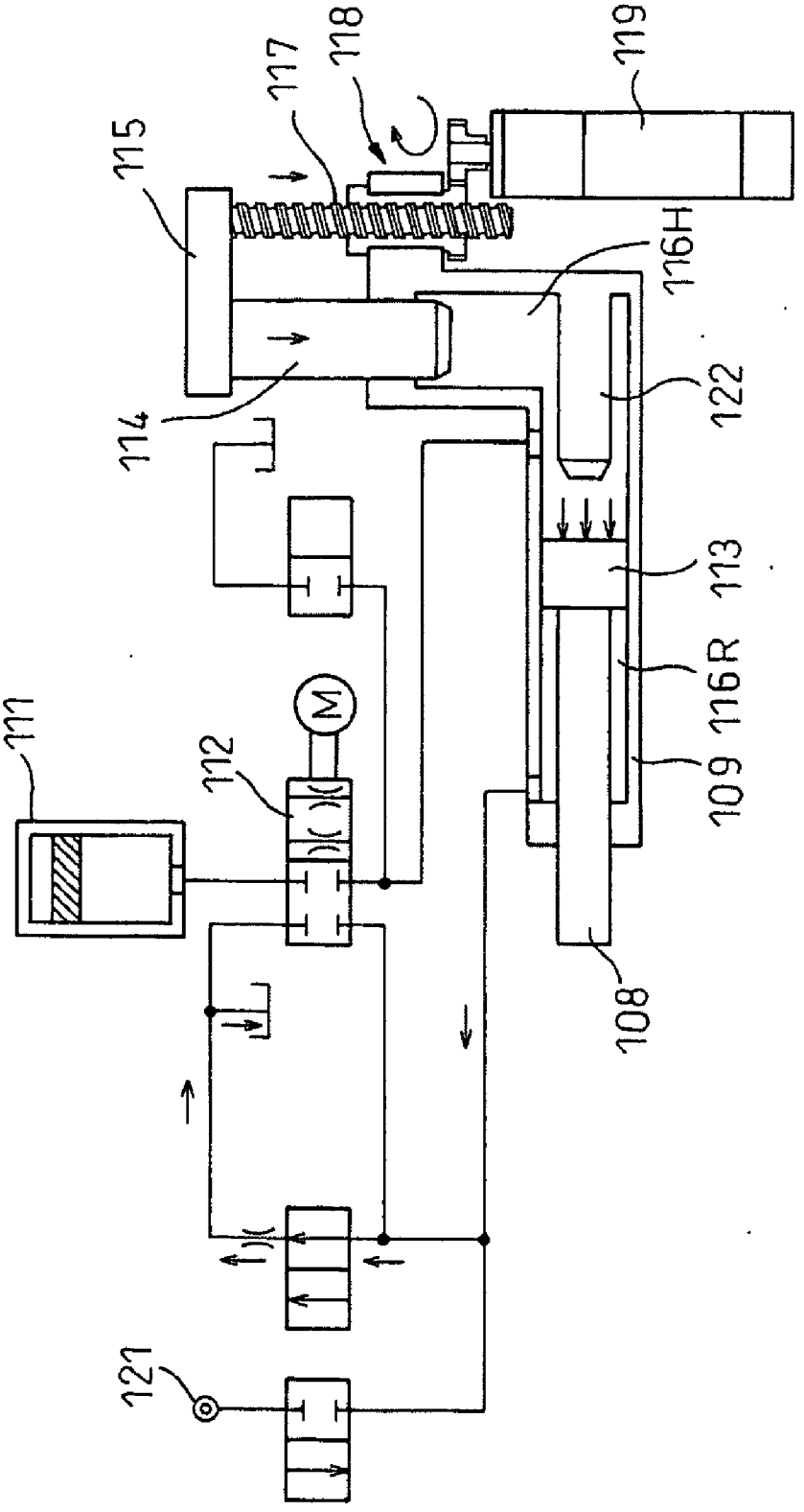

Fig. 24

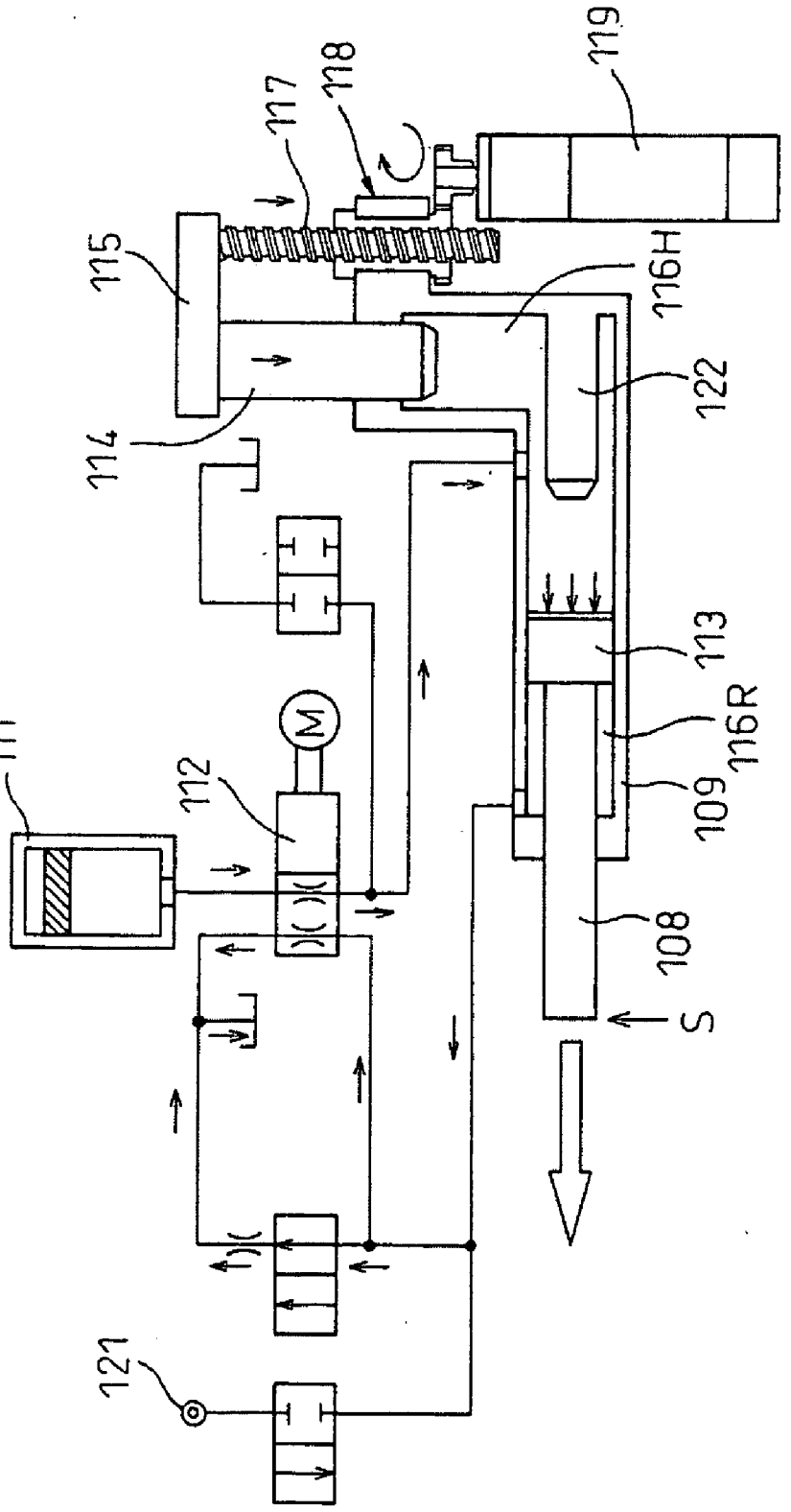

Fig.25

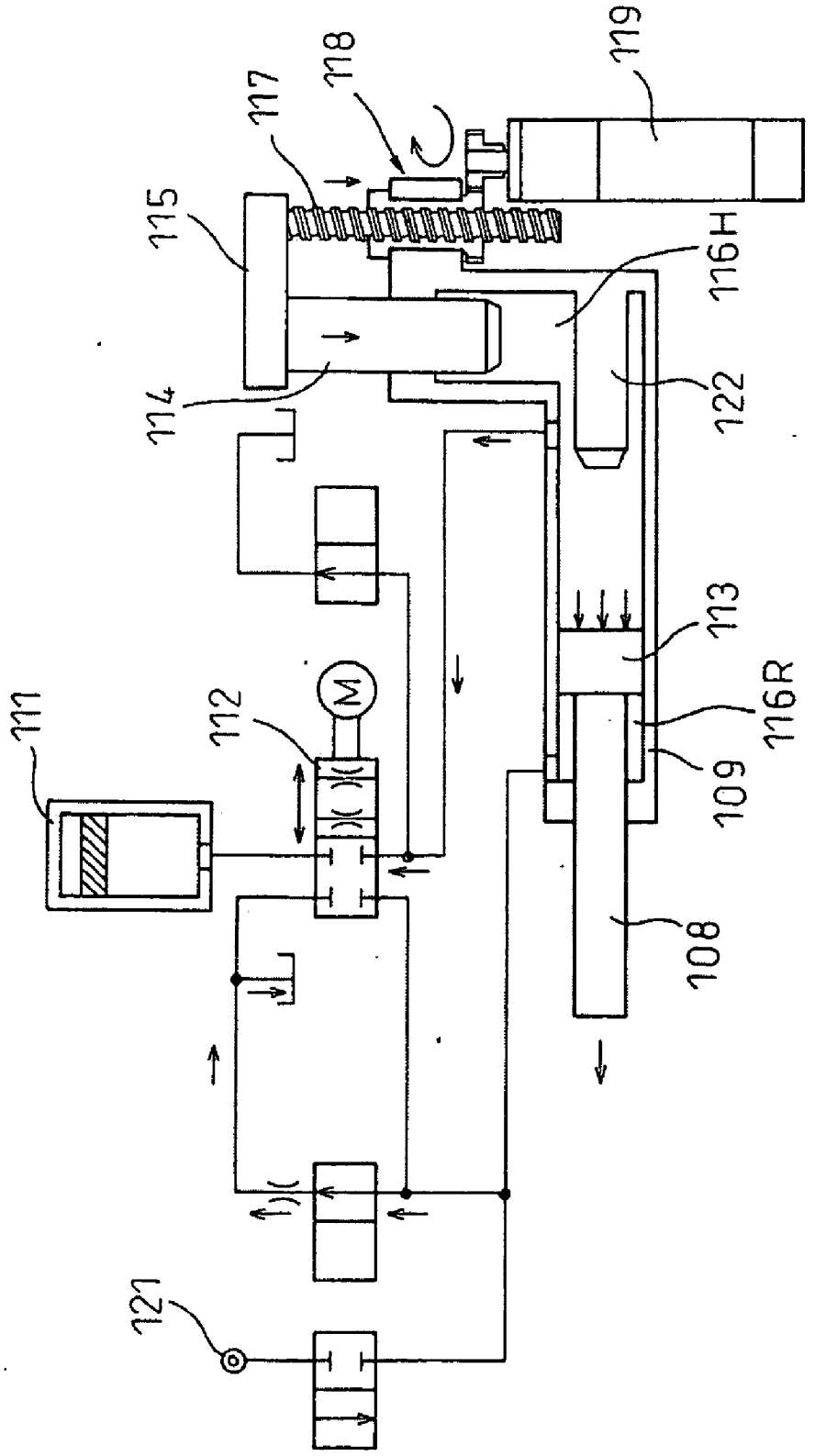

Fig.26

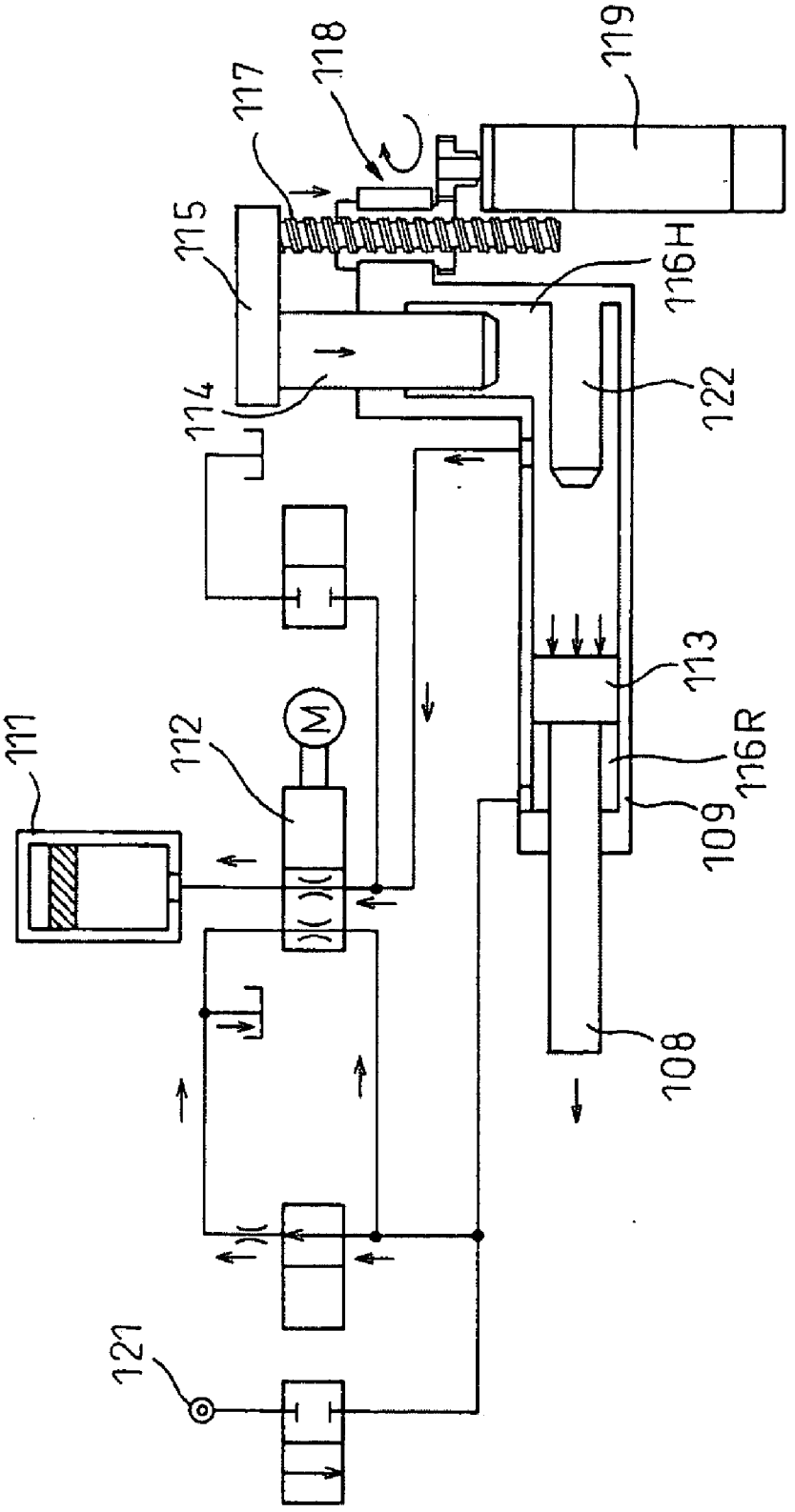

Fig. 27

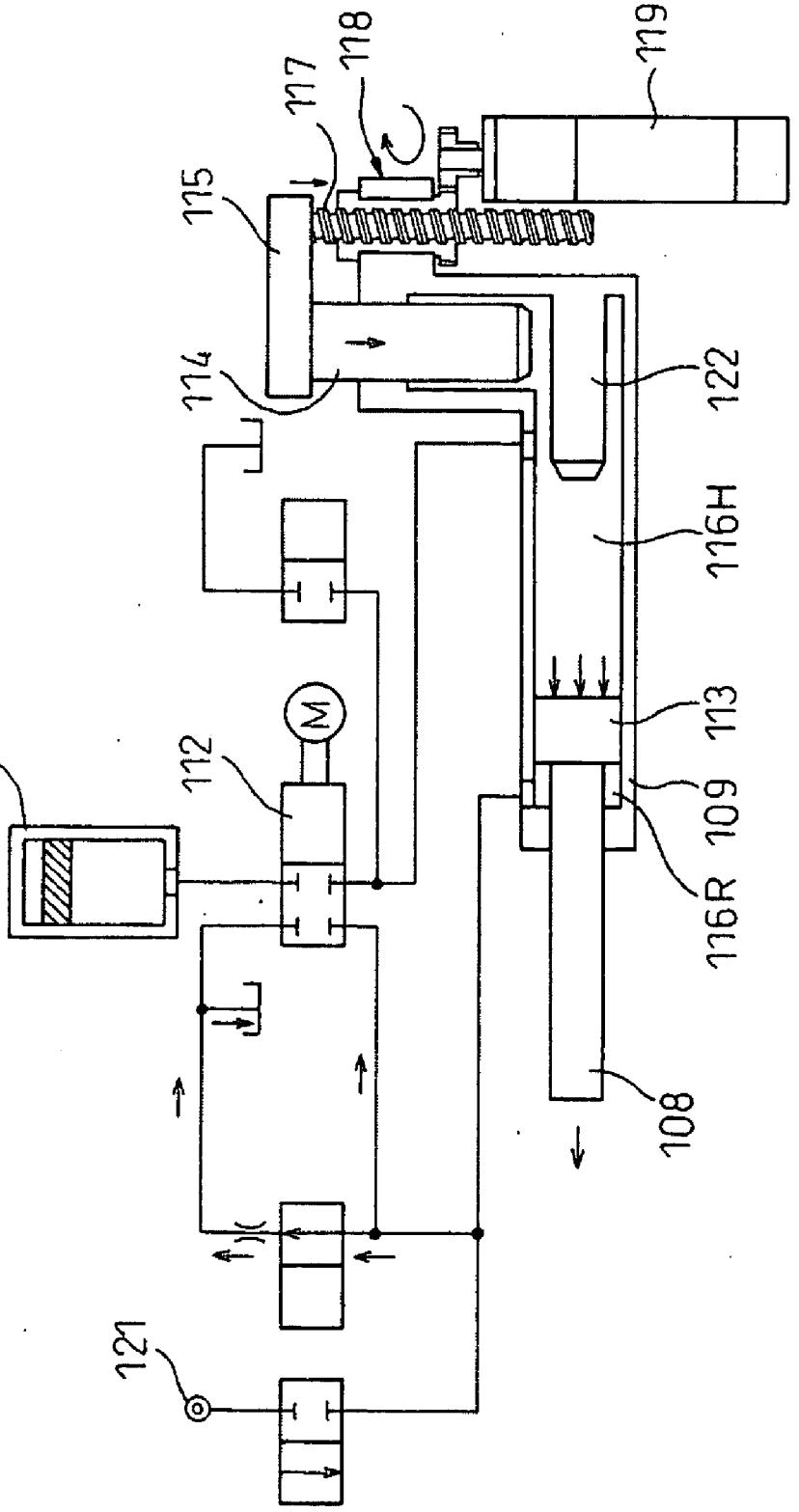

Fig.28

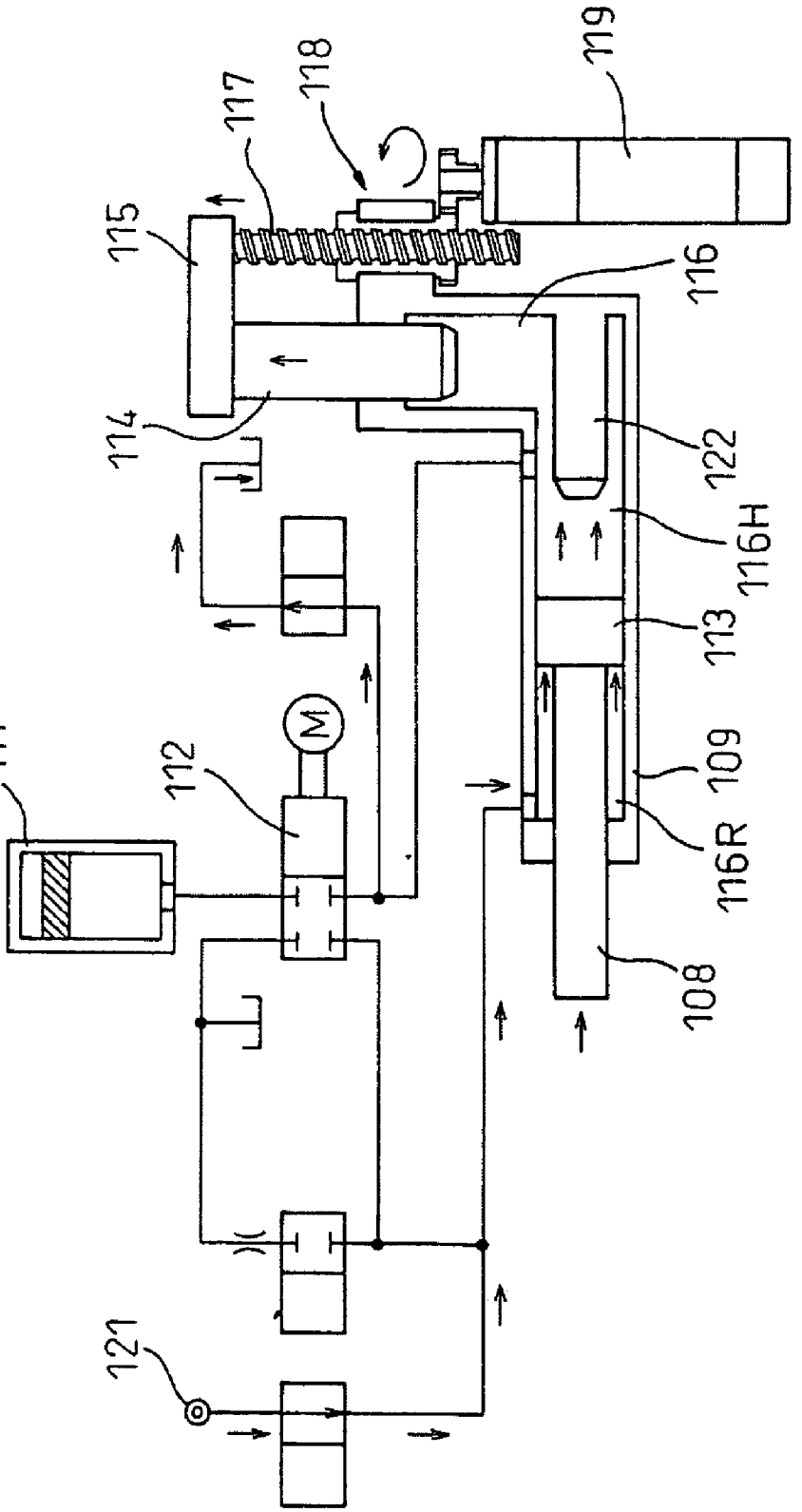

Fig.29

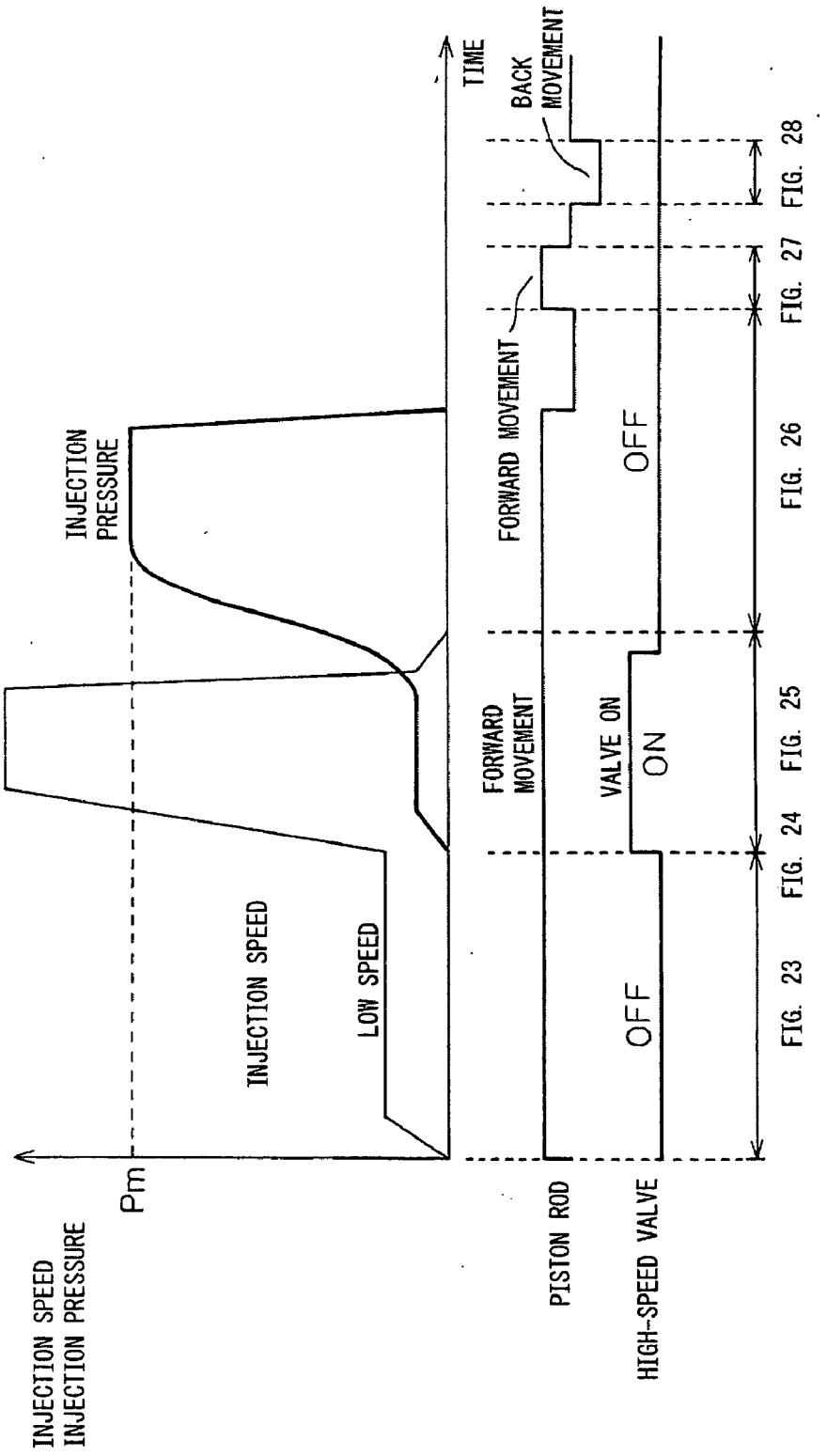
INJECTION SPEED
INJECTION PRESSURE
Pm
HIGH SPEED
INJECTION SPEED
LOW SPEED
INJECTION PRESSURE
TIME
FORWARD MOVEMENT
BACK MOVEMENT
PISTON ROD
FORWARD MOVEMENT
OFF
HIGH-SPEED VALVE
VALVE ON
ON
OFF
FIG. 23
FIG. 24
FIG. 25
FIG. 26
FIG. 27
FIG. 28

INJECTION DEVICE FOR DIE CASTING MACHINE

CROSS-REFERENCE TO RELATED APPLICATIONS

[0001] The present invention claims patent based on the priority of Japanese Patent Application No. 2006-25402 filed on Sep. 20, 2006, Japanese Patent Application No. 2006-324000 filed on Nov. 30, 2006, and Japanese Patent Application No. 2007-143347 filed on May 30, 2007 and these contents are incorporated herein as reference and continued in the subject application.

BACKGROUND OF THE INVENTION

[0002] 1. Field of the Invention

[0003] The present invention relates to an injection system of a die casting machine, etc., and more particularly, to a hybrid injection system.

[0004] 2. Description of the Related Art

[0005] In a die cast molding of aluminum alloy, etc., a hydraulic die casting machine in which an injection piston (plunger) is driven by a hydraulic cylinder is used conventionally. In such a die casting machine of this type, the speed and pressure of the injection piston are controlled by controlling the pressure and flow rate of hydraulic oil to be supplied to the hydraulic cylinder that drives the injection piston.

[0006] In such die cast molding, it is important to stably maintain the speed of an injection piston (plunger) in order to improve the quality of a molded product; however, when the speed of an injection piston that is driven using a hydraulic cylinder is controlled, the flow rate of the hydraulic oil to be supplied to the hydraulic cylinder is controlled by the adjustment of a hydraulic control valve, and therefore the responsivity is low and maintaining a stable speed of the injection piston is difficult.

[0007] Further, when the speed of an injection piston that is driven using a hydraulic cylinder is controlled, it is difficult to detect a load imposed on the injection piston, and to perform feedback control, and therefore it is also difficult to maintain a stable speed of the injection piston.

[0008] Furthermore, when hydraulic pressure is used as a drive source of an injection piston, the energy efficiency is low and environmental contamination due to the leak of hydraulic oil, the disposing process of wasted hydraulic oil, etc., are involved and the working environment is reduced.

[0009] Because of this, in order to alleviate the above-mentioned problems, there has been proposed an injection system in which a ball screw mechanism driven by an electric servo motor and a hydraulic cylinder operated by a hydraulic pump and the hydraulic pressure of an accumulator are linked in series to an injection piston (plunger) (for example, refer to patent documents 1 to 3). This type of an injection machine for a die casting machine, in which hydraulic drive and electric drive are combined as described above, is referred to as a hybrid-type. A hybrid-type injection system makes it possible to electrically control the speed of an injection piston, etc., in an injection process that requires stable and precision control.

[0010] As an injection machine of a die casting machine, a hybrid type injection system is devised; however, if this system is of type in which a pressure-increasing step for increasing pressure of molten metal for injection pressure and a pressure-holding step for holding pressure of molten metal after the pressure-increasing step are performed electrically, it is necessary to maintain a large current flowing continuously in order to maintain the motor at the highest torque at the pressure-holding step, and therefore, there arises a problem that a large electrical loss occurs and the motor has to be increased in size. The above-described problems arise at the pressure-increasing step and the pressure-holding step and their contents are explained below. FIG. **3** shows the change of the injection speed (V) of an injection piston (plunger) and the cylinder head pressure (P_H) with respect to the injection time (or injection stroke) (referred to as injection characteristic diagram) in the operation (injection) process of a die casting machine. From FIG. **3**, it is known how much injection piston drive power is necessary in the injection process.

[0011] First, at the pressure-increasing step (process), in order to reduce the number of cavities (gas holes or blow holes) in a molded product, performance is required that a pressure-increasing time At shown in the injection characteristic diagram in FIG. **3** be 10 msec or less. In a process for pushing AL (aluminum) into an unfilled portion in the mold, the injection piston is moved forward a few millimeters in order to compress the hydraulic liquid in the hydraulic cylinder, and at this time it is necessary to supply a large amount of hydraulic oil in order to complete the forward movement in 10 msec (for example, in the case of a 500-ton machine, a flow rate of about 500 L/min is required). In the case of an electric booster in which the injection process is performed electrically, it is necessary to move forward a booster (piston) rod with a large diameter at a high speed and at this time, the maximum rotation speed and torque are required. However, at the pressure-holding step (process), it is necessary to maintain pressure for a pressure-holding time TH (about five to ten sec) in correspondence with the solidification/contraction of molten AL (aluminum) and during this period, a high torque is required and a large current flows, and therefore, a power loss occurs and there is a possibility that for example, a motor trip may occur.

[0012] Further, in a conventional injection system (refer to patent documents 1 to 3), there is no way to prevent the control circuit and the control method from becoming complicated. In addition, such complication does not necessarily lead directly to the increase in the speed of the injection piston (plunger) and stabilization.

[0013] In the above-mentioned injection system, the electric servo motor is used to improve the controllability of the injection speed at the time of high-speed injection and the hydraulic cylinder is used to drive the injection cylinder in order to obtain a sufficiently large pressure-intensifying/pressure-holding forces at the pressure-intensifying/pressure-holding steps. In this drive mechanism, the thrust of the hydraulic cylinder is transmitted to the injection plunger via the spindle of the ball screw, and therefore, it is necessary to increase the diameter of the spindle of the ball screw to a certain level from the standpoint of preservation of mechanical strength. However, the increase in the diameter will impede the increase in the injection plunger speed and the stabilization.

[0014] In addition, while moving forward the injection plunger by the electric servo motor, it is necessary to supply hydraulic oil to the hydraulic cylinder as the plunger moves forward; however, a hydraulic circuit to supply hydraulic oil as the plunger moves forward becomes complicated and at the same time, the control itself also becomes difficult.

[0015] Further, when the intensifying/holding injection pressure by hydraulic pressure, it is necessary to cancel the

feedback control by the rotation speed of the electric servo motor, generate a torque in the direction of forward movement of the injection plunger at all times, and control so that the control torque of the electric servo motor does not serve as a reaction force against the hydraulic cylinder, and therefore, there is no way to prevent the entire circuit configuration, including the hydraulic circuit, from becoming complicated.

[0016] In the above-mentioned injection system (refer to patent documents 1 to 3), it is unavoidable that the control circuit and the control method become complicated. In addition, this complication does not necessarily lead directly to the increase in the speed of the injection plunger and the stabilization.

[0017] Because of this, in order to alleviate the above-mentioned problems, there has been proposed an injection system in which a ball screw mechanism driven by an electric servo motor and a hydraulic cylinder operated by a hydraulic pump and the hydraulic pressure of an accumulator are linked in parallel to an injection plunger to drive the injection plunger (refer to patent document 4).

[0018] In the above-mentioned injection system, the thrust of the hydraulic cylinder is transmitted directly to the injection plunger, not via a ball screw, and therefore, it is not necessary to increase the diameter of the spindle of the ball screw and in this point, the controllability is improved.

[0019] However, while moving the injection plunger forward by the electric servo motor, it is necessary to supply hydraulic oil to the hydraulic cylinder as the plunger moves forward and when intensifying/holding the injection pressure by hydraulic pressure, it is necessary to cancel the feedback control by the rotation speed of the electric servo motor, generate a torque in the direction of forward movement of the injection plunger at all times, and control so that the control torque of the electric servo motor does not serve as a reaction force against the hydraulic cylinder are the same as those in the case of the injection system disclosed in patent document 1 to 3, and after all, there is no way to prevent the control circuit and the control method from becoming complicated.

[0020] Further, the injection system described in patent document 4 comprises a hydraulic tank and a hydraulic pump, and therefore, the device becomes large in size, maintainability is deteriorated, and the working environment is reduced.

[0021] Incidentally, in recent years, manufacturing a molded product having a complicated shape at a high speed, with high quality, and with high yield in the die cast molding has been demanded. As a method to meet this demand, a large-sized, high-output motor which is used to drive an injection plunger has been conceived of.

[0022] However, a large-sized motor has, in general, poor responsivity and the timing to switch the injection plunger from low-speed to high-speed is delayed, and therefore, it becomes difficult to maintain the quality of molded products.

[0023] Further, if a large-sized motor is used in a die casting machine of 350-ton class, a large-sized motor having an instant output of 500 Kw is required and in addition, in order to increase the speed of the injection plunger, a feeding mechanism for a screw with a large pitch is required (for example, in order to obtain a high speed of 5 m/s at 2000 rpm, a screw with a pitch of 150 mm is necessary and even for 3 m/s, a screw with a pitch of 90 mm is necessary).

[0024] After all, a drive device that drives an injection plunger using a large-sized, high-output motor is unavoidable to have a large size and a large capacity, and therefore, its controllability is deteriorated, and if a large-scaled, large-capacity drive device is used, the inertia mass of molded product increases and burr becomes more likely to occur on a molded product, and therefore, it becomes difficult to maintain the quality of a molded product.

[0025] In the current circumstances where it is demanded to manufacture a molded product having a complicated shape and high quality at a high speed and with high yield in the die cast molding, a small-sized, light, energy-saving, high-speed injection system is required, which has a simple drive mechanism and excellent in controllability and further in maintainability.

[0026] Taking the above demand into consideration, the applicants of the present invention have proposed, in patent document 5, a hybrid injection system excellent in controllability characterized in that a hydraulic control mechanism to which a plunger is linked is provided with a back-and-forth movement control mechanism that drives the hydraulic control mechanism in the back-and-forth direction of the plunger.

[0027] According to the hybrid injection system proposed in patent document 5, it is possible to make the injection system itself smaller and lighter compared to a conventional one and at the same time, to control the switching/pressure intensification at a low-speed/high-speed switching position with excellent responsivity and high precision, and therefore, a high-quality molded product can be manufactured with high yield, however, there is a limit to the reduction in size and weight.

[0028] In FIG. **1**, a logic valve is provided actually at the exit of an accumulator (ACC), although not shown. The reason for this is explained below. In a die casting machine, before an injection process, it is necessary to supply pressurized hydraulic oil to the accumulator (ACC) until a specified pressure is reached and the supply time of hydraulic oil to ACC by a pump is, for example, eight seconds for a machine with a mold clamping force of 500 tons. When hydraulic oil is supplied to ACC is explained below with reference to FIG. **9**. In FIG. **9**, the outline of processes before injection starts is shown and the time required for each process is shown in brackets ( ).

[0029] In a product extraction procedure (S**1**), the product molded in the previous process is extracted. In a spray procedure (S**2**), mold release agent is applied to the inner surface of the mold by spraying. In a core insertion procedure (S**3**), the mold is moved in accordance with the shape of the product as the need arises. In a mold clamping procedure (S**4**), the fixed mold and the movable mold are engaged with each other. In a molten metal supply procedure (S**5**), molten metal is supplied to the sleeve. Then, in an injection procedure (S**6**), the molten metal is injected into the cavity in the mold for molding. The time required for each procedure is, as shown in FIG. **9**, 8 sec (S**1**), 9 sec (S**2**), 2 sec (S**3**), 5 sec (S**4**), and 3 sec (S**5**).

[0030] Here, because a pump is used in the core insertion procedure (S**3**) and the mold clamping procedure (S**4**), the hydraulic oil cannot be supplied to ACC. The time of molten metal supply operation immediately before injection is only 3 sec, and therefore, an insufficient period of time. Consequently, ACC is charged in the product extraction procedure (S**1**) or the spray procedure (S**2**). A problem that arises in this case is that it requires (at least) 10 sec before the injection procedure is reached on the assumption that ACC is completely charged when the spray procedure (S**2**) comes to its end. This is the minimum time by the full-automatic operation, however, when an auxiliary operation by an operator is

necessary (half-automatic operation), the time of 5 to 10 sec is further required after spraying. In this case, the total time is 15 to 20 sec. During this time, the hydraulic oil in ACC loses it pressure due to the leak through the valve on the circuit and the pressure in actual use varies (reduces).

[0031] The variations in pressure cause an increase in speed and variations (reduction) of the highest value etc. in the injection accumulator (ACC) and cause variations in the pressure-increasing time and variations in pressure value of pressure-increasing in the pressure-increasing accumulator (ACC), directly affecting the variations in quality of the molded product. In order to prevent this, a logic valve, which has the least leak, is provided at the exit of ACC, that is, an injection logic valve **71** and a pressure-increasing logic valve **73** in a conventional circuit in FIG. **10** and an injection logic opening/closing valve **70** and a pressure-increasing logic opening/closing valve **72** are further necessary. By providing these valves, the period of time during which the pressure is below an allowable value due to reduction in pressure is lengthened from 8 to 10 sec to 40 to 60 sec. Due to this, the above-mentioned problem is solved and therefore all conventional die casting machines have adopted this method.

[0032] On the other hand, the highest value of the injection speed of the recent die casting machine is required to be 10 m/sec, that is double the conventional speed of 5 m/sec. It is also demanded to reduce the time to reach a high speed, which is 20 msec for a conventional machine, to 0.5 to 5 msec, i.e., one-fourth of the conventional time. In this case, it is necessary to minimize the pipe conduit resistance from the injection ACC to the injection cylinder, and therefore, a large burden is imposed because of the logic valves **71**, **73**. Such a problem exists in relation to the logic valve.

[0033] Further, another injection system has been proposed (for example, refer to patent documents 4 and 5); however, it has disadvantages to be improved, such as the increase in size, insufficient maintainability and working environment, and the limit to the reduction in size and weight.

[0034] Another conventional proposal (refer to patent document 6) is a standard hydraulic circuit, and there are provided cartridge valves **22**, **28**, which is a logic valve, in this conventional proposal and these logic valves are the target to be eliminated in the present invention. The conventional example in FIG. **10** is a hydraulic circuit based on the conventional proposal in patent document 6, i.e., a hydraulic injection system of conventional type, not a hybrid type, a hydraulic circuit for injection cylinder comprising an accumulator for low pressure (injection piston accumulator **30**) and an accumulator for high pressure (pressure-increasing piston accumulator **32**). In the conventional example in FIG. **10**, the injection logic valve **71**, the injection logic opening/closing valve **70**, the pressure-increasing logic valve **73**, and the pressure-increasing logic opening/closing valve **72** are provided. As described above, these logic valves function so as to prevent the leak of hydraulic pressure from piston accumulators **31**, **33**. As to the hydraulic circuit in the conventional example shown in FIG. **10**, its explanation is redundant with those which are to be explained in detail in the embodiments of the present invention, and therefore, the explanation of unnecessary parts is omitted to simplify explanation. In addition, in the conventional example shown in FIG. **10**, the same constituent pars as those in the embodiments of the present invention shown in FIG. **7** and FIGS. **8***a* to **8***h* are designated by the same reference symbols.

[0035] In FIG. **10**, reference numerals **32** and **34** denote an injection gas bottle and a pressure-increasing gas bottle. Reference numerals **77**, **78**, **79** denote stop valves. Reference numerals **18** and **19** denote electromagnetic switching valves and are provided in a pump supply line **36**. Reference numeral **75** denotes an electromagnetic three-way switching valve and is provided on the upstream side of a valve M**24**. Reference numeral **76** denotes an electromagnetic three-way switching valve and is provided in a line that communicates with a rod chamber of an injection cylinder.

[0036] [Patent document 1] Japanese Unexamined Patent Publication (Kokai) No. 2000-033472

[0037] [Patent document 2] Japanese Unexamined Patent Publication (Kokai) No. 2000-084654

[0038] [Patent document 3] Japanese Unexamined Patent Publication (Kokai) No. 2001-001126

[0039] [Patent document 4] Japanese Unexamined Patent Publication (Kokai) No. 2006-000887

[0040] [Patent document 5] Japanese Patent Application No. 2006-115859

[0041] [Patent document 6] Japanese Unexamined Patent Publication (Kokai) No. 8-117962

SUMMARY OF THE INVENTION

[0042] The present invention has been developed the above circumstances being taken into consideration, and an object thereof is to provide an injection system of a die casting machine, and more particularly, a hybrid injection system capable of preventing the occurrence of a large power loss and of reducing the size of a motor by avoiding the need to keep a large current flowing at a pressure holding step when the system is of type in which a pressure-increasing step for increasing pressure of molten metal for injection pressure and a pressure-holding step for holding pressure of molten metal after the pressure-increasing step are performed electrically.

[0043] Another object of the present invention is to provide a hybrid injection system of a die casting machine capable of achieving the required injection performance, such as an increase in the injection speed, by eliminating a logic valve at the exit of an accumulator to considerably reduce the fluid resistance. Further, the cost of the injection system is reduced.

[0044] In the conventional injection system in which the injection plunger is controlled by an electric mechanism and a hydraulic mechanism, one of factors that impede the further reduction in size and weight, and an increase in speed, is the adoption of a back-and-forth movement structure by the electric mechanism, in which the injection plunger is driven directly. That is, when the injection plunger is moved back and forward (forth) by the electric mechanism, the hydraulic mechanism that drives the injection plunger also needs to be moved back and forward, and therefore, there is a limit to the reduction in size and weight of the electric mechanism.

[0045] The above present circumstances being taken into consideration, an object of the present invention is to provide a high-speed injection system, in which a plunger is driven by a simple drive mechanism, which is small and light, and excellent not only in controllability but also in maintainability.

[0046] In order to attain the above-described objects, an injection system (**10**) of a die casting machine according to a first embodiment of the present invention comprises an injection cylinder (**16**) housing an injection piston (**15**) for injecting a molten metal, such as aluminum, into a mold of the die casting machine, and an electric booster (**8**) of hydraulic

cylinder type. In the injection system, a head chamber (**8**H) of the electric booster (**8**) communicates fluidly with a head chamber (**16**H) of the injection cylinder (**16**), and therefore, injection molding is performed by moving linearly a booster piston rod (**5**) housed in the electric booster (**8**) to supply hydraulic oil to the head chamber (**16**H) of the injection cylinder (**16**) and press under pressure to move the injection piston (**15**). The electric booster (**8**) has a structure in which pressure of the hydraulic oil acts on a head area of the electric booster (**8**) at a pressure-increasing step for increasing pressure of the molten metal and pressure of the hydraulic oil acts on a rod area thereof at a pressure-holding step for holding pressure of the molten metal in an injection molding process.

[0047] More specifically, communicating pipes (**41**, **43**, **44**, **45**) that cause the head chamber (**16**H) of the injection cylinder to communicate fluidly with the rod chamber (**8**R) of the booster (**8**) are provided and the communicating pipe is provided with a stop valve (**25**) to cause hydraulic oil to flow intermittently.

[0048] It is preferable for the electric booster (**8**) to be driven by an electric motor (**1**), and for the electric motor (**1**) to be a servo motor.

[0049] Further, it is preferable for the injection system (**10**) to further comprise an injection piston accumulator (**31**) for supplying hydraulic oil to the head chamber (**16**H) of the injection cylinder and a stop valve (**26**) to be provided in the pipe (**43**) that causes a rod chamber (**8**R) of the booster to communicate fluidly with a tank (**35**), and for a rod chamber (**16**R) of the injection cylinder (**16**) to communicate fluidly with the tank (**35**) and a hydraulic oil supply inlet (**36**) from a pump etc.

[0050] It is preferable for the injection system to further comprise a pressure detection sensor (**37**) for detecting a head pressure, that is, the pressure in the head chamber (**16**H) of the injection cylinder (**16**), in the electric booster (**8**) and with this, the head pressure is detected and the control of the torque of the electric motor (**1**), the control of switching from the pressure-increasing operation to the pressure-holding operation, etc., are performed.

[0051] An injection system (**100**) of a die casting machine according to a second embodiment of the present invention comprises an injection cylinder (**16**) housing an injection piston (**15**) for injecting molten metal, such as aluminum, into a mold of the die casting machine, an electric booster (**8**) of a hydraulic cylinder type housing a booster piston rod (**5**) for performing injection molding by supplying hydraulic oil to a head chamber (**16**H) of the injection cylinder (**16**) and pressing under pressure to move the injection piston (**15**), a piston accumulator (**31**) formed so as to be capable of storing a predetermined amount of hydraulic oil at a predetermined maximum pressure and also capable of supplying hydraulic oil to the head chamber (**16**H) of the injection cylinder (**16**) and pressing under pressure to move the injection piston (**15**), the piston accumulator (**31**) performing injection molding in cooperation with the electric booster (**8**), and a first switching valve (**24**) provided on an exit side of the piston accumulator (**31**) and capable of opening/closing a flow passage of hydraulic oil from an exit of the piston accumulator (**31**). The injection system (**100**) is characterized in that the elimination of a logic valve is enabled, which would be provided originally at the exit of the piston accumulator (**31**) in order to prevent the leak of hydraulic oil through the first switching valve (**24**), by supplying hydraulic oil to the piston accumulator (**31**) immediately before the commencement of injection. Specifically, immediately before the commencement of injection, the molten metal supply process is performed and during the molten metal supply process, the supply of hydraulic oil to the piston accumulator (**31**) is completed.

[0052] More specifically, a head chamber (**8**H) of the electric booster (**8**) communicates fluidly with the head chamber (**16**H) of the injection cylinder (**16**) and also communicates fluidly with the exit of the piston accumulator (**31**), a flow passage that causes the head chamber (**8**H) of the electric booster to communicate fluidly with the head chamber (**16**H) of the injection cylinder is provided with a second switching valve (**25**), and the second switching valve (**25**) connects fluidly, on one side of flow passage connections, to a flow passage that communicates with the head chamber (**8**H) of the electric booster and to a flow passage that communicates with the tank (**35**) in which hydraulic oil is stored, and on the other side of the flow passage connections, connecting fluidly to a flow passage that communicates with the head chamber (**16**H) of the injection cylinder (**16**) and to a flow passage that communicates with the piston accumulator (**31**).

[0053] It is preferable for the supply of hydraulic oil to the piston accumulator (**31**) to be performed by the electric booster (**8**) and for the hydraulic oil in the head chamber (**8**H) of the electric booster (**8**) to be pressed under pressure and supplied, and further, it is preferable to drive the electric booster (**8**) to supply hydraulic oil to the rod chamber (**16**R) of the injection cylinder (**16**) in order to return the injection piston (**15**) to an end part on a head side of the injection cylinder (**16**) after the injecting operation is completed.

[0054] More specifically, the injection system further comprises a third switching valve (**62**) provided in a flow passage that causes the rod chamber (**8**R) of the electric booster to communicate fluidly with the head chamber (**16**H) of the injection cylinder. The first switching valve (**24**) connects fluidly, on one side of the flow passage connections, to a flow passage that communicates with the piston accumulator (**31**) and to a flow passage that communicates with the tank (**35**) in which hydraulic oil is stored, and on the other side of the flow passage connections, connecting fluidly to a flow passage that communicates with the head chamber (**16**H) of the injection cylinder (**16**) and to a flow passage that communicates with the rod chamber (**16**R) of the injection cylinder (**16**), and a third switching valve (**62**) connects fluidly, on one side of the flow passage connections, to a flow passage that communicates with the tank (**35**) and to a flow passage that communicates with the rod chamber (**8**R) of the injection electric booster, and on the other side of the flow passage connections, connecting fluidly to a flow passage that communicates with the head chamber (**16**H) of the injection cylinder (**16**) and to a flow passage that communicates with the rod chamber (**16**R) of the injection cylinder (**16**).

[0055] The inventors of the present invention have attentively discussed a small-sized, light, high-speed injection structure that uses both an electric mechanism and a hydraulic mechanism (hybrid high-speed injection mechanism) capable of manufacturing a high-quality molded product having a complicated shape with high yield.

[0056] As a result, the inventors of the present invention have found that a high-quality molded product having a complicated shape can be manufactured with high yield by providing a piston rod that moves back and forward by an electric mechanism in a hydraulic cylinder behind the piston rod to which a plunger is linked and by appropriately driving the two

piston rods alone or in the form of integration so that the back-and-forth movement of the plunger can be accurately controlled at a high speed.

[0057] The present invention has been developed based on the above-mentioned knowledge and the essentials thereof are as follows.

[0058] (1) A hybrid high-speed injection system excellent in controllability characterized in that a piston rod controlled by a back-and-forth movement control mechanism is provided behind a hydraulic cylinder that incorporates a plunder rod controlled by a hydraulic control mechanism in an injection system that drives a plunger to fill a mold cavity with molten metal.

[0059] (2) The hybrid high-speed injection system excellent in controllability according to the above-mentioned item (1), characterized in that the back-and-forth movement control mechanism is a ball screw mechanism.

[0060] (3) The hybrid high-speed injection system excellent in controllability according to the above-mentioned item (2), characterized in that the ball screw mechanism is driven by a servo motor.

[0061] (4) A hybrid high-speed injection control method for controlling the filling of a mold cavity with molten metal by providing a piston rod controlled by a back-and-forth movement control mechanism behind a hydraulic cylinder that incorporates a plunger rod controlled by a hydraulic control mechanism and driving the hydraulic control mechanism and the back-and-forth movement control mechanism in conjunction with each other, characterized by

[0062] (i) driving the back-and-forth movement control mechanism to move forward the plunger rod integrated with the piston rod until a low-speed/high-speed switching position is reached, and after its arrival,

[0063] (ii) driving the hydraulic control mechanism to move forward the plunger at a high speed in cooperation with the back-and-forth movement control mechanism.

[0064] (5) The hybrid high-speed injection control method according to the above-mentioned item (4), characterized in that the drive of the hydraulic control mechanism is feedback-controlled in real time according to an increasing curve up to a preset injection pressure.

EFFECTS OF THE INVENTION

[0065] According to the present invention, in a hydraulic circuit of a hybrid injection system of a die casting machine in which a pressure-increasing step for increasing pressure of molten metal for injection pressure and a pressure-holding step for holding pressure of molten metal after the pressure-increasing step are performed electrically, by providing, for example, a switching valve capable of communicating the pressure in an injection cylinder head chamber to a booster rod chamber at the pressure-holding step, the need to keep a large current flowing at the pressure-holding step is avoided by reducing the necessary maximum torque of a servo motor that drives a booster piston rod and the occurrence of a large electric power loss can be prevented and the motor size can be reduced. Because of this, it is possible to reduce the manufacturing cost of an injection system as well as reducing the size of the injection system itself.

[0066] By further comprising the pressure detection sensor (**37**) for detecting a head pressure, that is, the pressure in the head chamber (**16**H) of the injection cylinder (**16**), the torque of the electric motor (**1**) can be controlled so that the head pressure becomes a predetermined value by detecting the head pressure, and therefore, stable and accurate injection molding is enabled. Furthermore, it is possible to prevent an undesired operation, such as increasing the injection pressure excessively, by performing switching control from the pressure-increasing operation to the pressure-holing operation based on the head pressure.

[0067] Still furthermore, according to the second embodiment, the logic valve at the exit of the accumulator (ACC), which is provided to prevent the leak of hydraulic oil from the piston accumulator, can be eliminated and the pipe conduit resistance can be considerably reduced, and therefore, it is possible to reduce costs as well as making it easy to achieve the required injection performance.

[0068] According to the present invention, it is possible to control switching/pressure intensification at the low-speed/high-speed switching position with excellent responsivity and high precision at a high speed as well as further reducing the size and weight of the injection system itself compared to a conventional device. Consequently, it is possible to manufacture a high-quality molded product with high yield according to the present invention. In addition, the present invention is also by far more excellent in the maintainability accompanying the further reduction in size and weight.

[0069] The symbols in the parenthesis attached to each means indicate the relationship of correspondence with specific means in embodiments, which will be described later.

[0070] The present invention may be more fully understood from the description of the preferred embodiments of the invention set forth below, together with the accompanying drawings.

BRIEF DESCRIPTION OF THE DRAWINGS

[0071] FIG. **1** is an explanatory diagram showing a general configuration of a hydraulic circuit in an embodiment of an injection system for a die casting machine according to the present invention.

[0072] FIG. **2***a* is an explanatory diagram showing a state of a hydraulic circuit in various working processes in a die casting machine, showing the circuit at a low-speed injection step.

[0073] FIG. **2***b* is an explanatory diagram showing a state of a hydraulic circuit in various working processes in a die casting machine, showing the circuit at a high-speed injection step.

[0074] FIG. **2***c* is an explanatory diagram showing a state of a hydraulic circuit in various working processes in a die casting machine, showing the circuit at a pressure-increasing step.

[0075] FIG. **2***d* is an explanatory diagram showing a state of a hydraulic circuit in various working processes in a die casting machine, showing the circuit at a pressure-holing step.

[0076] FIG. **2***e* is an explanatory diagram showing a state of a hydraulic circuit in various working processes in a die casting machine, showing the circuit at a projection step.

[0077] FIG. **2***f* is an explanatory diagram showing a state of a hydraulic circuit in various working processes in a die casting machine, showing the circuit at a of back movement step.

[0078] FIG. **3** is a graph (injection characteristic diagram) showing the change of the injection speed of an injection piston and the cylinder head pressure versus the injection time (or injection stroke) in an operation process of a die casting machine.

[0079] FIG. **4** is a graph in which each process (region) at the pressure-increasing step, the pressure-holding step, etc., is written in an easy-to-see manner in the graph in FIG. **3**.

[0080] FIG. **5** is an explanatory diagram showing a difference between the hydraulic circuit in a pressure-increasing process in FIG. **2***c* (booster circuit at the pressure-increasing step) and the hydraulic circuit in the pressure-holding process in FIG. **2***d* (pressure-holding circuit), showing a booster circuit at the pressure-increasing step.

[0081] FIG. **6** is an explanatory diagram showing a difference between the hydraulic circuit in the pressure-increasing process in FIG. **2***c* (booster circuit at the pressure-increasing step) and the hydraulic circuit in the pressure-holding process in FIG. **2***d* (pressure-holding circuit), showing a booster circuit at the pressure-holding step.

[0082] FIG. **7** is an explanatory diagram showing a general configuration of a hydraulic circuit in a second embodiment of an injection system for a die casting machine according to the present invention.

[0083] FIG. **8***a* is an explanatory diagram showing a state of the hydraulic circuit in FIG. **7** in various working processes in a die casting machine, showing the circuit at an accumulator filling (charging) step.

[0084] FIG. **8***b* is an explanatory diagram showing a state of the hydraulic circuit in FIG. **7** in various working processes in a die casting machine, showing the circuit at the low-speed injection step.

[0085] FIG. **8***c* is an explanatory diagram showing a state of the hydraulic circuit in FIG. **7** in various working processes in a die casting machine, showing the circuit at the high-speed injection step.

[0086] FIG. **8***d* is an explanatory diagram showing a state of the hydraulic circuit in FIG. **7** in various working processes in a die casting machine, showing the circuit at the pressure-increasing step.

[0087] FIG. **8***e* is an explanatory diagram showing a state of the hydraulic circuit in FIG. **7** in various working processes in a die casting machine, showing the circuit at the pressure-holding step.

[0088] FIG. **8***f* is an explanatory diagram showing a state of the hydraulic circuit in FIG. **7** in various working processes in a die casting machine, showing the circuit at the projection step.

[0089] FIG. **8***g* is an explanatory diagram showing a state of the hydraulic circuit in FIG. **7** in various working processes in a die casting machine, showing the circuit at the back movement step.

[0090] FIG. **9** is an explanatory diagram showing a flow of a process before injection starts in general injection molding, simultaneously showing the required time of each process.

[0091] FIG. **10** is an explanatory diagram showing a general configuration of a hydraulic circuit of an injection system for a conventional hydraulic die casting machine.

[0092] FIG. **11** shows a table of comparison between the accumulator charge time and the shortest molten metal supply time of an actual machine (machine with a mold clamping force of 375 tons to 4,000 tons).

[0093] FIG. **12** is a diagram showing a structure of a hybrid high-speed injection system of the present invention.

[0094] FIG. **13** is a diagram showing an aspect immediately before the commencement of injection in the present invention.

[0095] FIG. **14** is a diagram showing an aspect immediately before a plunger reaches a low-speed/high-speed switching position S in the present invention.

[0096] FIG. **15** is a diagram showing an aspect when a plunger rod moves forward at a high speed in the present invention.

[0097] FIG. **16** is a diagram showing an aspect when the filling of molten metal is completed and the forward movement of the plunger rod almost comes to a stop in the present invention.

[0098] FIG. **17** is a diagram showing an aspect when injection is completed and the forward movement of the plunger rod comes to a complete stop in the present invention.

[0099] FIG. **18** is a diagram showing an aspect when the piston rod and the plunder rod are moved forward in integration with each other in order to discharge solidified material that remains in an injection sleeve in the present invention.

[0100] FIG. **19** is a diagram showing an aspect when the plunger rod and the piston rod are moved back in order to prepare for the next injection in the present invention.

[0101] FIG. **20** is a diagrams showing an increasing progress of injection pressure in the present invention.

[0102] FIG. **21** is a diagram showing another structure of a hybrid high-speed injection system of the present invention.

[0103] FIG. **22** is a diagram showing an aspect immediately before the commencement of injection in the present invention.

[0104] FIG. **23** is a diagram showing another aspect immediately before the plunger reaches the low-speed/high-speed switching position S in the present invention.

[0105] FIG. **24** is a diagram showing another aspect when the plunger moves forward at a high speed in the present invention.

[0106] FIG. **25** is a diagram showing another aspect when the filling of molten metal is completed and the forward movement of the plunger rod almost comes to a stop in the present invention.

[0107] FIG. **26** is a diagram showing another aspect when injection is completed and the forward movement of the plunger rod comes to a complete stop in the present invention.

[0108] FIG. **27** is a diagram showing another aspect when the piston rod and the plunger rod are moved forward in integration with each other in order to discharge solidified material that remains in the injection sleeve in the present invention.

[0109] FIG. **28** is a diagram showing another aspect when the plunger rod and the piston rod are moved back in order to prepare for the next injection in the present invention.

[0110] FIG. **29** is a diagram showing another increasing progress of injection pressure in the present invention.

DESCRIPTION OF THE PREFERRED EMBODIMENTS

[0111] An injection system for a die casting machine of the present invention is explained below in detail based on embodiments and with reference to the drawings. FIG. **1** and FIGS. **2***a* to **2***f* show a first embodiment of the injection system for a die casting machine according to the present invention, wherein FIG. **1** is an explanatory diagram showing a general configuration of a hydraulic circuit in the first embodiment of the injection system for a die casting machine, and FIGS. **2***a* to **2***f* are explanatory diagrams showing a state of the hydraulic circuit in various processes in the die casting machine in FIG. **1**.

[0112] An injection system **10** in the present embodiment is a hybrid type in which a servo motor **1** drives a booster piston rod **5** to activate an injection piston (plunger) **15** and then molten aluminum (AL) is injected into a mold.

[0113] A hydraulic circuit of the injection system **10** in the present embodiment comprises the servo motor **1** as an electric drive part, the servo motor **1** links with a drive gear **2** to drive it rotationally, the drive gear **2** engages with a ball nut gear **3** the outside of which is a toothed gear and the inside of which is threaded, the ball nut gear **3** engages with a ball nut screw shaft **4** the outer surface of which is threaded, however, the ball screw shaft **4** penetrates through an opening that passes the center of the ball nut gear **3**. The upper end part of the ball screw shaft **4** links with one of the end parts of a top plate **7** and the other end part of the top plate **7** links with the upper end part of the booster piston rod **5**. In such a configuration, the ball screw shaft **4** reciprocates in the vertical direction by the rotational motion of the servo motor **1** and further, the booster piston rod **5** reciprocates in the vertical direction.

[0114] At the lower end part of the booster piston rod **5**, a booster piston **6** is provided and the booster piston **6** reciprocates in a cylindrical booster **8** by the vertical motion of the booster piston rod **5** and thus discharges under pressure and sucks hydraulic oil in the booster (cylinder) **8**. The front end part on the side of a booster head chamber **8**H of the booster **8** communicates fluidly with an injection cylinder head chamber **16**H of an injection cylinder **16** as shown in FIG. **1**. In the present embodiment, as shown in FIG. **1**, while the injection cylinder **16** is installed horizontally, the booster **8** is installed vertically so as to be perpendicular to the injection cylinder **16**, and this configuration is generally referred to as a vertical type. The injection system **10** in the present embodiment is explained as a vertical type; however, the injection system of the present invention may be a horizontal type in which the booster **8** is installed horizontally and connects with the injection cylinder **16** in parallel.

[0115] The injection piston **15** is housed in the injection cylinder **16** and to the injection piston **15**, a plunger tip (not shown) is attached at its front end in the leftward direction and the plunger tip is housed in a plunger sleeve (not shown) that penetrates through a fixed mold of the die casting machine, and the plunger sleeve communicates fluidly with the mold. The injection system **10** of the present embodiment comprises an injection piston accumulator (ACC) **31** and a gas bottle **32** that pressurizes and drives the accumulator **31**, a valve A **21**, a valve B **22**, a valve C **23**, a valve M **24**, and a tank **35** for storing hydraulic oil.

[0116] In the present embodiment, the hydraulic circuit of the injection system **10** comprises, as shown in FIG. **1**, a valve D **25** and a valve E **26** provided in piping lines **45**, **44**, **43** that connect the head chamber **16**H of the injection cylinder **16** and a rod chamber **8**R of the cylindrical booster **8** to the tank **35**, and a pressure detection sensor **37** provided on the end surface on the side of the head chamber of the booster **8**.

[0117] Next, the operation of the injection system in the present embodiment is explained.

[0118] FIG. **2***a* shows a state of the hydraulic circuit at a low-speed injection step. At the low-speed injection step in FIG. **2***a*, the booster piston rod **5** is driven downward (forward movement) by the servo motor **1**, pressing the hydraulic oil in the booster head **8**H at a low speed to cause the hydraulic oil to flow into the injection cylinder chamber **16**H, and further pressing under pressure the injection piston **15** in the injection cylinder **16** in the leftward direction (direction toward the plunger sleeve in which molten AL is stored). At this time, the booster piston rod **5** in the present embodiment has a small diameter, and therefore, the rod chamber **8**R is formed in the booster **8** and to the booster rod chamber **8**R, the piping lines **44**, **43** that communicate fluidly with the tank **35** via the valve E **26** are connected as shown in FIG. **2***a*. Consequently, the valve E **26** is released when the booster piston rod **5** descends, and therefore, the hydraulic oil flows into the booster rod chamber **8**R from the tank **35** via the lines **43**, **44** and the valve E **26**. At this time, the tank **35** may be installed at a position higher than the booster rod chamber **8**R so that the hydraulic oil flows into the booster rod chamber **8**R by the gravity, or the hydraulic oil may be supplied to the booster rod chamber **8**R by another means, such as a pump. The plunger tip (not shown) is attached to the front end in the leftward direction of the injection piston **15** and the plunger tip is housed in the plunger sleeve (not shown) that penetrates through the inside of the fixed mold and presses under pressure aluminum (AL) molten to fill the cavity in the mold (not shown) therewith. At the low-speed injection step, the valve B **22** is open and the valve C **23** is closed, and the hydraulic oil in. an injection cylinder rod chamber **16**R flows through the piping line **42** and the released valve B **22** to the tank **35** by the movement of the injection piston **15** in the leftward direction. The low-speed injection step corresponds to time t**0** to t**1** in FIG. **3** and FIG. **4** (in which a low-speed injection region etc. is explained in FIG. **3**). At the low-speed injection step, by controlling the rotation of the servo motor **1**, it is possible to perform shockless control to relax the impact at the time of start, low-speed injection speed multi-stage control, and real-time speed control.

[0119] FIG. **2***b* shows the hydraulic circuit at a high-speed injection step. At the next high-speed injection step in FIG. **2***b*, while causing the booster piston rod **5** to continue (further from the state in FIG. **2***a*) descending (forward movement), the valve M **24** is operated in the open direction to introduce the hydraulic oil in the injection piston accumulator (ACC) **31** to the head chamber **16**H of the injection cylinder **16** via the piping line **41**, and thus the injection piston **15** is driven at a high speed by introducing hydraulic oil at a high flow rate from two power sources. At this time, the valve E **26** is open and the valve D **25** is closed, and the valve B **22** is open and the valve C **23** remains closed, and the valve A **21** is also closed. Here, by controlling the opening of the valve M **24**, the high-speed injection is completed while controlling a high speed (during this period of time, the booster piston rod **5** continues moving forward). The high-speed injection step corresponds to time t**1** to t**2** in FIG. **3** and FIG. **4**.

[0120] FIG. **2***c* shows the hydraulic circuit at a pressure-increasing step. At the pressure-increasing step in FIG. **2***c*, the valve M **24** is closed from the state in FIG. **2***b* and in the state where the hydraulic pressure from the injection piston accumulator (ACC) **31** is shut off, by causing the booster piston rod **5** to further move forward (descend), the pressure in the injection cylinder head chamber **16**H is increased. At this time, the valve E **26** is open and the valve D **25** is closed, and the valve B **22** is open and the valve C **23** remains closed, and the valve A **21** is also closed. The pressure-increasing step corresponds to time t**2** to t**3** in FIG. **3** and FIG. **4** and the pressure of molten AL in the mold cavity is increased.

[0121] Then, the pressure applied by the booster **8** is measured by the pressure detection sensor **37** and when the pressure reaches 80 to 90% of its target pressure, the hydraulic circuit is switched to the hydraulic circuit at the pressure-

holding step shown in FIG. **2***d*. In the hydraulic circuit at the pressure-holding step in FIG. **2***d*, the booster piston rod **5** is caused to move forward (descend) by the servo motor **1** and thus the valve E **26** is switched to the closed state and the valve D **25** is switched to the open state. Due to this, the pressure of the hydraulic oil pressed by the booster piston **6** is transferred to the rod chamber **8**R of the booster **8**, and therefore, the force that should be exhibited by the servo motor **1** is a force of the product of the area corresponding to the diameter of the booster piston rod **5** and the pressure, and it is possible to exhibit the same force as that which presses under pressure the conventional injection piston **15**. In this process, the valve B **22** is open and the valve C **23** remains closed, and the valve A **21** and the valve M **24** are also closed. The pressure-holding step corresponds to time t**3** to t**4** in FIG. **3** and FIG. **4**.

[0122] After that, the projection process shown in FIG. **2***e* is performed and in this process, by causing the booster piston rod **5** to move forward (descend) by the servo motor **1** to press the injection piston **15** in the leftward direction, the mold is opened and the molded product can be extracted. Further, the injection return process in FIG. **2***f* is performed and hydraulic oil is supplied from a pump supply inlet **36** into the injection cylinder rod chamber **16**R via the line **42** and the injection piston **15** is moved to the side of the head (in the rightward direction) in the injection cylinder **16** and at the same time, the booster piston rod **5** is driven upward by the servo motor **1**. The hydraulic oil in the injection cylinder head chamber **16**H and the booster rod chamber **8**R is returned to the tank **35** when both the valve A **21** and the valve E **26** are opened. In the projection process shown in FIG. **2***e*, the valve E **26** is open and the valve D **25** is closed, and the valve B **22** is open and the valve C **23** remains closed, and the valve A **21** and the valve M **24** are also closed. In the injection return process shown in FIG. **2***f*, the valve E **26** is open and the valve D **25** is closed, and the valve B **22** is closed and the valve C **23** is set to the open state, and the valve A **21** is open and the valve M **24** is closed.

[0123] The difference between the hydraulic circuit in the pressure increase process (booster circuit at the pressure-increasing step) in FIG. **2***c* and the hydraulic circuit in the pressure-holding process (pressure-holding circuit) in FIG. **2***d* (that is, the difference between FIG. **2***c* in which the valve E **26** is open and the valve D **25** is closed and FIG. **2***d* in which the valve E **26** is switched to the closed state and the valve D **25** is switched to the open state) is shown in FIG. **5** and FIG. **6**. At the pressure-increasing step, the hydraulic oil is pressed in with an area A**8**H of the booster piston in order to shorten the time. At this time, a booster force F**1** that is necessary is

$$F1=A_{BH}\times P_H$$

[0124] A torque T**1** output from the motor at this time is

$$T1=C\times F1$$

$$T1=C\times A_{BH}\times P_H$$

[0125] At the pressure-holding step, the pressure in the head chamber of the booster is set the same as that in the rod chamber. Then, a torque T**2** that is necessary is

$$F2=A_{BR}\times P_H$$

$$T2=C\times A_{BR}\times P_H$$

[0126] If the rod area A_{BR} is set one-third of the head area A_{BH}, the necessary torque decreases at the same rate and the motor current value in proportion with the torque also decreases at the same rate and thus the problem, such as energy loss, motor trip, etc. can be solved. In this case it should be noted that if the circuit is switched to another while the torque T**1** is maintained, the pressure P_H rises by an amount corresponding to the ratio between the rod area and the head area and there arises a problem that the pressurizing force of the injection cylinder becomes considerably excessive. Consequently, because P_H rises as the pressure is transferred to the rod chamber, it is necessary to perform automatic control to gradually decrease the servo motor torque by detecting the pressure with a pressure sensor and sensing that the pressure becomes the target value or exceeds it by several percent.

[0127] In the present embodiment, up to the pressure increase process, the same processes as those of the conventional example are performed, however, in the pressure-holding process, the method is incorporated in which the circuit is switched to another and the pressurizing area of the booster is changed. This is a method in which, attention being focused on the fact that the piston hardly moves at the pressure-holding step and the flow rate of oil to be sent needs to be 10 to 20 L/min, the area AB is changed rather than the head pressure P_H and thus the necessary torque T to be generated is decreased and the current value is decreased because the necessary torque T of the motor to be generated is in proportion to the area A_B of booster pressurization and the head pressure P_H (P_H is fixed in order to hold the pressurizing force of the injection piston).

$$T=C\times A_B\times P_H$$

Second Embodiment

[0128] Next, an injection system **100** for a die casting machine in a second embodiment of the present invention is explained. FIG. **7** and FIGS. **8***a* to **8***g* show the injection system **100** for a die casting machine according to the second embodiment of the present invention, wherein FIG. **7** is an explanatory diagram showing a general configuration of a hydraulic circuit in the second embodiment of the injection system for a die casting machine, and FIGS. **8***a* to **8***g* are explanatory diagrams showing a state of the hydraulic circuit in various working processes in a die casting machine, The constituent parts in FIG. **7** and FIGS. **8***a* to **8***g* that are the same as or similar to the constituent parts in the first embodiment shown in FIG. **1** and FIGS. **2***a* to **2***f* are designated by the same reference symbols.

[0129] In the first embodiment, there is no description of the leak of hydraulic oil from the injection piston accumulator **31** (that is, the leak through the valve M **24**), and no explanation is given as to the timing of the filling of the injection piston accumulator **31**. In the second embodiment, the configuration around the electric booster **8** and the configuration around the injection cylinder **16** are the same as those in the first embodiment, and therefore, an explanation is omitted. The hydraulic circuit in the second embodiment is a type that fills (charges) the injection piston accumulator **31** using the booster **8**, different from the hydraulic circuit in the first embodiment, and its contrast to the conventional hydraulic circuit in FIG. **10**, which is a hydraulic type, is definite.

[0130] In the hydraulic circuit in FIG. **7** in the second embodiment, the valve M **24**, which is a motor valve capable of opening/closing at a high speed, is installed on the side of the exit of the injection piston accumulator **31** (as in the first embodiment), however, the valve A **21** is provided in a line

that branches from a line between the injection piston accumulator **31** and the valve M **24** (as in the conventional example in FIG. **10**, different from that in the first embodiment). Preferably, in a line that connects the booster head chamber **8**H of the booster **8** and the injection cylinder head chamber **16**H of the injection cylinder **16**, the valve D (switching valve) **25** is provided and in a line that connects the booster rod chamber **8**R and the valve M **24**, a motor valve **62** capable of opening/closing at a high speed is provided as shown in FIG. **7**.

[0131] Next, the operation of the injection system **100** in the present embodiment is explained. The operation in each process in the present embodiment is basically the same as the operation in the same process in the first embodiment, and therefore, the explanation of the details of the operation, the states of the valve, etc., explained in the first embodiment is not basically given in the present specification because they are obvious from the drawings.

[0132] FIG. **8***a* shows a filling (charge) process of the injection piston accumulator **31**, which is not explained in the first embodiment. In the present embodiment, this filling process is performed immediately before the injection process. In other words, what is performed is a molten metal supply process in FIG. **9**. At this time, as shown in FIG. **8***a*, the injection piston **15** has returned in the proximity to the end part on the side of the injection cylinder head chamber. By the servo motor **1**, the booster piston rod **5** is driven downward (forward movement) and presses the hydraulic oil in the booster head chamber **8**H at a low speed; however, the valve D **25** is set so as to guide the hydraulic oil to the line **61** at this time, and therefore, the hydraulic oil passes through the valve D **25** and a check valve **64** and fills the injection piston accumulator **31**. In the line of the line **61** that branches to the tank **35**, a check valve **65** is provided and thus the flow of the hydraulic oil to the tank **35** is prevented. In the present process, it may also be possible to complete the filling by providing a pressure sensor (not shown) in a line that connects the injection piston accumulator **31** and the valve A **21**, measuring the pressure of this line, and detecting that a predetermined pressure is reached. Different from this, it may also be possible to complete the filling by providing a sensor (not shown) that detects a position of the piston in the injection piston accumulator **31** and detecting that the piston has reached a predetermined position using this. In FIG. **8***a*, the supply of hydraulic oil to the booster rod chamber **8**R from the tank **35** is performed by means of gravity via the motor valve **62**, however, different from this, it may also be possible to perform the supply by means of a pump similarly as described in the first embodiment.

[0133] After the filling process, the low-speed injection process is performed. FIG. **8***b* shows a state of the hydraulic circuit at the low-speed injection step (process) corresponding to FIG. **2***a* in the first embodiment. At the low-speed injection step, the valve D **25** is switched so that the booster head chamber **8**H communicates with the injection cylinder head chamber **16**H and the booster piston rod **5** further descends and as in the first embodiment, the hydraulic oil is supplied to the injection cylinder head chamber **16**H. At this time, the low-speed forward movement speed of injection is determined by the control of the rotation speed of the servo motor **1**.

[0134] FIG. **8***c* shows a state of the hydraulic circuit at the high-speed injection step (process) corresponding to FIG. **2***b* in the first embodiment. At the high-speed injection step, the valve D **25** is set so that the booster head chamber **8**H communicates with the injection cylinder head chamber **16**H as before and the valve M **24** is opened and the hydraulic oil in the injection piston accumulator **31** is also introduced to the injection cylinder head chamber **16**H. This is the same as in the first embodiment. As shown in FIG. **8***c*, the hydraulic oil in the injection cylinder rod chamber **16**R is returned to the tank **35** via the valve M **24** and at the same time, returned to the tank **35** through another line **68** and via a throttle **28** and the valve B (switching valve) **22** in the open state in this order. The switching from the low-speed injection process to the high-speed injection process is performed by providing a position detection sensor (not shown) of the injection piston **15** and detecting that the injection piston **15** has reached a preset position.

[0135] FIG. **8***d* shows a state of the hydraulic circuit at the pressure-increasing step corresponding to FIG. **2***c* in the first embodiment. At the pressure-increasing step (process), the valve D **25** is set so that the booster head chamber **8**H communicates with the injection cylinder head chamber **16**H as before, however, the valve M **24** is switched and set so as to be capable of adjusting the flow rate, and therefore, part of the hydraulic oil in the injection cylinder head chamber **16**H is returned to the tank **35** via the valve M **24** and the valve A **21** (the valve A **21** is open). As shown in FIG. **8***d*, the hydraulic oil in the injection cylinder rod chamber **16**R is returned to the tank **35** via the throttle **28** and the valve B **22** (open state). At this time, the pressure in the injection cylinder head chamber **16**H is fed back in real time in accordance with a pressure-increasing pattern set in advance by the valve M **24** and the upper limit value of the increased pressure is determined by the torque control of the servo motor. Then, the amount of throttle of the throttle **28** is set fixed. In this manner, the pressure at the pressure-increasing step is maintained at a proper value. Switching from the high-speed injection process to the pressure-increasing process is performed by detecting that the injection piston **15** has reached a preset position or performed by detecting that the position has been reached and the value of the injection cylinder head pressure (PH) detected by the pressure detection sensor (not shown) has reached a preset value. The reason that the feedback control of pressure increase is not performed by only the servo motor **1** (the valve M **24** is also used) is that the axis-converted inertial force (inertial force value at the axis) of the servo motor **1** is large and the control responsivity is poor, and therefore, the feedback control is realized by controlling the valve M **24** excellent in responsivity. The pressure maximum value is determined by the torque control of the servo motor **1**.

[0136] FIG. **8***e* shows a state of the hydraulic circuit at the pressure-holding step corresponding to FIG. **2***d* in the first embodiment. At the pressure-holding step (process), the valve D **25** is set so that the booster head chamber **8**H communicates with the injection cylinder head chamber **16**H as before; however, the motor valve **62** is switched and part of the hydraulic oil in the injection cylinder head chamber **16**H is returned to the booster rod chamber **8**R via the motor valve **62**. As shown in FIG. **8***e*, the hydraulic oil in the injection cylinder rod chamber **16**R is returned to the tank **35** via the throttle **28** and the valve B **22**.

[0137] FIGS. **8***f* and **8***g* each show a state of the hydraulic circuit at the projection operation step (process) and that at the back movement operation step (process), respectively corresponding to FIGS. **2***e* and **2***f* in the first embodiment. As

shown in FIGS. **8***f* and **8***g*, the hydraulic circuit at these operation steps is basically the same as that in the first embodiment, and therefore, its detailed explanation is omitted. However, at the back movement operation step shown in FIG. **8***g*, by causing the servo motor **1** to lift the booster piston rod **5** to push out the hydraulic oil in the booster rod chamber **8**R and supplying the hydraulic oil to the injection cylinder rod chamber **16**R, the injection piston **15** in FIG. **8***g* is driven in the rightward direction and thus returned. At this time, the motor valve **62** and the valve D **25** are operated and the hydraulic oil in the injection cylinder head chamber **16**H is supplied to the booster head chamber **8**H via the motor valve **62**, the valve D **25**, and the check valve **65** as shown in FIG. **8***g*.

[0138] As described in the above-mentioned second embodiment, in the case of the injection system of electric booster type, low-speed injection is activated by the electric booster and high-speed injection is activated by the accumulator (ACC). In the conventional machine shown in FIG. **10**, all of the low-speed and high-speed strokes of the injection piston **15** are performed by the hydraulic oil in the piston accumulator **31** and thus injection is performed. On the other hand, in the present embodiment, because the ability of the electric booster to supply oil at a high flow rate and the amount of molten metal to be charged in the accumulator is about half that of the conventional machine, it is sufficiently possible to charge the accumulator (ACC) within the time of molten metal supply process immediately before the injection process.

[0139] As to the above explanation, it is further explained that charging (filling) of the accumulator is possible in the molten metal supply process with reference to FIG. **11** showing a table that compares the accumulator charging (filling) time and the shortest molten metal supply time of an actual machine. FIG. **11** shows that the accumulator (ACC) charging is completed sufficiently within the molten metal supply time with a machine having a mold clamping force of 375 t to 4,000 t. The highest value of speed required in low-speed injection is 0.5 m/sec or more (actually, it is set to 0.8 m/sec or 1.0 m/sec) and the maximum amount of molten metal to be supplied into the injection sleeve is at most 70% of the sleeve inner volume. Consequently, the maximum value of the necessary volume of the accumulator (ACC) used in high-speed injection is 70% of all strokes×cylinder area.

[0140] The accumulator charge time (t) shown in FIG. **11** is found by the following calculation expression.

$$V=A\times L\times 0.7\times 10^{-4}(\text{liter}) \quad \text{[expression 1]}$$

$$Q=A\times 500\times 10^{-4}(\text{liter/sec}) \quad \text{[expression 2]}$$

$$t=V/Q=(L\times 0.7)/500 \quad \text{[expression 3]}$$

[0141] Here, V is the required amount of oil (liter) to be supplied to the injection cylinder for high-speed injection, A is the area of the injection cylinder (cm^2), L is all of strokes of injection (mm), Q is the ability of the electric booster to supply oil (liter/sec), and t is the ACC charge time (sec).

[0142] A third embodiment of a hybrid high-speed injection system (the device of the present invention) of the present invention is explained based on the drawings. FIG. **12** shows a structure of the device of the present invention. FIG. **21** shows another structure of the device of the present invention.

[0143] 1) First, the structure shown in FIG. **12** and its drive aspect are explained.

[0144] In the structure shown in FIG. **12**, in a state when a movable mold **104** fixed on a movable disc **102** is closed with respect to a fixed mold **103** fixed on a fixed disc **101**, a mold cavity **105** as a mold space is formed. To the fixed mold **103**, an injection sleeve **106** is linked, and a plunger rod **108** comprising a plunger tip **107** that slides inside the injection sleeve **106** at its front end is driven at a high speed and thus the mold cavity **105** is filled with molten metal Me held in the injection sleeve **106**.

[0145] The rear end of the plunger rod **108** constitutes a piston **113** that slides inside a hydraulic cylinder **109** and the plunger rod **108** is driven by a hydraulic control mechanism **110** including the hydraulic cylinder **109**.

[0146] The hydraulic control mechanism **110** comprises an accumulator **111** connected to the hydraulic cylinder **109** via a high-speed valve **112** and opens the high-speed valve **112** by activating an electromagnetic opening/closing mechanism M according to a control signal (not shown) and drives the plunger rod **108** by supplying hydraulic oil from the accumulator **111** to an oil chamber **116**H behind the piston **113**.

[0147] In addition, in order to control the drive of the plunger rod **108** with high precision, an oil pressure sensor (not shown) that detects the hydraulic pressure of hydraulic oil is attached to the inside of the accumulator **111** and oil chambers **116**R, **116**H of the hydraulic cylinder **109**.

[0148] Then, a piston rod **114** that moves back and forward in the back-and-forth movement direction of the plunger rod **108** and realizes high-speed injection in cooperation with the plunger rod **108** at the injection step is provided in the oil chamber **116**H behind the piston **113** in order to control the drive of the plunger rod **108** with high precision and manufacture a high-quality molded product with high yield. The present invention is characterized by this point.

[0149] The rear end of the piston rod **114** is linked with the end part of a ball screw **117** of a ball screw mechanism **118** via a linking member **115** and it is possible to control the back-and-forth movement of the piston rod **114** including also the back-and-forth movement speed by controlling the rotation of a servo motor **119** according to a signal from a controller (not shown) constituting a back-and-forth movement control mechanism together with the servo motor mechanism **119** and the ball screw mechanism **118**.

[0150] In other words, by rotating the servo motor **119** in the right and left directions at a required rotation speed according to a control signal, it is possible to push the piston rod **114** and the plunger rod **108** in the form of integration or the plunger tip **107** separately into the injection sleeve at a required speed by a required distance.

[0151] As described above, the present invention is characterized by arranging the piston rod that realizes high-speed injection in cooperation with the plunger rod controlled by the hydraulic control mechanism therebehind and controlling the back-and-forth movement of the piston rod by the back-and-forth movement control mechanism rather than driving directly the plunger rod or the hydraulic control mechanism with the back-and-forth movement control mechanism at the injection step.

[0152] In other words, the present invention is characterized by combining the hydraulic control mechanism and the back-and-forth movement control mechanism and adopting a hybrid high-speed injection structure that exhibits the working effect of the combination in a synergic manner, and the

adoption makes it possible to control the drive of the plunger rod with high precision and manufacture a high-quality molded product with high yield.

[0153] Further, the back-and-forth movement control mechanism is just a mechanism that only controls the back-and-forth movement of the piston rod, and therefore, compared to the case where the hydraulic control mechanism is moved back and forward or the plunger rod is moved back and forward (in this case also, the hydraulic control mechanism of the plunger rod is also involved in the back-and-forth movement) as a result, the back-and-forth movement control mechanism can be reduced in size and weight. The present invention is characterized also by this point.

[0154] In FIG. **12**, as a configuration of the back-and-forth movement control mechanism, the ball screw mechanism **118** is shown; however, the back-and-forth movement control mechanism is required only to be a mechanical mechanism that moves back and forward the piston rod with excellent controllability, and not limited to the ball screw mechanism. The back-and-forth movement control mechanism may be, for example, a rack pinion mechanism.

[0155] Next, the basic drive aspect of the device of the present invention shown in FIG. **12** is explained based on FIG. **13** to FIG. **19**.

[0156] FIG. **13** shows an aspect of the device of the present invention immediately before a predetermined amount of molten metal is supplied into the injection sleeve (refer to FIG. **12**) through a supply gate (not shown) to start injection. At this time, the plunger rod **108** has moved back to the last end of the hydraulic cylinder **109** and the piston rod **114** is on standby in contact with the piston **113** of the plunger rod **108**.

[0157] Next, as shown in FIG. **14**, the ball screw mechanism **118** is driven by rotating the servo motor **119** according to the control signal and the piston rod **114** is moved forward with respect to the fixed disc at a predetermined speed in the form of integration with the plunger rod **108**. At this time, the electromagnetic opening/closing mechanism M is activated to close the high-speed valve **112** and the hydraulic oil is supplied to the oil chamber **116**H behind the piston **113** following the forward movement of the piston rod **114** and the plunger rod **108**, and then the hydraulic oil is discharged from the oil chamber **116**R in front.

[0158] As a result, the plunger rod **108** integrated with the piston rod **114** moves forward in the low-speed injection region in the injection sleeve at a predetermined speed of forward movement formed and maintained by the ball screw mechanism **118**.

[0159] Then, by detecting the distance of forward movement of the plunger rod **108** with a displacement sensor (not shown), the plunger rod **108** is moved forward only by the ball screw mechanism **118** until the front end of the plunger rod **108** reaches a position at which low-speed injection is switched to high-speed injection (low-speed/high-speed switching position S, refer to FIG. **14**).

[0160] The speed of forward movement of the plunger rod **108** may be maintained constant until the low-speed/high-speed switching position S is reached or may be accelerated in the middle of the movement.

[0161] When the plunger rod **108** reaches the low-speed/high-speed switching position S, the electromagnetic opening/closing mechanism M is activated to open the high-speed valve **112** and hydraulic oil is supplied from the accumulator **111** to the oil chamber **116**H at the rear to move forward the plunger rod **108** at a high speed as shown in FIG. **15**. From the oil chamber **116** in front, the hydraulic oil is discharged.

[0162] After the plunger rod **108** reaches the low-speed/high-speed switching position S also, the ball screw mechanism **118** is driven continuously to move forward the piston rod **114** and apply pressure to the hydraulic oil in the oil chamber **116**H. By this pressurization, it is possible to increase the speed of forward movement of the plunger rod **108** and fill the mold cavity with molten metal in the injection sleeve at a stable and high speed. As a result, it is possible to manufacture a high-quality molded product with high yield.

[0163] This point is the functional characteristic of the device of the present invention that adopts a hybrid high-speed injection structure.

[0164] The device of the present invention adopts a hybrid high-speed injection structure in which the hydraulic control mechanism is not driven until the plunger rod reaches the low-speed/high-speed switching position S and the plunger rod is moved forward only by the back-and-forth movement control mechanism in the form of integration with the piston rod, and when the plunger rod reaches the low-speed/high-speed switching position S, the hydraulic control mechanism is driven and the plunger rod is moved forward at a high speed by the cooperation of the back-and-forth movement control mechanism and the hydraulic control mechanism.

[0165] In the hybrid high-speed injection structure, the back-and-forth movement control mechanism is required only to comprise a function and capacity to move back and forward the piston rod integrated with the plunger rod or the piston rod alone, and therefore, it is possible to further reduce the size and weight compared to the conventional mechanism in which the entire hydraulic control mechanism is moved back and forward. As a result, the entire injection system is reduced in size and weight and the maintainability of the injection system is also improved.

[0166] As described above, the remarkable attainment of the reduction in size and weight and the improvement of maintainability also belongs to the structural characteristics of the device of the present invention.

[0167] When the filling of molten metal is completed, the forward movement of the plunger rod **108** almost comes to a stop and the head pressure increases; however, in the device of the present invention, the back-and-forth movement control mechanism and the hydraulic control mechanism are driven continuously until the increased pressure reaches a predetermined value.

[0168] When the increased pressure reaches a predetermined value, the high-speed valve **112** is closed, the hydraulic oil in the oil chamber **116**R in front is connected to a discharge channel, the back-and-forth movement control mechanism is driven continuously, and the piston rod **114** is moved forward as shown in FIG. **16**.

[0169] By the forward movement of the piston rod **114**, the hydraulic oil in the oil chamber **116**H at the rear is discharged from the discharge channel and at the same time, the pressure is applied continuously to the plunger rod **108**, and therefore, the plunger rod further moves forward and the head pressure increases further.

[0170] By continuously driving the back-and-forth movement control mechanism to move forward the piston rod **114** and by feedback-controlling the high-speed valve **112** in real time according to the setting of the injection pressure shown in FIG. **20**, and thus, the hydraulic oil in the oil chamber **116**H is stored in pressure accumulation in the accumulator **111** as

shown in FIG. **17**. After the cooling time is expired and until die cast molding is completed, a set pressure Pm is maintained by the torque control of the servo motor.

[0171] After a molded product is extracted, in order to discharge the solidified material that remains in the injection sleeve, the back-and-forth movement control mechanism is driven again and the piston rod **114** and the plunger rod **108** are moved forward in the form of integration as shown in FIG. **18**.

[0172] After the remaining solidified material is discharged, as shown in FIG. **19**, the hydraulic control mechanism is driven to supply hydraulic oil to the oil chamber **116** in front of the piston **113** and discharge hydraulic oil from the oil chamber **116**H behind the piston **113** and at the same time, the back-and-forth movement control mechanism is driven to move back the plunger rod **108** and the piston rod **114** to prepare for the next injection and put them on standby at the position shown in FIG. **13**.

[0173] When hydraulic oil is supplied to the oil chamber **116**R in front of the piston **113**, hydraulic oil is refilled from the pump **121** to compensate for the amount of decreased hydraulic oil.

[0174] As described above, a series of operations of the device of the present invention is explained based on the drawings, the increasing progress of the injection pressure based on the operation differs from the linear increasing progress of the injection pressure in the normal die cast molding, and therefore, this is shown in FIG. **20** in association with the operation shown in FIG. **13** to FIG. **19**. In FIG. **20**, the transition of the injection speed is also shown.

[0175] The injection speed in the device of the present invention follows the same transition of the injection speed in the normal die cast molding; however, the injection pressure increases in two steps different from the linear increasing progress in the normal die cast molding (refer to the dotted line in the figure). The present invention is characterized by this point also.

[0176] In the drive aspect of the back-and-forth movement control mechanism and the hydraulic control mechanism shown in FIG. **15**, when the filling of molten metal is completed, the forward movement of the plunger rod almost comes to a stop and the head pressure begins to increase, however, in the device of the present invention, the drive of the back-and-forth movement control mechanism and the hydraulic control mechanism is continued until the increased pressure reaches a predetermined value (refer to Pm' in FIG. **20**).

[0177] When the increased pressure reaches a predetermined value and a predetermined time elapses (refer to FIG. **20**), the high-speed valve **112** is closed to terminate the drive of the hydraulic control mechanism; however, the drive of the back-and-forth movement control mechanism is continued to move forward the piston rod **114**, as shown in FIG. **16**. By the forward movement of the piston rod **114**, the plunger rod **108** is loaded with pressure continuously while the hydraulic oil in the oil chamber **116**H at the rear is being discharged from the discharge channel, and therefore, the head pressure increases again and reaches a set pressure (refer to Pm in FIG. **20**).

[0178] As described above, in the device of the present invention, it is possible to increase the injection pressure to the set pressure Pm by program control, and therefore, a high-quality molded product can be manufactured with high yield.

[0179] 2) Next, the structure shown in FIG. **21** and its drive aspect are explained.

[0180] The structure shown in FIG. **21** is basically the same as the structure shown in FIG. **12**. In FIG. **21**, the same configurations as those shown in FIG. **12** are attached with the same numerals as those in FIG. **12**, however, part of the hydraulic circuit constituting the hydraulic control mechanism is omitted.

[0181] Differences in structure lie in that (i) the oil chamber **116**H behind the piston **113** is provided vertically with respect to the hydraulic cylinder **109** and in that (ii) a positioning member **122** to determine the position to which the plunger rod **108** is moved back is attached to the lower sidewall of the oil chamber **116**H.

[0182] Resulting from the differences in structure, the drive aspect also differs from the drive aspect in the structure shown in FIG. **12**, and therefore, its explanation is given below based on FIGS. **22** to **28**.

[0183] FIG. **22** shows an aspect of the device of the present invention immediately before a predetermined amount of molten metal Me is supplied into the injection sleeve through a supply gate (not shown) (see FIG. **21**) and injection is started. At this time, the plunger rod **108** has moved back to the last end set by the positioning member **122** in the hydraulic cylinder **109** and the piston rod **114** is on standby at the uppermost part of the oil chamber **116**H.

[0184] Next, as shown in FIG. **23**, the servo motor **119** is rotated according to the control signal to drive the ball screw mechanism **118** and move forward the piston rod **114** toward the lower part of the oil chamber **116**H.

[0185] At this time, the high-speed valve **112** linked to the accumulator **111** is closed and no hydraulic oil is supplied to the oil chamber **116**H from another system circuit, and therefore, the plunger rod **108** moves forward following the forward movement of the piston rod **114**. During the forward movement of the plunger rod **108**, hydraulic oil is discharged from the oil chamber **116**R in front.

[0186] The plunger rod **108** is not integrated with the piston rod **114** because of its structure; however, its operation can be cooperated with that of the piston rod **114** and as a result, the plunger rod **108** moves forward in the low-speed injection region in the injection sleeve at a predetermined speed of forward movement formed and maintained by the ball screw mechanism **118**.

[0187] Then, the distance of forward movement of the plunger rod **108** is detected by a displacement sensor (not shown) and until the front end of the plunger rod **108** reaches the position at which low-speed injection is switched to high-speed injection (the low-speed high-speed switching position S, refer to FIG. **14**), the plunger rod **108** is moved forward only by the ball screw mechanism **118** via the forward movement of the piston rod **114**.

[0188] The speed of forward movement of the plunger rod **108** may be maintained constant until the low-speed/high-speed switching position S is reached or may be accelerated in the middle of the movement. When the speed is accelerated in the middle of the movement, the rotation speed of the servo motor is increased.

[0189] When the plunger rod **108** reaches the low-speed/high-speed switching position S, the electromagnetic opening/closing mechanism M is activated to open the high-speed valve **112** and hydraulic oil is supplied from the accumulator **111** to the oil chamber **116**H at the rear to move forward the

plunger rod **108** at a high speed as shown in FIG. **24**. From the oil chamber **116**R in front, hydraulic oil is discharged.

[0190] Even after the plunger rod **108** has reached the low-speed/high-speed switching position S, the ball screw mechanism **118** is driven continuously to move forward the piston rod **114** in the downward direction to increase pressure of the hydraulic oil in the oil chamber **116**H. By this pressurization, it is possible to increase the speed of forward movement of the plunger rod **108** and fill the mold cavity with molten metal in the injection sleeve at a stable high speed. As a result, a high-quality molded product can be manufactured with high yield. This is the same as the drive aspect of the structure shown in FIG. **12**.

[0191] In other words, in the device of the present invention shown in FIG. **21**, the plunger rod **108** is not integrated with the piston rod **114** because of its structure, however, its operation can be cooperated with that of the piston rod **114** and as a result, the plunger rod **108** moves forward in the low-speed injection region in the injection sleeve at a predetermined speed of forward movement formed and maintained by the ball screw mechanism **118**.

[0192] After all, the drive aspect of the device of the present invention shown in FIG. **21** is the same as the drive aspect of the device of the present invention shown in FIG. **12** and similarly, the structure shown in FIG. **21** is one of hybrid high-speed injection structures.

[0193] When the filling of molten metal is completed, the forward movement of the plunger rod **108** almost comes to a stop and the head pressure increases; however, in the device of the present invention, the back-and-forth movement control mechanism and the hydraulic control mechanism are driven continuously until the increased pressure reaches a predetermined value.

[0194] When the increased pressure reaches a predetermined value, as shown in FIG. **25**, the high-speed valve **112** is closed, the hydraulic oil in the oil chamber **116**H at the rear is connected to the discharge channel, the back-and-forth movement control mechanism is driven continuously, and the piston rod **114** is moved forward.

[0195] Due to the forward movement of the piston rod **114**, pressure is applied continuously to the plunger rod **108** while the hydraulic oil in the oil chamber **116**R in front is being discharged from the discharge channel, and therefore, the plunger rod **108** further moves forward and the head pressure further increases.

[0196] The back-and-forth movement control mechanism is driven continuously to move forward the piston rod **114** and at the same time, the high-speed valve **112** is feedback-controlled in real time in accordance with the setting of injection pressure shown in FIG. **29** and thus the hydraulic oil in the oil chamber **116**H is stored in pressure accumulation in the accumulator **111**, as shown in FIG. **26**. The set pressure Pm is maintained by the torque control of the servo motor until the cooling time is expired and the die cast molding is completed.

[0197] After the molded product is extracted, in order to discharge the solidified material that remains in the injection sleeve, the back-and-forth movement control mechanism is driven again to move forward the piston rod **114**, as shown in FIG. **27**, and thereby the plunger rod **108** is moved forward.

[0198] After the remaining solidified material is discharged, the hydraulic control mechanism is driven, as shown in FIG. **28**, to discharge hydraulic oil from the oil chamber **116**H behind the piston **113** while supplying hydraulic oil to the oil chamber **116**R in front of the piston **113**, and thereby, the plunger rod **108** is moved back and at the same time, the back-and-forth movement control mechanism is driven to move back the piston rod **114** and put them on standby at the position shown in FIG. **22** for preparing the next injection, respectively.

[0199] When hydraulic oil is supplied to the oil chamber **116**R in front of the piston **113**, hydraulic oil is refilled from a pump **121** to compensate for the amount of decreased hydraulic oil.

[0200] A series of operations of the device of the present invention shown in FIG. **21** is explained as above based on the drawings. The injection pressure based on the operation is set in advance and increases by the feedback control in real time in accordance with the programmed increasing curve. This is shown in FIG. **29** in association with the operation shown in FIG. **23** to FIG. **28**. In FIG. **29**, the transition of injection speed is also shown.

INDUSTRIAL APPLICABILITY

[0201] As described above, according to the present invention, it is possible to manufacture a high-quality molded product with high yield. Further, the present invention realizes the further reduction in size and weight and is by far more excellent also in maintainability. Consequently, the present invention has high applicability in the die cast molding industry.

[0202] Next, the effects and working of the injection system in the above-described embodiments are explained. The following effects can be exhibited by the first embodiment of the present invention.

[0203] In the case of a hybrid injection system of a die casting machine in which a pressure-increasing step for increasing pressure of molten metal for injection pressure and a pressure-holding step for holding pressure of molten metal after the pressure-increasing step are performed electrically, at the pressure-holding step, it is possible to reduce the required maximum torque of a servo motor that drives a booster piston rod to avoid the need to keep a large current flowing at the pressure-holding step, prevent the occurrence of a large power loss, and reduce the motor size by providing a switching valve in a hydraulic circuit of the injection system to transfer the pressure in the injection cylinder head chamber to the booster piston rod chamber.

[0204] Due to this, it is possible to not only reduce the size of the injection system itself but also reduce the manufacturing cost of the injection system.

[0205] The following effects and working can be exhibited by the second embodiment of the present invention.

[0206] In this embodiment, it is possible to perform accumulator charge within the period of time of the molten metal supply process immediately before the injection process because the performance of the electrical booster to supply oil at a high flow rate and the amount of molten metal to be charged (filled) to the accumulator (ACC) is half that of. the conventional machine. That is, it is possible to shorten the time from the completion of charge to the start of high-speed injection, reduce the amount of leak from the circuit, and perform high-speed injection while the accumulator pressure is within a range of allowable values.

[0207] Due to this, the logic valve at the exit of the accumulator (ACC) can be eliminated and the pipe conduit resistance can be reduced considerably, and therefore, it is made easy to achieve the required injection performance and at the same time, the cost can be reduced.

[0208] In the above explanation, a configuration is explained, in which the booster piston rod **5** is driven by the servo motor l, a drive source, via a transmission mechanism configured by the ball nut gear **3**, the ball screw shaft **4**, etc.; however, the present invention is not limited to this, and the servo motor may be replaced with, for example, another electrical drive source well known to skilled persons in the art, such as an inverter-controlled AC motor, and further, the transmission mechanism may be another transmission mechanism well known to skilled persons in the art, such as a rack pinion type.

[0209] In addition, in the embodiments described above or shown in the accompanied drawings, a specific hydraulic circuit of the injection system is specified; however, the present invention is not limited to this, and those which are capable of driving the booster piston rod with a force corresponding to the product of the area of the booster piston rod and the pressure at the pressure-holding step are all included in the scope of the present invention.

[0210] The above-described embodiments are only examples of the present invention and the present invention is not limited to the embodiments but defined only by the description in claims and other embodiments can also be embodied.

[0211] While the invention has been described by reference to specific embodiments chosen for the purposes of illustration, it should be apparent that numerous modifications could be made thereto, by those skilled in the art, without departing from the basic concept and scope of the invention.

What is claimed is:

1. An injection system of a die casting machine, comprising:

an injection cylinder housing an injection piston for injecting molten metal, such as aluminum, into a mold of the die casting machine; and

an electric booster of hydraulic cylinder type housing a booster piston rod for performing injection molding by supplying pressurized hydraulic oil to a head chamber of the injection cylinder and pressing under pressure to move the injection piston, wherein

a head chamber of the electric booster communicates fluidly with the head chamber of the injection cylinder; and

the electric booster has a structure in which pressure of the hydraulic oil acts on a head area of the electric booster at a pressure-increasing step for increasing pressure of the molten metal and pressure of the hydraulic oil acts on a rod area of the electric booster at a pressure-holding step for holding pressure of the molten metal in an injection molding process.

2. The injection system according to claim **1**, wherein

communicating pipes for causing the head chamber of the injection cylinder to communicate fluidly with a rod chamber of the booster are provided and the communicating pipe is provided with a stop valve to cause hydraulic oil to flow intermittently.

3. The injection system according to claim **1**,

wherein the booster piston rod is driven to reciprocate by an electric motor.

4. The injection system according to claim **3**, wherein

the electric motor is a servo motor.

5. The injection system according to claim **1**, further comprising an injection piston accumulator for supplying hydraulic oil to the head chamber of the injection cylinder.

6. The injection system according to claim **1**, wherein

the rod chamber of the booster communicates fluidly with a tank and the communicating pipe that causes the rod chamber of the booster to communicate fluidly with the tank is provided with a stop valve.

7. The injection system according to claim **1**, wherein

a rod chamber of the injection cylinder communicates fluidly with the tank and a hydraulic oil supply inlet from a pump etc.

8. The injection system according to claim **1**, wherein

the booster further comprises a pressure detection sensor for detecting a head pressure, which is pressure in the head chamber of the injection cylinder.

9. An injection system of a die casting machine, comprising:

an injection cylinder housing an injection piston for injecting molten metal, such as aluminum, into a mold of the die casting machine;

an electric booster of a hydraulic cylinder type housing a booster piston rod for performing injection molding by supplying hydraulic oil to a head chamber of the injection cylinder and pressing under pressure to move the injection piston;

a piston accumulator formed so as to be capable of storing a predetermined amount of hydraulic oil at a predetermined maximum pressure and also capable of supplying hydraulic oil to the head chamber of the injection cylinder and pressing under pressure to move the injection piston, the piston accumulator performing injection molding in cooperation with the electric booster; and

a first switching valve provided on an exit side of the piston accumulator and capable of opening/closing a flow passage of hydraulic oil from an exit of the piston accumulator, wherein

the elimination of a logic valve is enabled, which would be provided originally at the exit of the piston accumulator in order to prevent leak of hydraulic oil through the first switching valve, by supplying hydraulic oil to the piston accumulator immediately before commencement of injection.

10. The injection system according to claim **9**, wherein

a head chamber of the electric booster communicates fluidly with the head chamber of the injection cylinder and also communicates fluidly with the exit of the piston accumulator;

a flow passage that causes the head chamber of the electric booster to communicate fluidly with the head chamber of the injection cylinder is provided with a second switching valve; and

the second switching valve connects fluidly, on one side of flow passage connections, to a flow passage that communicates with the head chamber of the electric booster and to a flow passage that communicates with the tank in which hydraulic oil is stored, and on the other side of the flow passage connections, connecting fluidly to a flow passage that communicates with the head chamber of the injection cylinder and to a flow passage that communicates with the piston accumulator.

11. The injection system according to claim **9**, wherein

supply of hydraulic oil to the piston accumulator is performed by the electric booster and hydraulic oil in the head chamber of the electric booster is pressed under pressure and supplied.

12. The injection system according to claim **9**, wherein

the booster is driven to supply hydraulic oil to the rod chamber of the injection cylinder in order to return the injection piston to an end part on a head side of the injection cylinder after an injection operation is completed.

13. The injection system according to claim **10**, further comprising a third switching valve provided in a flow passage that causes the rod chamber of the electric booster to communicate fluidly with the head chamber of the injection cylinder, wherein

the first switching valve connects fluidly, on one side of flow passage connections, to a flow passage that communicates with the piston accumulator and to a flow passage that communicates with the tank in which hydraulic oil is stored, and on the other side of the flow passage connections, connecting fluidly to a flow passage that communicates with the head chamber of the injection cylinder and to a flow passage that communicates with the rod chamber of the injection cylinder; and

a third switching valve connects fluidly, on one side of flow passage connections, to a flow passage that communicates with the tank and to a flow passage that communicates with the rod chamber of the electric booster, and on the other side of the flow passage connections, connecting fluidly to a flow passage that communicates with the rod chamber of the injection cylinder and to a flow passage that communicates with the head chamber of the injection cylinder.

14. The injection system according to claim **9**, wherein

a molten metal supply process is performed immediately before commencement of injection and supply of hydraulic oil to the piston accumulator is completed during the molten metal supply process.

15. The injection system according to claim **9**, wherein

the booster piston rod is driven to reciprocate by the electric motor.

16. The injection system according to claim **15**, wherein

the electric motor is a servo motor.

17. A hybrid high-speed injection system excellent in controllability, which is an injection system that drives a plunger to fill a mold cavity with molten metal, in which a piston rod controlled by a back-and-forth movement control mechanism is provided behind a hydraulic cylinder that incorporates a plunger rod controlled by a hydraulic control mechanism.

18. The hybrid high-speed injection system excellent in controllability according to claim **17**, wherein

the back-and-forth movement control mechanism is a ball screw mechanism.

19. The hybrid high-speed injection system excellent in controllability according to claim **18**, wherein

the ball screw mechanism is driven by a servo motor.

20. A hybrid high-speed injection control method for controlling filling of a mold cavity with molten metal by providing a piston rod controlled by a back-and-forth movement control mechanism behind a hydraulic cylinder that incorporates a plunger rod controlled by a hydraulic control mechanism and driving the hydraulic control mechanism and the back-and-forth movement control mechanism in conjunction with each other, the method comprising steps of:

(i) driving the back-and-forth movement control mechanism to move forward the plunger rod integrated with the piston rod until a low-speed/high-speed switching position is reached, and after its arrival,

(ii) driving the hydraulic control mechanism to move forward the plunger rod at a high speed in cooperation with the back-and-forth movement control mechanism.

21. The hybrid high-speed injection control method according to claim **20**, wherein

drive of the hydraulic control mechanism is feedback-controlled in real time according to an increasing curve up to a preset injection pressure.

* * * * *