Feb. 24, 1931. S. LEVINSON 1,794,022

CONVERTIBLE PRESSER FOOT

Filed July 27, 1927

Fig. 1.

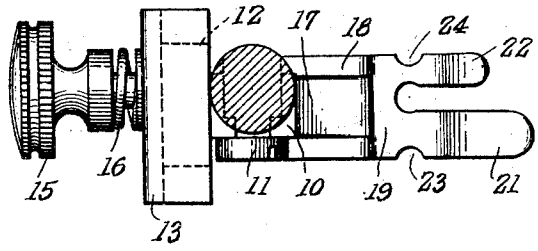

Fig. 2.

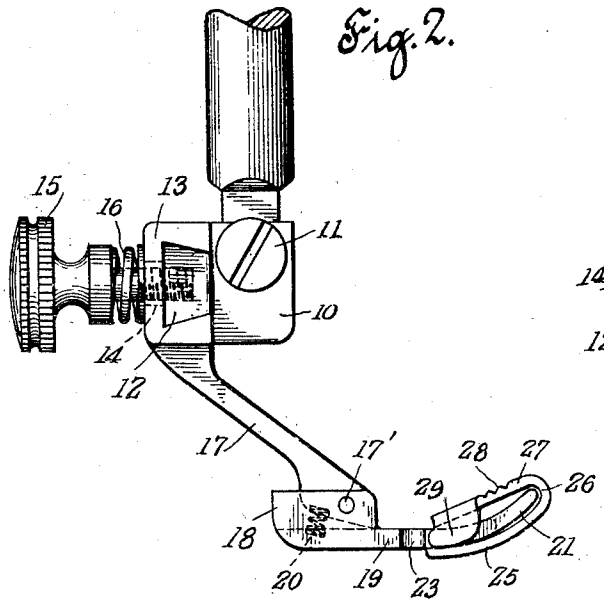

Fig. 3.

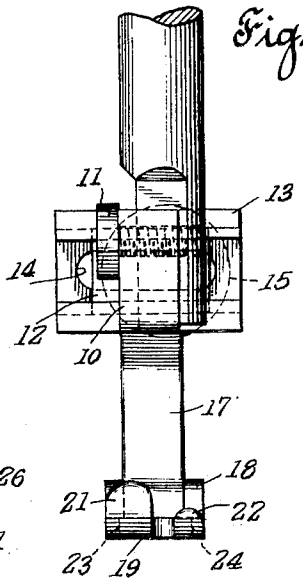

Fig. 4.

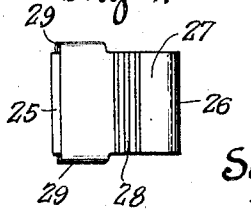

INVENTOR.
Sam Levinson
BY Leroy Freeman
ATTORNEY

Patented Feb. 24, 1931

1,794,022

UNITED STATES PATENT OFFICE

SAM LEVINSON, OF NEW YORK, N. Y.

CONVERTIBLE PRESSER FOOT

Application filed July 27, 1927. Serial No. 208,702.

This invention relates to improvements in sewing machines and more particularly to that portion of the machine which rests upon the surface of the material, being known commercially as a presser-foot.

Some form of such device must necessarily be used on all types of sewing machines and generally the machine used for factory purposes is provided with several different styles, applicable for plain sewing, beading, shirring and cording, both right and left, all of the several types being rigidly fixed upon the presser-foot bar without possibilities of adjustment.

Such a multiplicity of presser-foot elements are not only expensive but occupy considerable space while not in use and, due to being independent elements, occasionally become mislaid.

It is therefore one of the objects of the present invention to provide a presser-foot of a type that may be used for all ordinary purposes, by merely adjusting one part with relation to another, thereby obviating the use of a large number of independent elements.

It is a further feature to provide such devices in forms which may be readily engaged with a presser-foot bar of any ordinarry sewing machine and which may be used by an operator in an easy and effective manner.

It is another object to provide a presser-foot which is relatively inexpensive to construct and which may be changed in accordance with the work to be done in an easy manner and clamped rigidly when in the required adjustment.

These several objects are obtained by the novel construction and arrangement of parts hereinafter described, and shown in the accompanying drawings, forming a material part of this disclosure, and in which:—

Fig. 1 is a cross sectional view of a conventional sewing machine presser-foot bar showing the application of an embodiment of the invention and drawn to an enlarged scale.

Fig. 2 is a side elevational view of the same, showing an additional feature as used in shirring.

Fig. 3 is a front elevational view of the device in its plain form as shown in Fig. 1.

Fig. 4 is a top plan view of the shirring element in detail.

The device as shown consists of a block 10 recessed to suit the reduced, flattened lower end of a presser-foot bar and held rigidly thereto by a clamp screw 11 threaded into the bar.

Extending integrally from the rear of the block 10 is a horizontal guide bar 12, of dovetail cross-section, on which is engaged a slide 13 having in its outer face a longtudinal slot 14 through which passes a clamp screw 15 threaded into the guide bar 12 and provided with a knurled head for manual operation; a compression spring 16 may be interposed between the head of the screw and surface of the slide, thus retaining the slide in frictional contact with the guide bar.

A forwardly and downwardly reaching arm 17 extends integrally from the lower side of the slide 13 and may be extended to act as a rigid laterally adjustable presser-foot.

It is preferable however to provide a pivot 17′ at the end of the arm, the pivot being used to attach the upstanding portions 18 of a presser-foot 19, and a spring 20 is applied between the lower end of the arm and the bottom wall of the presser-foot in which the arm is received.

The presser-foot has the usual upturned element 21 on one side and a shorter element 22 on the opposite side, there being a space for the needle therebetween.

In the presser-foot members 21—22 are notches 23 and 24 respectively, which, if it is desired to use the presser-foot for cording, may be shifted to register with the needle and the sewing machine so adapted to perform the operation of cording with the cord at the right or left side of the seam as sewn, as may be desired.

The pivoted presser-foot in many classes of work will be found advantageous, such for instance as traversing a seam of considerable thickness that might interfere with the free action of a rigid presser-foot, causing the material to gather undersirably.

In the operation of shirring the presser-foot is substantially prolonged or extended toward the front by being entered into a socket having an upwardly curved lower surface 25 bent to provide a smooth bight 26, thereafter being turned reentrantly, and downwardly constituting a plate 27 which may be provided with corrugations 28 convenient for the operation of removal or application.

Extending from the plate 27, on each side, are lateral, downwardly bent lugs 29 to engage the sides of the presser-foot elements 21—22 and maintain the shirring device in its proper position.

From the foregoing it will be seen that this simple device provides for all ordinary sewing operations as herein enumerated and that it possesses the further advantage of being substantially of simple unitary construction.

Although the foregoing is descriptive of the best known embodiment of the invention it will be apparent that minor modifications may be made without departing from the scope of the invention as expressed in the accompanying claims.

Having thus described my invention, what I claim as new and desire to secure by Letters Patent, is:—

1. A presser-foot for sewing machines comprising a block to rigidly engage a presser-foot bar, a horizontal guide of dovetail cross section at the rear of said block, a slide complementary to and movable on said guide, means for adjustably clamping the slide to said guide, an arm on said slide, and a presser-foot pivoted to said arm, said presser-foot having notches in its sides and a central slot, all of which are registrable selectively with the axis of the sewing machine needle.

2. The combination with the presser-foot bar of a sewing machine, of a block recessed for attachment to the presser-foot bar, said block having on its rear surface a guide bar of dove-tail cross section, a slide complementary to and movable on said guide bar, a longitudinal slot in the rear wall of said slide, a clamp screw passing through said slot and threaded into said guide bar, a spring interposed between the head of the screw and the rear surface of the slide whereby the slide is held in adjusted position by frictional contact with the guide bar, and a presser-foot extending downwardly from said slide.

Signed at New York, county of New York and State of New York, this 25 day of June, 1927.

SAM LEVINSON.