2 Sheets—Sheet 1.

J. MORRISON.

Reverberating Furnace.

No. 196,246. Patented Oct. 16, 1877.

Fig. 1.

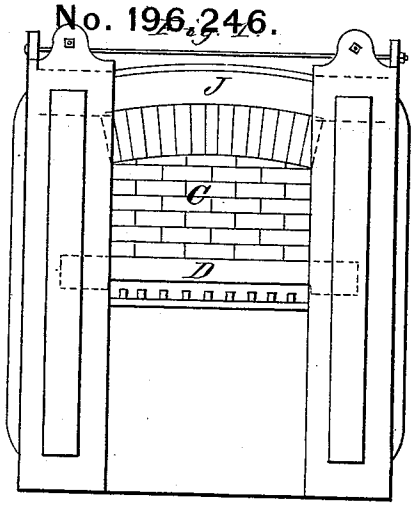

Fig. 2.

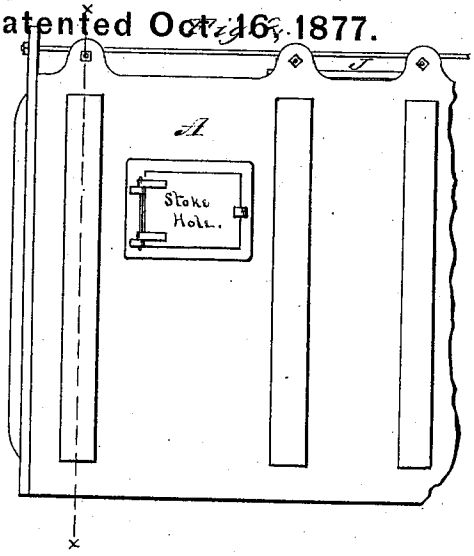

Fig. 3.

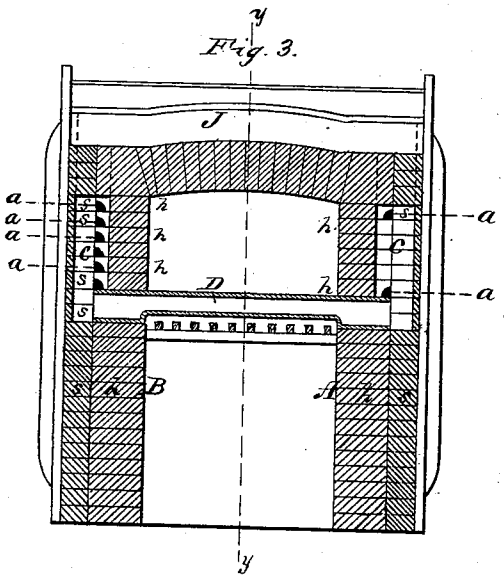

Fig. 4.

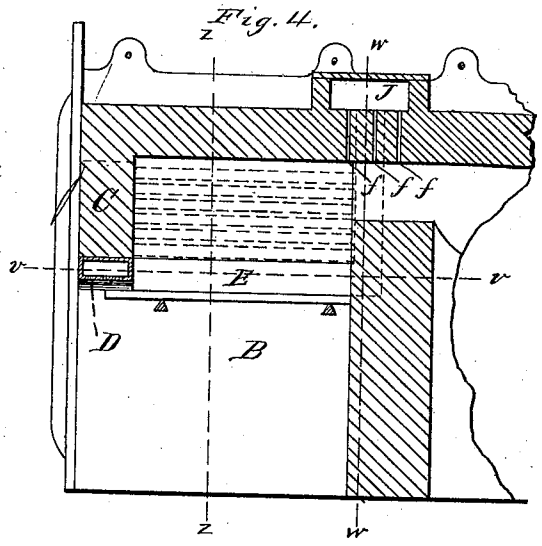

Witnesses.
William B. Cookson
G. Smith

John Morrison, Inventor.
By Connolly Bros & McRae
Attorneys.

J. MORRISON.

Reverberating Furnace.

No. 196,246. Patented Oct. 16, 1877.

Fig. 5

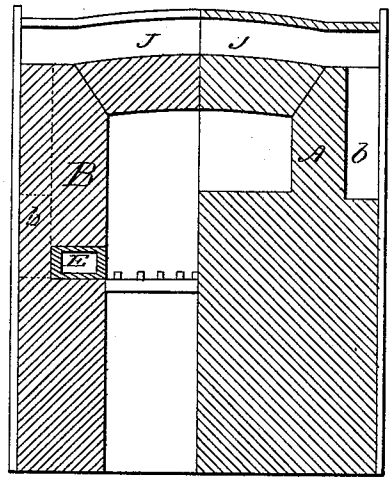

Fig. 6

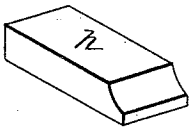

Fig. 7

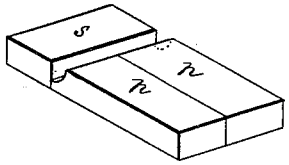

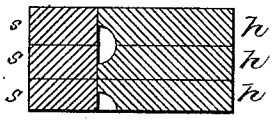

Witnesses

Jos. P. Connolly

A. A. Connolly

By

Inventor

John Morrison

Connolly, Bowen & Tighe

Attorneys

UNITED STATES PATENT OFFICE.

JOHN MORRISON, OF PITTSBURG, PENNSYLVANIA.

IMPROVEMENT IN REVERBERATING FURNACES.

Specification forming part of Letters Patent No. **196,246,** dated October 16, 1877; application filed May 9, 1877.

To all whom it may concern:

Be it known that I, JOHN MORRISON, of Pittsburg, in the county of Allegheny and State of Pennsylvania, have invented certain new and useful Improvements in the Construction of Reverberatory Furnaces; and I do hereby declare the following to be a full, clear, and exact description of the invention, such as will enable others skilled in the art to which it pertains to make and use it, reference being had to the accompanying drawings, which form part of this specification, in which—

Figure 1 is an end elevation. Fig. 2 is a side elevation of the fire end. Fig. 3 is a section on line *x x* of Fig. 2. Fig. 4 is a longitudinal section on line *y y* of Fig. 3. Fig. 5 is a double section on lines *z z* and *w w* of Fig. 4. Figs. 6 and 7 show form and arrangement of bricks.

This invention relates to metallurgic reverberatory furnaces; and consists in the novel construction, arrangement, and combination of parts for the purpose of promoting the duration of the structure and the heating of air to feed the furnace, all as hereinafter fully described and specifically claimed.

The drawings represent the common type of reverberatory furnaces, in which A designates the front wall, or the wall in which are the stoke and work holes, and B the back wall, both built up of the usual "headers" and "stretchers." In these, or either of them, I construct a series of small horizontal flues, *a*, delivering the air into a gathering-flue, *b*, which conducts the air to a chamber, J, on the roof, which feeds the furnace through a series of transverse slits, *f*, in the crown.

The flues *a* receive air from a vertical distributing-flue, *c*, at the end of the wall, said flue receiving air from below or at the end plates.

In constructing the flues *a*, an admirable result is effected by the use of a header-brick of a peculiar form. It is substantially a complete brick, *h*, Figs. 9 and 10, minus one of the end edges, leaving a part of the brick to extend its full length. By laying the bricks side by side and facing them with the stretchers *s*, as in Figs. 3 and 10, the desired passages are secured, and at the same time a practically solid wall is obtained, having all the strength and durability attainable in such structures, requiring no skill to construct.

The flues are determined in size by the thickness of the header, (generally two and a half inches,) and the small area of each necessarily has a more intense heating effect than if the entire body of air passed in a solid column.

The small flues *a a* are shown as formed in the walls of the fire-chamber, whereby the air passing through said flues is heated.

The lintels and chills shown in several figures of the drawing constitute no part of this application, and, being the subject of a separate application filed by me, are herein disclaimed.

Having described my invention, I claim as new and desire to secure by Letters Patent—

The improved metallurgic furnace hereinbefore described, having constructed in its walls, at the fire-chamber, the air-distributing flue *c* and the series of small intensifying flues *a*, and having the chamber J extending transversely across its crown, said chamber having communication with the flues *a* through the gathering-flues *b*, and with the furnace through the cumulative delivery-slits *f f*, all the several parts being constructed and combined substantially as and for the purpose described.

In testimony that I claim the foregoing I have hereunto set my hand this 5th day of May, 1877.

JOHN MORRISON.

Witnesses:
JOHN FERGUSON,
THOS. J. MCTIGHE.