May 23, 1967 E. FEZER ETAL 3,321,128

CIRCULAR PISTON MACHINE

Filed Dec. 16, 1965

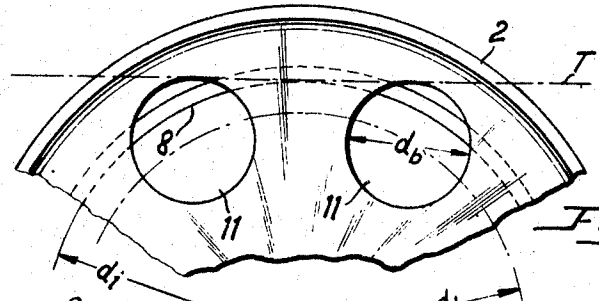

Fig. 2.

Fig. 1.

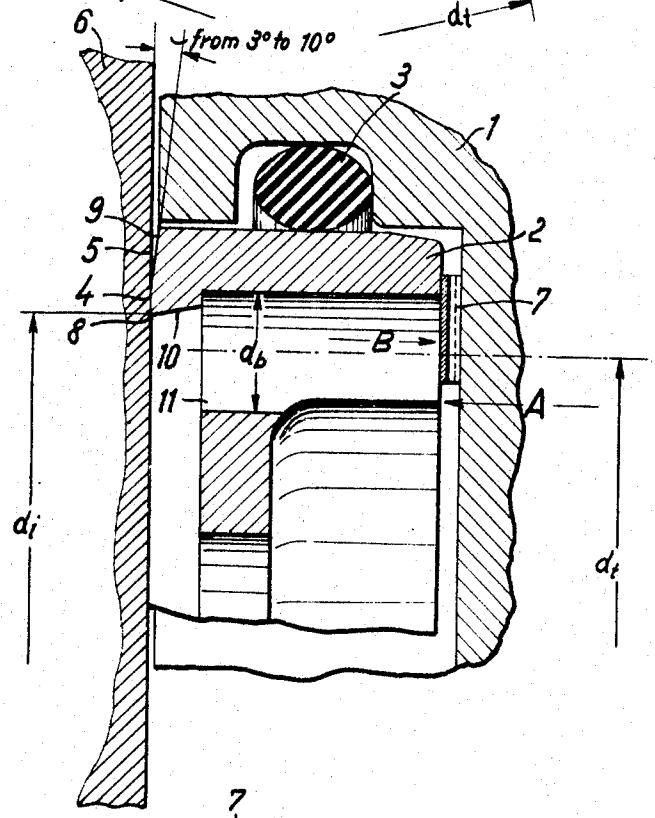

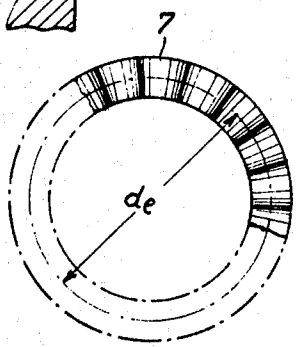

Fig. 3.

Fig. 4.



Inventors:
Eberhard Fezer
Oskar Simon

By Walter Becker.

United States Patent Office 3,321,128
Patented May 23, 1967

3,321,128

CIRCULAR PISTON MACHINE

Eberhard Fezer, Essen-Bredeney, and Oskar Simon, Essen, Germany, assignors to Beteiligungs- und Patentvewaltungsgesellschaft mit beschrankter Haftung, Essen, Germany

Filed Dec. 16, 1965, Ser. No. 514,317
Claims priority, application Germany, Dec. 19, 1964, B 79,811
8 Claims. (Cl. 230—145)

The present invention relates to a circular piston machine, especially internal combustion engine, having a stationary housing the inner surface of which has the cross-sectional shape of a multi-lobe epitrochoid. A machine of this type has vertical side walls which together with said housing confine an inner chamber through which in a direction perpendicular to said side walls there extends a horizontal eccentric shaft the eccenter of which rotatably supports a multi-corner piston. The end faces of said piston are equipped with axial sealing means comprising an annular oil seal and an end face seal.

Circular piston machines of the above mentioned known type have the drawback that the sealing of the oil containing chambers by means of the heretofore customary annular oil seal is not fully satisfactory so that oil leakage is unavoidable.

It is, therefore, an object of the present invention to provide a circular piston machine of the above mentioned general type which will overcome the drawbacks referred to above.

It is another object of this invention to provide a circular piston machine of the general type set forth above, which will assure a proper seal between the side walls of the machine and the piston.

It is a further object of this invention to provide a circular piston machine as set forth in the preceding paragraph, which will comprise means adapted to prevent oil at the sealing surface between the piston and the side walls of the machine from accumulating to any undesired extent.

These and other objects and advantages of the invention will appear more clearly from the following specification in connection with the accompanying drawing, in which:

FIG. 1 shows a section through a portion of the oil seal between the piston and the side walls of a machine according to the invention.

FIG. 2 is a view seen in the direction of the arrow A of FIG. 1.

FIG. 3 shows a view of an annular spring used in connection with the arrangement of FIG. 1 and seen in the direction of the arrow B of FIG. 1.

FIG. 4 is a cross section of a developed portion of the spring of FIG. 3.

The sealing arrangement according to the present invention is characterized primarily in that between the oil seal which is non-rotatably arranged in a side wall portion of the machine and the said side wall portion there is arranged an annular spring the effective diameter of which substantially equals the diameter of the inner edge of that sealing surface of the seal which slidably engages the adjacent piston surface. The oil seal is provided with openings the outer contour of which extends from the inner edge of the sealing surface parallel to the eccentric shaft or in a direction away therefrom. The location, size and number of said openings is so selected that the inner edge of the sealing surface at best engages the outer tangent of the respective two adjacent openings. The openings of said oil seal have their discharge mouth located on that side of said seal which is remote from said piston.

According to a further development of the present invention, it is suggested for purposes of improving the oil discharge from the sealing area, that the inner edge of the annular sealing surface of the oil seal is in axial direction followed by an inner surface which conically flares with increasing distance from the inner edge of the annular sealing surface. As a result of this design, each point of the inner edge of the annular sealing surface has coordinated therewith an adjacent axis-remote point which means that from each point of the inner edge there exists a drop in outward direction.

According to a further improvement of the sealing effect, it is suggested in conformity with the present invention that the outer edge of the annular sealing surface of the oil seal is in radial direction toward the outside followed by a wedge surface the radial extension of which is at least three times the radial extension of the sealing surface, said wedge surface forming an angle of approximately 5° with the surface engaged by said seal. In this way, during a radial relative movement between the annular sealing surface and the seal engaged thereby for sealing purposes, a wedging effect is exerted upon any oil below the wedging surface whereby the oil is returned to the space within the sealing surface. The inner edge of the sealing surface acts in the manner of a stripper and enhances this effect.

Referring now more specifically to the drawing, the side wall portion 1 of the circular piston machine, which incidentally may, for instance, be of the design disclosed in U.S. Patent No. 3,208,666, has arranged therein an oil seal 2 according to the present invention. In radial direction, said oil seal 2 is elastically connected to the side wall portion 1 through the intervention of a sealing ring 3. Oil seal 2 has its annular sealing surface 4 in engagement with the contact surface 5 of circular piston 6. The pressure at which the oil seal 2 is pressed in axial direction against the contact surface 5 is produced by an annular spring 7 which expediently is designed as an ondulated annular spring. The effective diameter d_e of spring 7 approximately equals the diameter d_i of the inner edge 8 of the annular sealing surface 4. Annular sealing surface 4 is in the direction toward the outside followed by a wedging surface 9 which forms an acute angle with the contact surface 5. Toward the inside from inner edge wedge 8, annular sealing surface 4 is followed by a conically flaring inner surface 10.

Oil seal 2 is provided with a number of bores 11 which extend substantially parallel with regard to the eccentric shaft of the machine, said bores being uniformly distributed over a pitch diameter d_t. If the number of bores 11 is represented by the letter n and if the diameter of said bores is represented by the letter d_b, the relationship between size and number of bores 11 is expressed by the formula

$$d_t \times \cos 180/n + d_b = d_i$$

so that the inner edge 8 of sealing surface 4 at best touches the outer tangent to the respective two adjacent bores 11.

Thus, while various types of material may be used for the oil seal 2 and the sealing ring 3, advantageously the oil seal is made of special grey iron and the sealing ring is made of rubber.

As will be evident from the above, a sealing engagement according to the present invention furnishes a particularly good sealing effect because the spring force of the annular spring which acts substantially directly upon the sealing surface and over the entire length thereof will, in cooperation with the oil seal which is rather elastic in view of the openings, bring about a proper engage-

ment of the sealing surface with the respective adjacent contact surface of the piston, On the other hand, the arrangement of the openings for the discharge of the oil will assure that the oil collected within the range of the inner edge of the sealing surface will not unduly accumulate but will be discharged in any position of operation.

It is, of course, to be understood that the present invention is, by no means, limited to the particular arrangement shown in the drawing but also comprises any modifications within the scope of the appended claims.

What we claim is:

1. A circular piston machine, especially internal combustion engine having housing means including side wall means, an eccentric shaft rotatably supported by said housing means, and a multi-corner piston rotatably supported by said eccentric shaft, which comprises: annular oil-sealing means respectively arranged between said side wall means and the respective adjacent end faces of said piston and having one end face in sealing engagement with the respective adjacent end face of said piston, annular spring means interposed between each of said side wall means and the respective adjacent other end face of said sealing means while continuously urging said one end face of said sealing means into sealing engagement with the respective adjacent end face of said piston, said oil-sealing means being provided with a plurality of bores having their axes parallel to the longitudinal extension of said annular oil-sealing means, the position and the magnitude and the number of said bores being such that the inner edge of that portion of said one end face of said annular oil-sealing means at best touches the outer tangent on two adjacent bores.

2. A circular piston machine according to claim 1, in which the effective diameter of said annular spring means approximately equals the inner diameter of said one end face of said annular oil-sealing means.

3. A circular piston machine according to claim 1, which includes an elastic sealing ring surrounding an outer peripheral portion of said annular oil-sealing means and interposed between and sealingly engaging the outer peripheral portion of said annular oil-sealing means and an adjacent portion of said side wall.

4. A circular piston machine, especially internal combustion engine having housing means including side wall means, an eccentric shaft rotatably supported by said housing means, and a multi-corner piston rotatably supported by said eccentric shaft, which comprises: annular oil-sealing means respectively arranged between said side wall means and the respective adjacent end faces of said piston and having one end face in sealing engagement

with the respective adjacent end face of said piston, an elastic sealing ring surrounding an outer peripheral portion of said annular oil-sealing means and interposed between and sealing engaging the outer peripheral portion of said annular oil-sealing means and an adjacent portion of said side wall, annular spring means interposed between each of said side wall means and the respective adjacent other end face of said sealing means while continuously urging said one end face of said sealing means into sealing engagement with the respective adjacent end face of said piston, said oil-sealing means being provided with a plurality of bores having their axes parallel to the longitudinal extension of said annular oil-sealing means, said bores being cylindrical or flaring from said one end face of said oil-sealing means in a direction away therefrom and opening to said other end face, the position and the magnitude and the number of said bores being such that the inner edge of that portion of said one end face of said annular oil-sealing means at best touches the outer tangent an two adjacent bores.

5. A circular piston machine according to claim 1, in which said annular oil-sealing means adjacent its one end face has an inner peripheral portion flaring from said one end face in a direction away therefrom.

6. A circular piston machine according to claim 1, in which a radially inner portion of said one end face is in sealing engagement with the respective end face of said piston while a radially outer portion of said sealing means adjacent to said radially inner portion is flaring radially outwardly in a direction away from the respective adjacent piston while confining therewith an angle within the range of from 3° to 10°.

7. A circular piston machine according to claim 6, in which the radially outwardly flaring extension of said sealing means is at least three times the radial extension of said radially extending inner portion.

8. A circular piston machine according to claim 1, in which the inner diameter of said annular oil-sealing means at its piston engaging surface is expressed by the formula $d_i = d_t \times \cos 180/n + d_b$, in which d_i indicates said inner diameter, n indicates the number of said bores, d_b indicates the diameter of each of said bores and d_t indicates the pitch circle on which said bores are located.

References Cited by the Examiner

UNITED STATES PATENTS

3,171,590	3/1965	Bentele et al.	123—8 X
3,176,910	4/1965	Bentele	230—145

ROBERT M. WALKER, *Primary Examiner.*