(12) INTERNATIONAL APPLICATION PUBLISHED UNDER THE PATENT COOPERATION TREATY (PCT)

(19) World Intellectual Property Organization
International Bureau

(43) International Publication Date
16 April 2009 (16.04.2009)

PCT

(10) International Publication Number
WO 2009/048209 A1

(51) International Patent Classification:
A47C 27/20 (2006.01) *A47C 27/15* (2006.01)
A47C 27/14 (2006.01)

(21) International Application Number:
PCT/KR2008/001709

(22) International Filing Date: 27 March 2008 (27.03.2008)

(25) Filing Language: English

(26) Publication Language: English

(30) Priority Data:
10-2007-0101660 9 October 2007 (09.10.2007) KR
10-2007-0107409 24 October 2007 (24.10.2007) KR
10-2007-0141824 31 December 2007 (31.12.2007) KR

(71) Applicant and
(72) Inventor: **AN, Jung Ho** [KR/KR]; 227-4, Jangpyeong-ri, Daewol-myeon, Icheon-si, Gyeonggi-do 467-853 (KR).

(74) Agent: **CHUNG, Tae Ryoun**; 12th Fl, Hyundai Jeonwon Officetel 1589-7, Socho-dong, Socho-gu, Seoul 137-873 (KR).

(81) Designated States *(unless otherwise indicated, for every kind of national protection available)*: AE, AG, AL, AM, AO, AT, AU, AZ, BA, BB, BG, BH, BR, BW, BY, BZ, CA, CH, CN, CO, CR, CU, CZ, DE, DK, DM, DO, DZ, EC, EE, EG, ES, FI, GB, GD, GE, GH, GM, GT, HN, HR, HU, ID, IL, IN, IS, JP, KE, KG, KM, KN, KP, KZ, LA, LC, LK, LR, LS, LT, LU, LY, MA, MD, ME, MG, MK, MN, MW, MX, MY, MZ, NA, NG, NI, NO, NZ, OM, PG, PH, PL, PT, RO, RS, RU, SC, SD, SE, SG, SK, SL, SM, SV, SY, TJ, TM, TN, TR, TT, TZ, UA, UG, US, UZ, VC, VN, ZA, ZM, ZW.

(84) Designated States *(unless otherwise indicated, for every kind of regional protection available)*: ARIPO (BW, GH, GM, KE, LS, MW, MZ, NA, SD, SL, SZ, TZ, UG, ZM, ZW), Eurasian (AM, AZ, BY, KG, KZ, MD, RU, TJ, TM), European (AT, BE, BG, CH, CY, CZ, DE, DK, EE, ES, FI, FR, GB, GR, HR, HU, IE, IS, IT, LT, LU, LV, MC, MT, NL, NO, PL, PT, RO, SE, SI, SK, TR), OAPI (BF, BJ, CF, CG, CI, CM, GA, GN, GQ, GW, ML, MR, NE, SN, TD, TG).

Published:
— *with international search report*

[Continued on next page]

(54) **Title:** A MATTRESS

[Fig. 1]

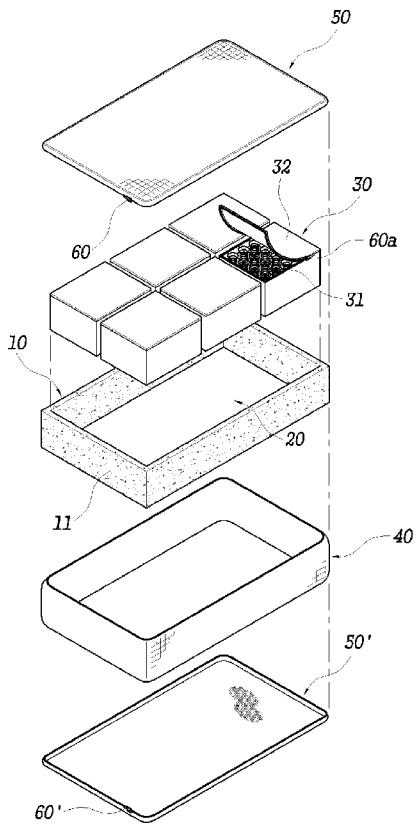

(57) **Abstract:** A bed mattress is provided for employing a plurality of cushion elements (30) to be arranged in different portions of the mattress divided corresponding to the user's body parts and have appropriate elasticity for the corresponding part of the user's body, which comprises a mattress frame (10) with an enclosing wall (11) for providing a mounting space (20) therein; a plurality of cushion elements (30) disposed in the mounting space (20) and forming a mattress body together with the mattress frame (10); a pad covering the periphery of the mattress body; and upper (50) and lower (50') cover pads with outer edges fastened (60, 60') respectively to the top and bottom edges of the side pad to enclose the upper and lower surface of the mattress body.

WO 2009/048209 A1

— *with amended claims*

Description

A MATTRESS

Technical Field

[1] The present invention relates to a mattress, in particular, to a mattress with a frame including a plurality of cushion elements with different elasticity, which make it possible to selectively employ cushion elements appropriate for the user's respective body parts.

Background Art

[2] It is not seldom for the conventional bed mattresses to be discarded as a whole, rather than to be repaired, when the cushion member has lost the elasticity, which varies according to the materials used, the accessories such as side pads and upper/lower cover pads are wholly or partially damaged, soiled or discolored, and so on. That's because all parts of the mattresses, namely the cushion member and the accessories, are integrated into one single body, making it not easy to repair a part or parts of the mattress.

Disclosure of Invention

Technical Problem

[3] Further, the conventional mattresses have almost the same elasticity over all the regions or areas thereof and thus, the degrees of compression are different depending on the body parts, heavy or light, when a user lies in the bed, making the mattress or its cushion member compressed under the weights of the users respective body parts, but the curve on the mattress made by the users body weight is not the same as the contour of the users body and thus some body parts, such as the neck and the waist, are not in contact with and supported by the mattress, but are kept apart off the mattress. This results in the user being unable to take or maintain his or her comfortable and relaxing posture lying on the mattress because of tension in the muscles of those parts.

[4] A mattress is disclosed in the Korean Utility Model No. 337232 designed to solve the above described problems, in which the mattress may be longitudinally divided into several portions corresponding to the body parts and having cushions of spring structures with different elasticity therein. The user, however, must change the entire mattress, if damaged, as the integral structure of the mattress makes its partial repair or change of a part or parts difficult or even impossible.

[5] Further, in case of the double bed, it is not sufficient for making a bed mattress comfortable to both of the male and female users, who have different physical sizes and constitutions, to provide the spring structures in different portions of the mattress with the varying elasticity.

Technical Solution

[6] It is an object of the present invention to provide a mattress that allows its user to have a comfortable and relaxing sleep thereon by employing a plurality of cushion elements to be arranged in different portions of the mattress divided corresponding to the user's body parts and have appropriate elasticity for the corresponding part of the user's body in consideration of the age, gender, height, weight and other body constitutions of the user, in order to solve the problems of the conventional mattress as described above.

[7] It is another object of the present invention to provide a mattress having replaceable parts for easy maintenance of the bed and mattress and use for a prolonged period of time.

[8] According to an aspect of the present invention, a mattress comprises:

[9] a mattress frame with an enclosing wall for providing a mounting space therein;

[10] a plurality of cushion elements disposed in the mounting space and forming a mattress body together with the mattress frame;

[11] a side pad covering the periphery of the mattress body; and

[12] upper and lower cover pads with outer edges fastened respectively to the top and bottom edges of the side pad to enclose the upper and lower surfaces of the mattress body.

[13] According to another aspect of the invention, the mattress frame comprises a longitudinal division wall for dividing the mounting space into a pair of parallel divisional mounting spaces.

[14] According to still another aspect of the present invention, the mattress further comprises a lower cushion member with the same periphery as the mattress body comprising a mattress frame with or without one or more longitudinal or transverse division walls and a plurality of cushion elements as described above.

Advantageous Effects

[15] Cushion elements of the mattress according to the present invention may be selected to have different elasticity, depending on the regions or areas of the mattress corresponding to the body parts and constitutions and the taste of the user of the bed provided with the mattress.

[16] Further, various parts of the mattress such as cushion elements and side, upper and lower cover pads may be detached for change or repair, leading to extended or prolonged mattress life.

Brief Description of the Drawings

[17] The present invention will be described in detail with reference to the accompanying drawings, in which:

[18] FIG. 1 is an exploded perspective view of a mattress according to a first embodiment of the present invention,

[19] FIG. 2 is a side cross-sectional view of a part of the mattress shown in FIG. 1,

[20] FIG. 3 is a side cross-sectional view of a combination of an upper cover pad and an auxiliary cushion element of the mattress shown in FIG. 2,

[21] FIG. 4 is a side cross-sectional view of another example of the cushion element used in the mattress shown in FIG. 1,

[22] FIG. 5 is an exploded perspective view of a mattress according to a second embodiment of the invention,

[23] FIG. 6 is a front cross-sectional view of a mattress shown in FIG. 5,

[24] FIG. 7 is an exploded perspective view of a mattress according to a third embodiment of the invention,

[25] FIG. 8 is a side cross-sectional view of the mattress shown in FIG. 7,

[26] FIG. 9 is a side cross-sectional view of a modification of the mattress shown in FIG. 7,

[27] FIG. 10 is a side cross-sectional view of another modification of the mattress shown in FIG. 7,

[28] FIG. 11 is an exploded perspective view of a mattress according to a fourth embodiment of the invention,

[29] FIG. 12 is an exploded perspective view of a mattress according to a fifth embodiment of the invention,

[30] FIG. 13 is a side cross-sectional view of the mattress shown in FIG. 12,

[31] FIG. 14 is a side cross-sectional view of a mattress with two divisional mounting spaces of the mattress according to a modification of the first embodiment of the present invention, up and down in the longitudinal direction of the mattress,

[32] FIGS. 15 is a side cross-sectional views of the mattress according to another modification of the first embodiment of the present invention, having four divisional mounting spaces,

[33] FIG. 16 is a side cross-sectional view of another modification of the mattress according to the first embodiment of the invention, having six divisional mounting spaces,

[34] FIG. 17 is a side cross-sectional view of still another modification of the mattress according to the first embodiment of the invention, having eight divisional mounting spaces,

[35] FIG. 18 is a side cross-sectional view of a modification of the mattress according to the third embodiment of the invention, having nine divisional mounting spaces,

[36] FIGS. 19 to 21 are partial cross-sectional views of other examples of the enclosing wall and the division wall used in the mattress according to the present invention.

[37] FIG. 22 is a partially exploded perspective view of a mattress body of a modification of the mattress according to the fourth embodiment of the present invention, and

[38] FIG. 23 is a partial side cross-sectional view of the mattress body shown in FIG. 22.

Mode for the Invention

[39] FIG. 1 is an exploded perspective view of a mattress according to a first embodiment of the invention, FIG. 2 is a side cross-sectional view of the mattress shown in FIG. 1, FIG. 3 is a side cross-sectional view of a combination of an upper cover pad and an auxiliary cushion element of the mattress shown in FIG. 2, and Fig. 4 is a side cross-sectional view of another example of the cushion element used in the mattress shown in Fig 1.

[40] The mattress according to first embodiment of the present invention comprises a mattress frame 10 having a rectangular enclosing wall 11 made of elastic urethane foam for providing a mounting space therein, six cushion elements 30 arranged in two rows in the mounting space and forming a mattress body together with the frame 10, a pair of auxiliary cushion elements 30 each comprising a bag 32 and a flat urethane foam 33 and disposed on or beneath the mattress body, a side pad 40 covering the periphery of the mattress body, and upper and lower cover pads 50, 50' respectively covering the auxiliary cushion elements 30 and fastened to the upper and lower ends of the side pad 40 by fasteners 60, 60' provided at the edge thereof.

[41] The cushion element 30 is a spring structure comprising a plurality of coil springs 31 packed in a cubical fabric bag 32 provided with a fastener 60a, while the auxiliary cushion elements 30 are respectively combined with and enclosed in the upper or lower cover pad 50, 50' and protective sheets 51 provided with a fastener 60a (see FIG. 2). Further, the bag 32 may not be used and the auxiliary cushion element 30 may be disposed only on the mattress body, or may not be employed at all.

[42] The rectangular wall 11 of the frame 10 may be of an integrally formed body or formed with four bar elements by bonding both ends of one to corresponding ends of the other, in which a bonding process is additionally needed and the bonded portions may be easily broken due to possible poor bonding quality or heavy load of long continuance. Therefore, preferably the frame is integrally formed or molded, or provided with thick and/or firm bonded portions. The outer sides of the cushion elements 30 disposed in two rows in the enclosing wall 20 are in close contact with the inner wall surfaces of the wall or the outer sides of the adjacent cushion elements so that they can function as one single cushion elements. Further, as described above, the cushion elements 30 may be made to have different elasticity, if needed, and parts of the auxiliary cushion elements 30 may also be made to have different elasticity.

[43] The cushion elements 30 shown are six in two rows in FIGs. 1 and 2, while the

mattress may desirably have four to eighteen cushion members 30 disposed in two rows.

[44] For a double bed, to be used by a male and a female, a husband and a wife, or an adult and a child, one side of the mattress is desirably provided with cushion elements 30 having lower elasticity and/or narrower widths than those disposed at the other side.

[45] In this embodiment, the spring structures are illustrated to use the coil springs 31, but the materials of the cushion elements 30 are not limited thereto and, as shown in FIG. 4, a spring structure may employ pocket springs 31, instead of the coil springs packed in a bag 32 provided with a fastener 60b.

[46] Further, similar to the frame, the cushion elements 30 may be formed of elastic sponge, such as urethane foam, and the auxiliary cushion elements 30 may also be formed of the same material as the cushion element, or natural or synthetic rubbers.

[47] FIGs. 5 and 6 are an exploded perspective view and a front cross-sectional view of a mattress according to a second embodiment of the present invention, respectively, in which a longitudinal division wall 21 of the same material as a mattress frame 10 is provided inside the frame 10 to divide a mounting space 20 into two parallel divisional mounting spaces 20.

[48] The mattress shown in FIGs. 5 and 6 may be suitable for a king-sized bed or a double bed. Further, because an outer side of each cushion element 30 is in contact with the division wall 21, which is relatively rigid as compared with the adjacent cushion elements 30, the shape of each cushion element is not easily deformed and thus maintained desirably firm.

[49] The division wall 21 may be provided by bonding both ends of an individual element of the same material as the wall of the frame 10 to the inner surfaces of the wall 11, while it is preferable that the division wall is integrally formed with the wall 11.

[50] Further, the number and elasticity of the cushion elements 30 mounted in the two parallel divisional mounting spaces 20 divided by the division wall 21 may be the same as in the first embodiment and will not be described in detail for this embodiment.

[51] FIG. 7 is an exploded perspective view of a mattress according to a third embodiment of the invention, FIG. 8 is a side cross-sectional view of the mattress shown in FIG. 7, and FIGs. 9 and 10 are side cross-sectional views showing modifications of the mattress shown in FIG. 7, in which the mattresses comprise a mattress frame 10 having a wall 11 and a mounting space 20 divided into three, five or seven divisional mounting spaces inside the frame 10 by two, four or six transverse division walls 21, a plurality of cushion elements 30, each of which is disposed in the corresponding divisional mounting spaces, a pair of auxiliary cushion members 30, a side pad 40, and upper and lower cover pads 50, 50'. The mounting space 20 are divided into three, five, or seven divisional mounting spaces 20a, 20b, 20c and 20d in the longitudinal direction

of the mattress or from the bottom to top thereof, the cushion elements have the same configuration as in the first and second embodiments, and the side pad and the upper and lower cover pads are fastened by a fastener 60, as in the first and second embodiments.

[52] As the number of the divisional mounting spaces of the mounting space 20 increase from three to five, and from five to seven, the lengths of the divisional mounting spaces of the mattress decrease, while the divisional mounting spaces may preferably have different lengths from each other in consideration of the sizes and weights of the body parts of the particular user or an average user and also be provided with cushion elements of different elasticity.

[53] For the mattress shown in FIGs. 7 and 8, it is preferable to make the length of the first and central divisional mounting space 20a shorter than the adjacent second divisional mounting spaces 20b and dispose in the first divisional mounting space 20a a cushion element 30, having elasticity lower than the cushion elements for the second divisional mounting spaces 20b.

[54] Further, in case of the mattress shown in FIG. 9 as one of the modifications of the mattress of the third embodiment of the present invention, it has been found suitable for the constitutions of the human body, divided into the hip, trunk, legs, head and feet, to make the length of the first divisional mounting space 20a shorter than the adjacent second divisional mounting spaces 20b and the lengths of the outermost third divisional mounting spaces 20c shorter than the first divisional mounting space 20a and dispose in the first divisional mounting space 20a a cushion element 30, which has elasticity lower than that for the second divisional mounting spaces 20b, and cushion elements 30, having elasticity higher than that for the first divisional mounting space 20a and lower than that for second divisional mounting spaces 20b, in the third divisional mounting spaces 20c.

[55] In case of the mattress shown in FIG. 10, the other modification to the mattress of the third embodiment of the present invention, the first divisional mounting space 20a has a length longer than the adjacent second divisional mounting spaces 20b, the lengths of the divisional mounting spaces 20c at the outer sides of the second divisional mounting spaces 20b are longer than the first divisional mounting space 20a and the fourth divisional mounting spaces 20d at the outer sides of the third divisional mounting spaces 20c have lengths longer than the second divisional mounting spaces 20b, while the elasticity of the cushion element 30 disposed in the first divisional mounting space 20a is lower than the cushion elements 30 in the second divisional mounting spaces 20b, the elasticity of the cushion elements 30 in the third divisional mounting spaces 20c is higher than that in the first divisional mounting space 20a and lower than that in the second divisional mounting spaces 20b, and the cushion elements in the fourth di-

visional mounting spaces 20d have the elasticity higher than that in the first and third divisional mounting spaces 20a and 20c and lower than that in the second divisional mounting spaces 20b.

[56] The above configurations are for allowing the user to have a calm and comfortable sleep with the neck, waist and crooks of the knees and arms, which are less heavy, narrower or slimmer than other body parts, being appropriately in contact with and supported by the corresponding cushion elements as are other body parts such as the head, trunk, hip, legs and feet, because other mattresses having a mattress element with the uniform elasticity may not be pressed down to make its surface take the shape or profile of the users body and thus it is not possible for the relatively lighter, narrower or slimmer body parts like the waist, neck and the crooks of the knees and arms to lie at the full length comfortably on the mattress.

[57] By making the elasticity of the mattress elements different as described above, the cushion elements 30 in the divisional mounting spaces 20a, 20b, 20c and 20d are differently pressed down, depending on the corresponding parts of the human body when a user lies on the mattress. In other words, a cushion element in the first divisional mounting space 20a for the hip is pressed down to the highest degree and ones in the second divisional mounting space 20b at the top portion for the waist to the least, while one in the third divisional mounting space 20c at the top portion of the mattress for the trunk less than one in the first divisional mounting space 20a and more than one in the fourth divisional mounting space 20d at the top portion of the mattress for the head and ones in the rest of the second to fourth divisional mounting space 20b, 20c and 20d at the bottom portion of the mattress for legs and feet to the degree relative to the weight of each part of the legs and feet.

[58] As described above, by disposing the cushion elements having different elasticity that are roughly in inverse proportion to the weight of the corresponding part of the human body, the mattress, actually the cushion elements, is pressed down, taking the profile or shape of the human body, and supports all the body parts comfortably. The same elasticity and length of each pair of the cushion element in the divisional mounting spaces 20b, 20c and 20d, sequentially outwardly provided from the first divisional mounting space 20a, allow the user to use the mattress with the top and the bottom reversed, if necessary.

[59] Referring to FIG. 11 showing an exploded perspective view of a mattress according to a fourth embodiment of the present invention, shown is a mattress comprising a mattress frame 10 having six divisional mounting spaces 20a, 20b and 20c, in the mounting space 20 partitioned by a longitudinal division wall 21 and two transverse division walls. Cushion elements 30 are made by arranging coil springs 31 in a fabric bag 32.

[60] The mattress shown in FIG. 11 may be suitable for particularly a king-sized or double bed for simultaneous use by two persons with different body constitutions of man and woman, such as height or weight, as a pair of cushion elements 30 having different elasticity may be used in each pair of the right and left divisional mounting spaces 20a, 20b or 20c.

[61] In addition, the lengths of one or more pairs of the divisional mounting spaces 20a, 20b and 20c may be made different for two users of considerably different body constitutions.

[62] FIG. 12 is an exploded perspective view of a mattress according to a fifth embodiment of the present invention and FIG. 13 is a side cross-sectional view of the mattress shown in FIG. 12.

[63] Referring to FIGs. 12 and 13, the mattress comprises: a mattress frame 10 which comprises a rectangular wall 11 formed by four bar-shaped urethane foam elements with both ends thereof being bonded to corresponding ends of other urethane foam elements, divisional mounting spaces 20a and 20b divided by a longitudinal and four transverse division walls 21 and 21' of bar-shaped urethane foam element with both ends thereof bonded either to the inner surface of the wall 11 or to the side surface of the longitudinal division wall 21, and a bottom cover 53 for closing up the lower opening of the frame 10 therewith; six cushion elements 30 disposed in each of the six divisional mounting spaces 20a and 20b for forming a mattress body with the frame 10; a lower cushion member 30a disposed under the frame 10; a side pad 40 covering the periphery of the structure formed by combining the lower cushion member 30a with the mattress body; an upper cover pad 50 covering the mattress body and provided with a fastener 60 for fastening the edge of the upper cover pad 50 to the upper edge of the side pad 40, and a lower cover pad 50' sewn along the lower edge of the side pad 40 and receiving the mattress body and the lower cushion member 30a together with the side pad 40.

[64] The lower cushion member 30a is desirably thicker than that of the mattress body comprising the frame 10 and the cushion elements 30, or both of them may have the same thickness.

[65] The cushion elements 30 and the lower cushion member 30a are respectively formed by enclosing a resilient urethane foam 33 or 33" in fabric bags 32 or 32" provided with a zipper 60b or 60e, whereas the spring structures described above may also be used alternatively.

[66] A separation sheet 52 is disposed between the frame 10 and the lower cushion member 30a and may be opened or closed by a fastener 60c provided at the outer edge thereof and the inner surface of the side pad 40. Because the outer edge of the lower cover pad 50' is sewn around the lower edge of the side pad 40, it is possible to put the

lower cushion member 30a into/out of the space formed by the side pad and the lower cover pad.

[67] The bottom sheet 53 is provided to prevent the cushion elements 30 in the divisional mounting spaces 20a and 20b from dropping out, but is not an essential component of the frame or the mattress.

[68] It is preferable that the lower cushion member 30a has elasticity stronger than the cushion elements 30 of the strongest elasticity and also to make the elasticity of each of the cushion elements different for the divisional mounting spaces 20a and 20b, as described in respect to the mattress according to the first embodiment of the present invention. Further, as described in respect to the mattress according to the fourth embodiment of the present invention, the widths of the divisional mounting spaces 20a and 20b and the elasticity of the cushion elements 30 are desirably different according to the locations of the divisional mounting spaces, that is the left or the right.

[69] Further, the lower cover pad may be fastened to the side pad by a fastener as in the preceding embodiments of the present invention.

[70] FIGS. 14 to 17 are side cross-sectional views of mattresses according to the modifications of the first embodiment of the present invention, in which a mounting space 20 is divided into even number of the divisional mounting spaces, i.e. two, four, six or eight. Each of the divisional mounting spaces of the mattresses shown in the drawings are provided to have lengths adapted to the size of the corresponding body parts of the user, and the configuration and function of each of the component may be the same as in the first to third embodiments and thus will not be described in detail.

[71] Lengths of the divisional mounting spaces of the mattresses may be set to be different from FIGs.14 to 17, while those mattresses may be used by turning them face down, instead of turning the top and bottom portions as the mattresses described in respect to the second to fourth embodiments.

[72] FIG. 18 is a side cross-sectional view of a mattress with a mounting space divided into nine divisional mounting spaces according to a modification of the third embodiment of the present invention, which may be suitable for a very tall person or user. The mattress has a first mounting space 20a at the center and second to fifth divisional mounting space 20b ~ 20e sequentially formed upwardly from the first divisional mounting space 20a. The lengths of the divisional mounting spaces are set in consideration of the sizes of the corresponding body parts of the user, i.e. the hip, waist, trunk, neck, and head, while the divisional mounting spaces 20b to 20e at the bottom portion of the mattress may have the same lengths as the corresponding divisional mounting spaces at the top portion thereof.

[73] The wall 11 of the frame 10 of the mattress according to the above embodiments of the present invention should be made to have the same as or lower elasticity than con-

ventional mattresses and sufficient strength to retain its original shape and elasticity over the mattress life as well, while it is preferable for the division walls 21 and 21' to have elasticity the same as or lower than a cushion element 30 having least elasticity among the cushion elements so that all the cushion elements may be pressed down by the body parts of the user without being obstructed by the division walls 21 and 21'. However, the division walls should also have sufficient strength which should be retained over the mattress life, as described for the wall 11.

[74] Alternatively, the frame 10 may be made by placing pocket springs 10c in vertical holes 10b formed at regular intervals in a urethane foam wall member 10a as shown in FIG. 19, by embedding pocket springs in a urethane foam wall element 10a as shown in FIG. 20, or by embedding an assembly of pocket springs arranged in a row in a urethane foam wall element 10a as shown in FIG. 21, while it may be possible to use common coil springs instead of the pocket springs.

[75] Further, various kinds of sponge materials other than urethane foam may be used for making cushion elements, as far as they have appropriate elasticity.

[76] FIGs. 22 and 23 are a partial exploded perspective view and a partial side cross-sectional view of a mattress body of a modification of the mattress according to the fourth embodiment of the present invention (see FIG. 11), which comprises a mattress frame 10 and cushion elements 30. The frame 10 comprises an elastic base plate 12 which is formed of urethane foam and has a plurality of sequential holes 10b, pocket springs 10c with the lower portion thereof fixed in one of the holes 10b, a wall 11 and division walls 21 and 21' which define a first and a second divisional mounting spaces 20a and 20b, and a plastic bottom plate 13 attached to the bottom of the base plate 12. Further, the cushion elements 30 are placed in the divisional mounting spaces 20a and 20b.

[77] Referring to FIGs. 22 and 23, the pocket springs 10c are fixed in the holes 10b, not protruding downwardly from the base plate 12, because the holes 10b are closed by the bottom plate 13, while it may be possible to form holes 10b with the bottoms closed, for example, by using a thick base plate 12.

[78] Further, it is preferable to have the middle and/or upper portions of the pocket springs 10c coupled to the adjacent pocket springs 10c so that the frame may have strength enough to prevent the wall and the division walls from being swayed when the cushion elements 30 of the mattress are pressed down by the weight of the user.

[79] Further, requirements for the elasticity and the strength of the wall and division walls described above for other embodiments apply to the mattress of the FIGs. 22 and 23.

[80] The division walls 21 and 21' of the frame 10 may have the same height as the wall 11 as illustrated for the above embodiments, but also a height slightly lower than the wall 11, for example, a half or more than that of the wall 11, with the elasticity lower

than the wall 11.

[81] In addition to making the cushion elements 30 have the same height but different elasticity as described above, one cushion element or a combination of two or more adjacent cushion elements may have the edges of the same or about the same height and a round center portion with a gradually protruding or receding surface. Further, a divisional mounting space may have a plurality of cushion elements disposed therein.

[82] Although the preferred embodiments of the present invention have been disclosed for illustrative purposes, those skilled in the art will appreciate that various modifications, additions and substitutions are possible, without departing from the scope and spirit of the present invention. Further, the present invention is not limited to the disclosed exemplary embodiments and the description in the above, but shall be restricted by the accompanying claims only.

Claims

[1] A mattress comprising:
a mattress frame with an enclosing wall for providing a mounting space therein;
a plurality of cushion elements disposed in said mounting space and forming a mattress body together with said mattress frame in one or two rows;
a side pad covering the periphery of said mattress body; and
upper and lower cover pads with outer edges fastened respectively to the top and bottom edges of said side pad to enclose the upper and lower surfaces of said mattress body.

[2] The mattress as claimed in claim 1, further comprising:
a longitudinal division wall of said mattress frame for dividing said mounting space into a pair of parallel divisional mounting spaces, wherein one or more cushion elements are disposed in each of said divisional mounting spaces.

[3] The mattress as claimed in claim 1, further comprising:
one or more transverse division walls of said mattress frame for dividing said mounting space into two or more divisional mounting spaces, wherein one or more cushion elements are disposed in each of said divisional mounting spaces.

[4] The mattress as claimed in claim 1, further comprising:
a longitudinal division wall and one or more transverse division walls of said mattress frame for dividing said mounting space into four or more even numbers of divisional mounting spaces, wherein one or more cushion elements are disposed in each of said divisional mounting spaces.

[5] The mattress as claimed in claim 1, further comprising:
a lower cushion member having the same size of the periphery as said mattress body, disposed under said mattress body and covered by said side pad together with said mattress body.

[6] The mattress as claimed in any of the preceding claims, wherein said enclosing wall and/or said division wall or walls are integrally made of elastic sponge material or materials.

[7] The mattress as claimed in any of claims 1 to 5, wherein said enclosing wall and/or said division wall or walls are made of bar elements of elastic sponge material with the opposite ends thereof bonded to the corresponding opposite ends of the adjacent bar element of elastic sponge material.

[8] The mattress as claimed in any of claims 1 to 5, wherein said enclosing wall and/or said division wall or walls comprising a multiplicity of spring structures with the bottom portion thereof fixed corresponding mounting hole provided on a frame base.

[9] The mattress as claimed in any of claims 1 to 5, wherein said enclosing wall and/or said division wall or walls comprising a frame member of elastic sponge material and a multiplicity of spring structures are kept apart or adjoined to one another and embedded in said frame member.

[10] The mattress as claimed in claim 5, wherein said lower cushion member comprises a frame with or without one or more longitudinal or transverse division walls and a plurality of cushion elements enclosed in said frame.

[11] The mattress as claimed in claim 8, wherein said mattress frame further comprises a closing plate attached to the bottom of said frame base.

[12] The mattress as claimed in claim 8, wherein said spring structures are joined to the adjacent spring structures at the middle or upper parts thereof.

[13] The mattress as claimed in any of claims 1 to 5, wherein said mattress elements are of the same elasticity.

[14] The mattress as claimed in any of claims 1 to 5, wherein said mattress elements are of the different elasticity.

[15] The mattress as claimed in any of claims 1 to 5, wherein said cushion elements are made of elastic sponge material or a cylindrical spring structure or spring structures using coil springs or pocket springs.

[16] The mattress as claimed in claim 15, wherein said cushion element is packed in a fabric bag.

[17] The mattress as claimed in claim 1, 3 or 5, wherein said mounting space is divided into 2 to 9 divisional mounting spaces in a row.

[18] The mattress as claimed in claim 2, 3 or 4, comprising 2 rows of 2 to 9 of said divisional mounting spaces.

[19] The mattress as claimed in claim 17, comprising even number of said divisional mounting spaces.

[20] The mattress as claimed in claim 17, comprising odd number of said divisional mounting spaces.

[21] The mattress as claimed in claim 18, comprising even number of said divisional mounting spaces in each row.

[22] The mattress as claimed in claim 18, comprising odd number of said divisional mounting spaces in each row.

[23] The mattress as claimed in any of claims 19 to 22, wherein said divisional mounting spaces have the same length.

[24] The mattress as claimed in any of claims 19 to 22, wherein said divisional mounting spaces have different lengths.

[25] The mattress as claimed in claim 20 or 22, wherein one or more pairs of said divisional mounting spaces are sequentially provided outwardly of the central di-

visional mounting spaces and the same pair of said divisional mounting spaces have the same length.

[26] The mattress as claimed in claim 25, comprising three divisional mounting spaces of a first and central divisional mounting space and a pair of second divisional mounting spaces on top and bottom of said first divisional mounting space, wherein cushion elements in both of said second divisional mounting spaces have the same elasticity which is higher than that of the cushion element in said first and central divisional mounting space.

[27] The mattress as claimed in claim 26, wherein the length of said first divisinal mounting space is shorter than that of said second divisional mounting spaces.

[28] The mattress as claimed in claim 26 or 27, wherein the elasticity of the cushion element in said first divisional mounting space is lower than that of the cushion elements in said second divisional mounting spaces.

[29] The mattress as claimed in claim 25, comprising five divisional mounting spaces of a first and central divisional mounting space, a pair of second divisional mounting spaces on top and bottom of said first divisional mounting space and a pair of third divisional mounting spaces outside each of said second divisional mounting spaces in a row, wherein each pair of cushion elements in said second and third divisional mounting spaces have the same elasticity and the elasticity of cushion elements in said third divisional mounting spaces is different from cushion elements in said first and second divisional mounting spaces.

[30] The mattress as claimed in claim 29, wherein the length of said first divisional mounting space is shorter than that of said second divisional mounting spaces and longer than that of said third divisional mounting spaces.

[31] The mattress as claimed in claim 29 or 30, wherein the elasticity of cushion elements in said first divisional mounting space is lower than that for said second divisional mounting spaces the elasticity of cushion elements in both of said third divisional mounting spaces is lower than said second divisional mounting spaces and higher than said first divisional mounting space.

[32] The mattress as claimed in claim 25, comprising seven divisional mounting spaces of a first and central divisional mounting spaces and three pairs of second, third and fourth divisional mounting spaces sequentially provided on top and bottom of said first divisional mounting space in a row, wherein cushion elements in each pair of said second to fourth divisional mounting spaces have the same elasticity.

[33] The mattress as claimed in claim 32, wherein the length of said first divisional mounting space is shorter than that of said second divisional mounting spaces, the length of said third divisional mounting spaces is shorter than that of said

first divisional mounting space and said fourth divisional mounting spaces have the length shorter than that of said second divisional mounting spaces.

[34] The mattress as claimed in claim 32 or 33, wherein the elasticity of the cushion element in said first divisional mounting space is lower than that for said second divisional mounting spaces, the elasticity of the cushion elements for said third divisional mounting spaces is higher than that for said first divisional mounting space and lower than that for said second divisional mounting spaces and the elasticity of cushion members in both of said fourth divisional mounting spaces is higher than cushion elements in said first and third divisional mounting spaces and lower than cushion members in said second divisional mounting spaces.

[35] The mattress as claimed in claim 25, comprising nine divisional mounting spaces of a first and central divisional mounting spaces and four pairs of second, third, fourth and fifth divisional mounting spaces sequentially provided on top and bottom of said first divisional mounting space in a row, wherein cushion elements in each pair of said second to fifth divisional mounting spaces have the same elasticity.

[36] The mattress as claimed in claim 35, wherein the length of said first divisional mounting space is shorter than that of said second divisional mounting spaces, the length of said third divisional mounting spaces is shorter than that of said first divisional mounting space and the same as that of said fifth divisional mounting spaces and said fourth divisional mounting spaces have the length shorter than that of said second divisional mounting spaces.

[37] The mattress as claimed in claim 35 or 36, wherein the elasticity of the cushion element in said first divisional mounting space is lower than that for said second divisional mounting spaces, the elasticity of the cushion elements for said third divisional mounting spaces is higher than that for said first divisional mounting space and lower than that for said second divisional mounting spaces, the elasticity of cushion members in both of said fourth divisional mounting spaces is higher than cushion elements in said first and third divisional mounting spaces and lower than cushion members in said second divisional mounting spaces and the elasticity of cushion members in both of said fifth divisional mounting spaces is higher than cushion elements in said first and third divisional mounting spaces and lower than cushion members in said second and fourth divisional mounting spaces.

[38] The mattress as claimed in claim 1, 2 or 4, wherein one or more of left cushion elements have the elasticity different from that of the adajacent right cushion element.

[39] The mattress as claimed in any of claims 1 to 5, comprising one or two auxilliary

cushion elements made of an elastic sponge material or a spring structure comprising coil springs or pocket springs and disposed on and/or under said mattress body.

[40] The mattress as claimed in claim 39, wherein said lower mattress member is formed of an elastic sponge material or a spring structure made of coil springs or pocket springs.

[41] The mattress as claimed in claim 5 or 39, comprising a separation sheet disposed between said mattress body and said lower cushion member.

[42] The mattress as claimed in claim 5, wherein said mattress frame comprises a closing sheet attached thereunder.

[43] The mattress as claimed in claim 5 or 39, wherein said lower cushion member has a higher elasticity than said mattress body.

[44] The mattress as claimed in any of claims 1 to 5, wherein a fastener is provided to separably couple said side pad and said upper cover pad together.

[45] The mattress as claimed in claim 44, wherein a fastener is provided to separably couple said side pad and said lower cover pad together.

AMENDED CLAIMS received by the International Bureau on 09 February 2009 (09.02.2009)

【CLAIMS】

【Claim 1】

A mattress comprising:

a mattress frame with an enclosing wall with at least two transverse division walls and with or without a longitudinal division wall, made of elastic material, for forming three divisional mounting spaces of a first and central divisional mounting space and a pair of second divisional mounting spaces, provided outwardly of said first and central divisional mounting space, in one or two rows;

one or more cushion elements disposed in each of said divisional mounting spaces and forming a mattress body together with said mattress frame;

a side pad covering the periphery of said mattress body; and

upper and lower cover pads with outer edges fastened respectively to the top and bottom edges of said side pad to enclose the upper and lower surfaces of said mattress body,

wherein said cushion elements in both of said second divisional mounting spaces have the same elasticity which is higher than that of the cushion element in said first and central divisional mounting space.

【Claim 2】

The mattress as claimed in claim 1, further comprising:

a lower cushion member having the same size of the periphery as said mattress body, disposed under said mattress body and covered by said side pad together with said mattress body.

【Claim 3】

The mattress as claimed in claim 1 or 2, wherein said enclosing wall and/or said division wall or walls are integrally made of elastic sponge material or materials.

【Claim 4】

The mattress as claimed in claim 1 or 2, wherein said enclosing wall and/or said division wall or walls are made of bar elements of elastic sponge material with the opposite ends thereof bonded to the corresponding opposite ends of the adjacent bar element of elastic sponge material.

【Claim 5】

The mattress as claimed in claim 1 or 2, wherein said enclosing wall and/or said division wall or walls comprising a multiplicity of spring structures with the bottom portion thereof fixed in corresponding mounting hole provided on a frame base.

【Claim 6】

The mattress as claimed in claim 1 or 2, wherein said enclosing wall and/or said division wall or walls comprise a frame member of elastic sponge material and a multiplicity of spring structures are kept apart or adjoined to one another and embedded in said frame member.

【Claim 7】

The mattress as claimed in claim 2, wherein said lower cushion member comprises a frame with or without one or more longitudinal or transverse division walls and a plurality of cushion elements enclosed in said frame.

【Claim 8】

The mattress as claimed in claim 5, wherein said mattress frame further comprises a closing plate attached to the bottom of said frame base.

【Claim 9】

The mattress as claimed in claim 5, wherein said spring structures are joined to the adjacent spring structures at the middle or upper parts thereof.

【Claim 10】

The mattress as claimed in claim 1 or 2, wherein said cushion elements are made of elastic sponge material or a cylindrical spring structure or spring structures using coil springs or pocket springs.

【Claim 11】

The mattress as claimed in claim 10, wherein said cushion element is packed in a fabric bag.

【Claim 12】

The mattress as claimed in claim 1, wherein the length of said first divisional mounting space is shorter than that of said second divisional mounting spaces, which have the same length.

【Claim 13】

The mattress as claimed in claim 1, wherein the length of said first divisional mounting space is the same as that of said second divisional mounting spaces, which have the same length.

【Claim 14】

The mattress as claimed in claim 1, further comprising a pair of third divisional mounting spaces outside each of said second divisional mounting spaces in one or two rows, wherein each pair of cushion elements in said third divisional mounting spaces have the same elasticity and the elasticity of cushion elements in said third divisional mounting spaces is different from cushion elements in said first and second divisional mounting spaces.

【Claim 15】

The mattress as claimed in claim 14, wherein the elasticity of cushion elements in said third divisional mounting spaces is lower than cushion elements in said second divisional mounting spaces and higher than cushion elements in said first divisional mounting space.

【Claim 16】

The mattress as claimed in claim 14 or 15, wherein the length of said first divisional mounting space is shorter than that of said second divisional mounting spaces and longer than that of said third divisional mounting spaces, which have the same length.

【Claim 17】

The mattress as claimed in claim 14, further comprising a pair of fourth divisional mounting spaces provided on top and bottom of said third divisional mounting space in one or two rows, wherein cushion elements in each pair of said fourth divisional mounting spaces have the same elasticity.

【Claim 18】

The mattress as claimed in claim 17, wherein the length of said first divisional mounting space is shorter than that of said second divisional mounting spaces, the length of said third divisional mounting spaces is shorter than that of said first divisional mounting space and said fourth divisional mounting spaces have the length shorter than that of said second divisional mounting spaces.

【Claim 19】

The mattress as claimed in claim 17 or 18, wherein the elasticity of the cushion element in said first divisional mounting space is lower than that for said second divisional mounting spaces, the elasticity of the cushion elements for said third divisional mounting spaces is higher than that for said first divisional mounting space and lower than that for said second divisional mounting spaces and the elasticity of cushion members in said fourth divisional mounting spaces is higher than cushion elements in said first and third divisional mounting spaces and lower than cushion members in said second divisional mounting spaces.

【Claim 20】

The mattress as claimed in claim 17, further comprising a pair of fifth divisional mounting spaces provided on top and bottom of said fourth divisional mounting spaces in one or two rows, wherein cushion elements in each pair of fifth divisional mounting spaces have the same elasticity.

【Claim 21】

The mattress as claimed in claim 20, wherein the length of said first divisional mounting space is shorter than that of said second divisional mounting spaces, the length of said third divisional mounting spaces is shorter than that of said first divisional mounting space and the same as that of said fifth divisional mounting spaces and said fourth divisional mounting spaces have the length shorter than that of said second divisional mounting spaces.

【Claim 22】

The mattress as claimed in claim 20 or 21, wherein the elasticity of the cushion element in said first divisional mounting space is lower than that for said second divisional mounting spaces, the elasticity of the cushion elements for said third divisional mounting spaces is higher than that for said first divisional mounting space and lower than that for said second divisional mounting spaces, the elasticity of cushion members in said fourth divisional mounting spaces is higher than cushion elements in said first and third divisional mounting spaces and lower than cushion members in said second divisional mounting spaces and the elasticity of cushion members in said fifth divisional mounting spaces is higher than cushion elements in said first and third divisional mounting spaces and lower than cushion members in

said second and fourth divisional mounting spaces.

【Claim 23】

The mattress as claimed in claim 1, wherein one or more of the left cushion elements have the elasticity different from that of the adjacent right cushion element.

【Claim 24】

The mattress as claimed in claim 1, further comprising one or two auxilliary cushion elements made of an elastic sponge material or a spring structure comprising coil springs or pocket springs and disposed on and/or under said mattress body.

【Claim 25】

The mattress as claimed in claim 2, wherein said lower mattress member is formed of elastic sponge material or a spring structure made of coil springs or pocket springs.

【Claim 26】

The mattress as claimed in claim 2 or 25, further comprising a separation sheet disposed between said mattress body and said lower cushion member.

【Claim 27】

The mattress as claimed in claim 2, wherein said mattress frame comprises a closing sheet attached thereunder.

【Claim 28】

The mattress as claimed in claim 2 or 25, wherein said lower cushion member has a higher elasticity than said mattress body.

【Claim 29】

The mattress as claimed in claim 1, wherein a fastener is provided to separably couple said side pad and said upper cover pad together.

【Claim 30】

The mattress as claimed in claim 1 or 29, wherein a fastener is provided to separably couple said side pad and said lower cover pad together.

[Fig. 1]

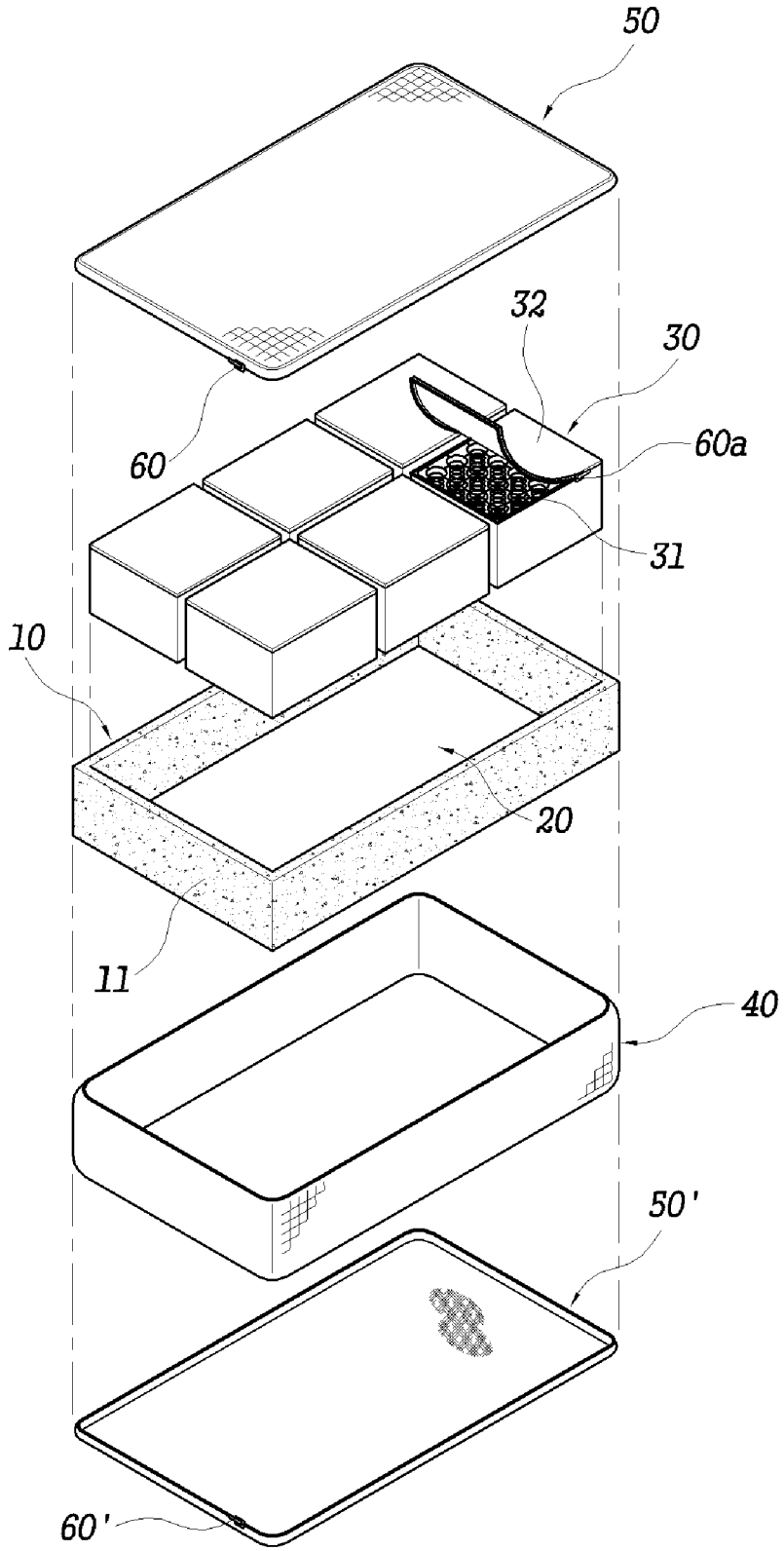

[Fig. 2]

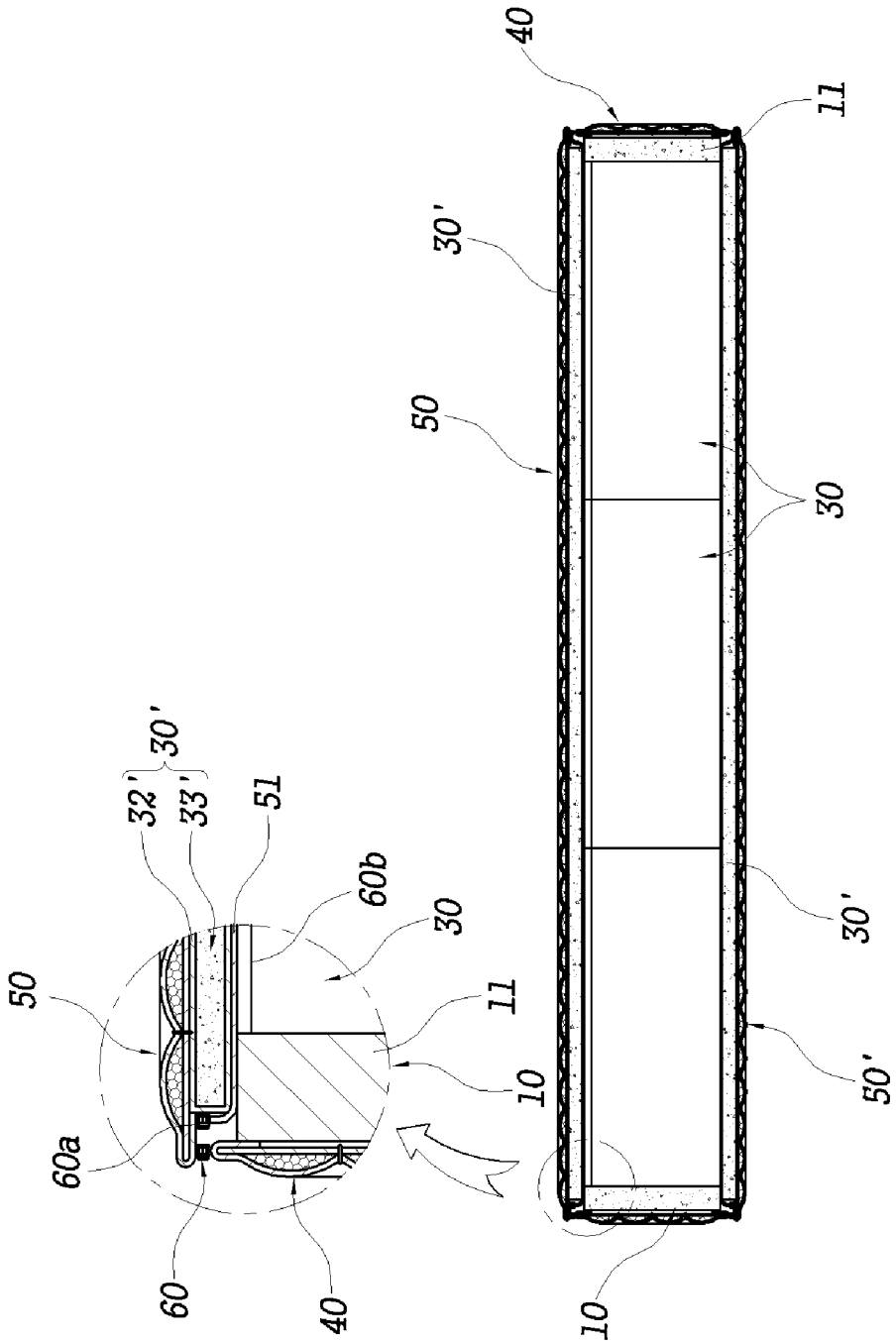

[Fig. 3]

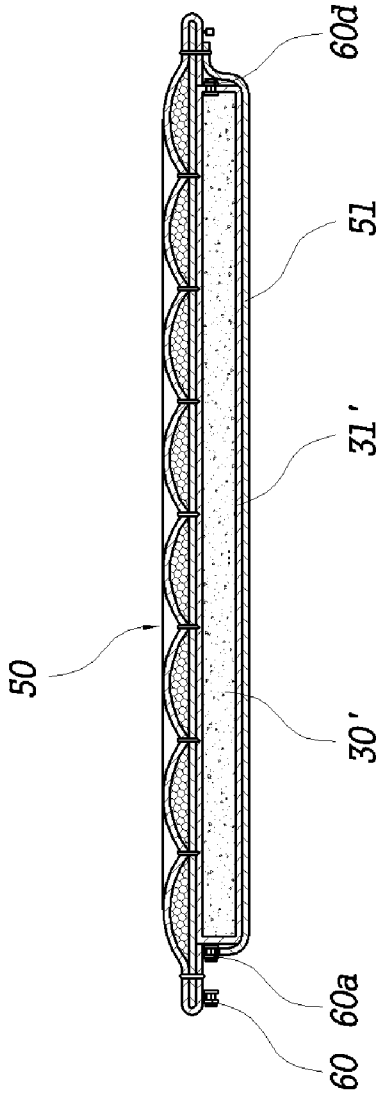

[Fig. 4]

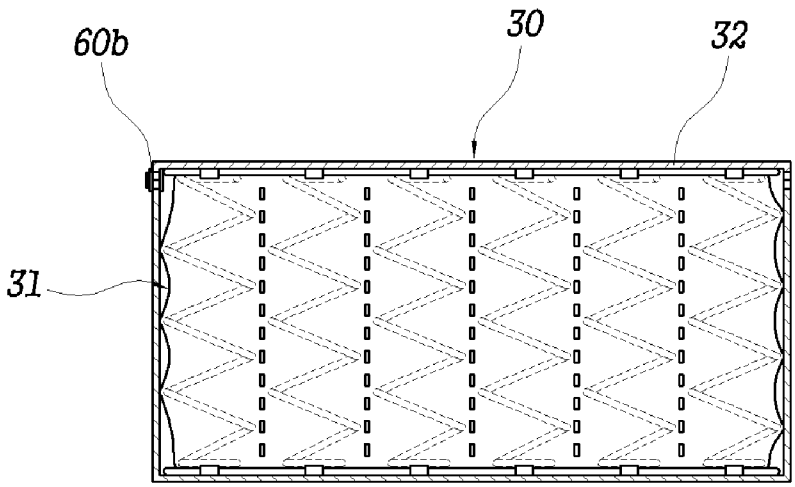

[Fig. 5]

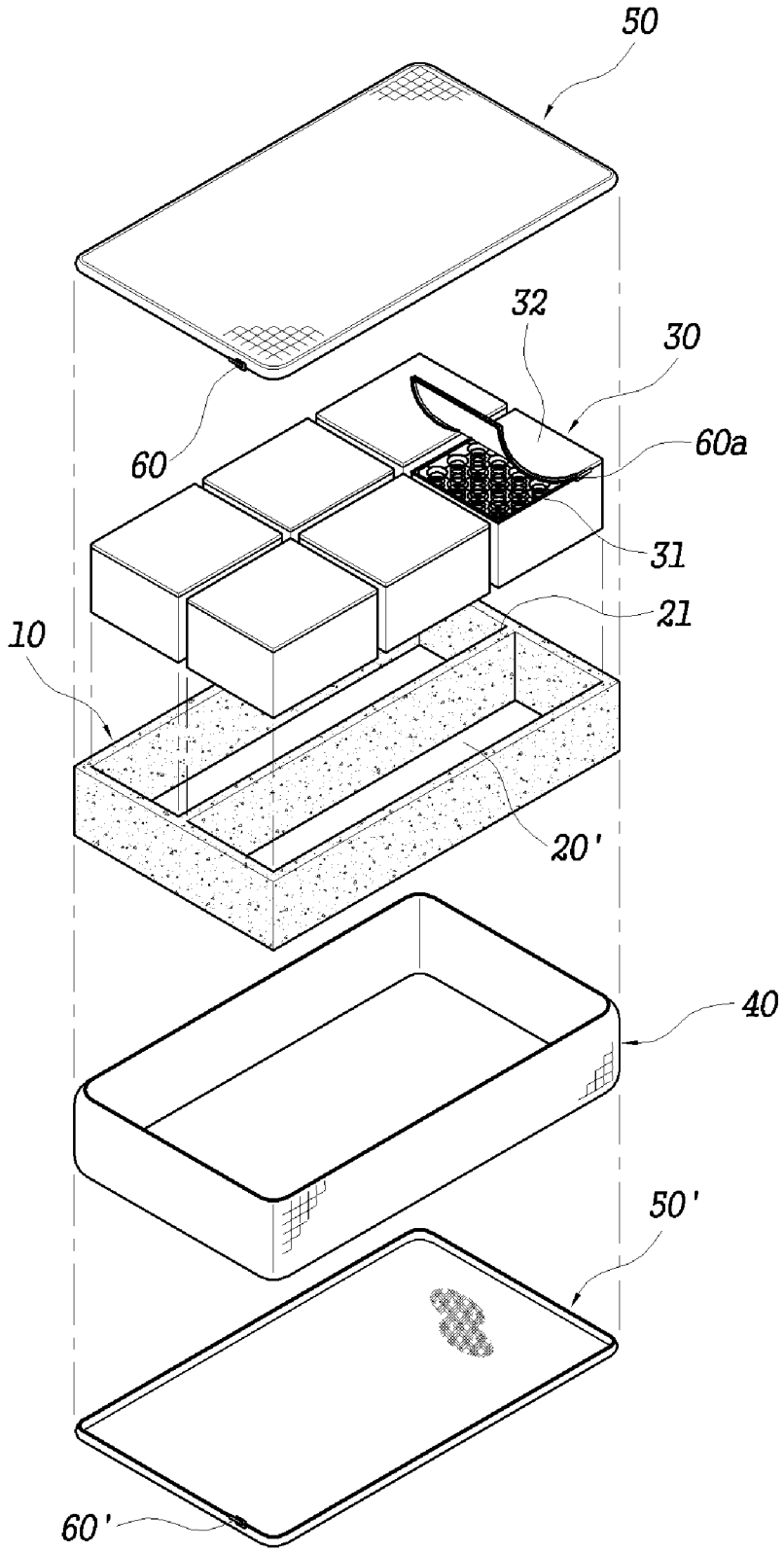

[Fig. 6]

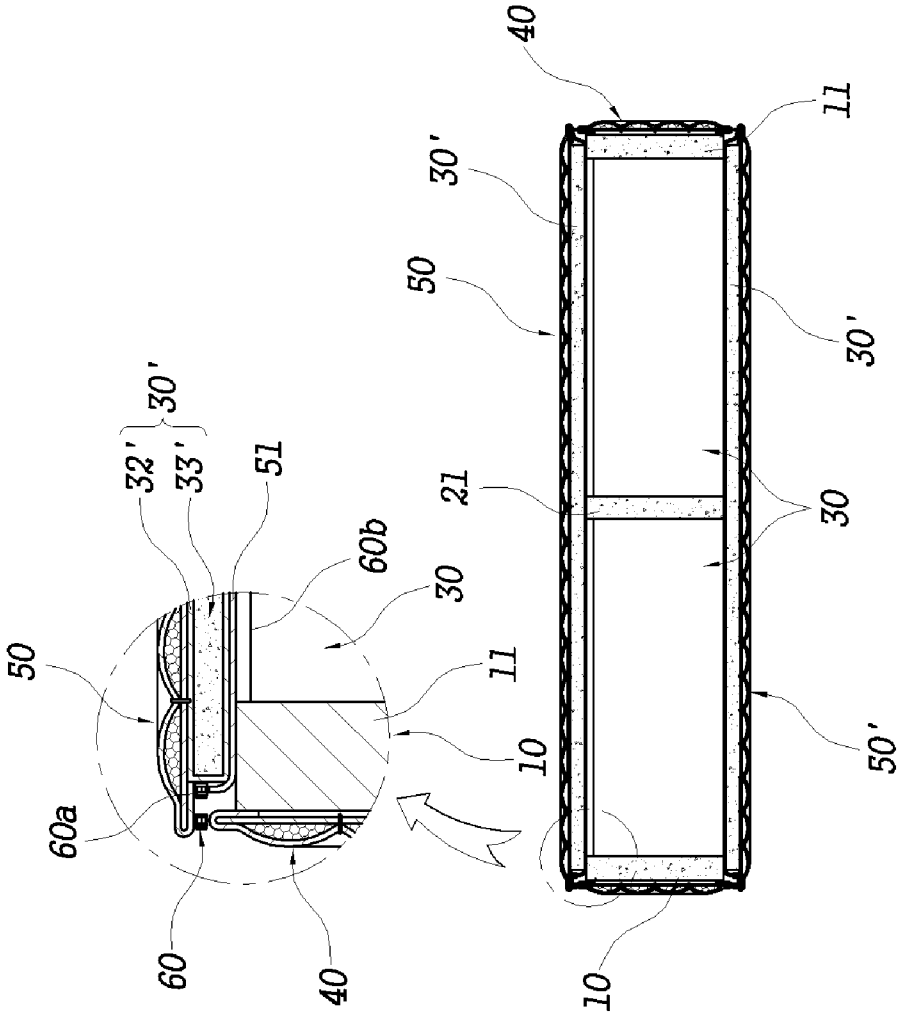

[Fig. 7]

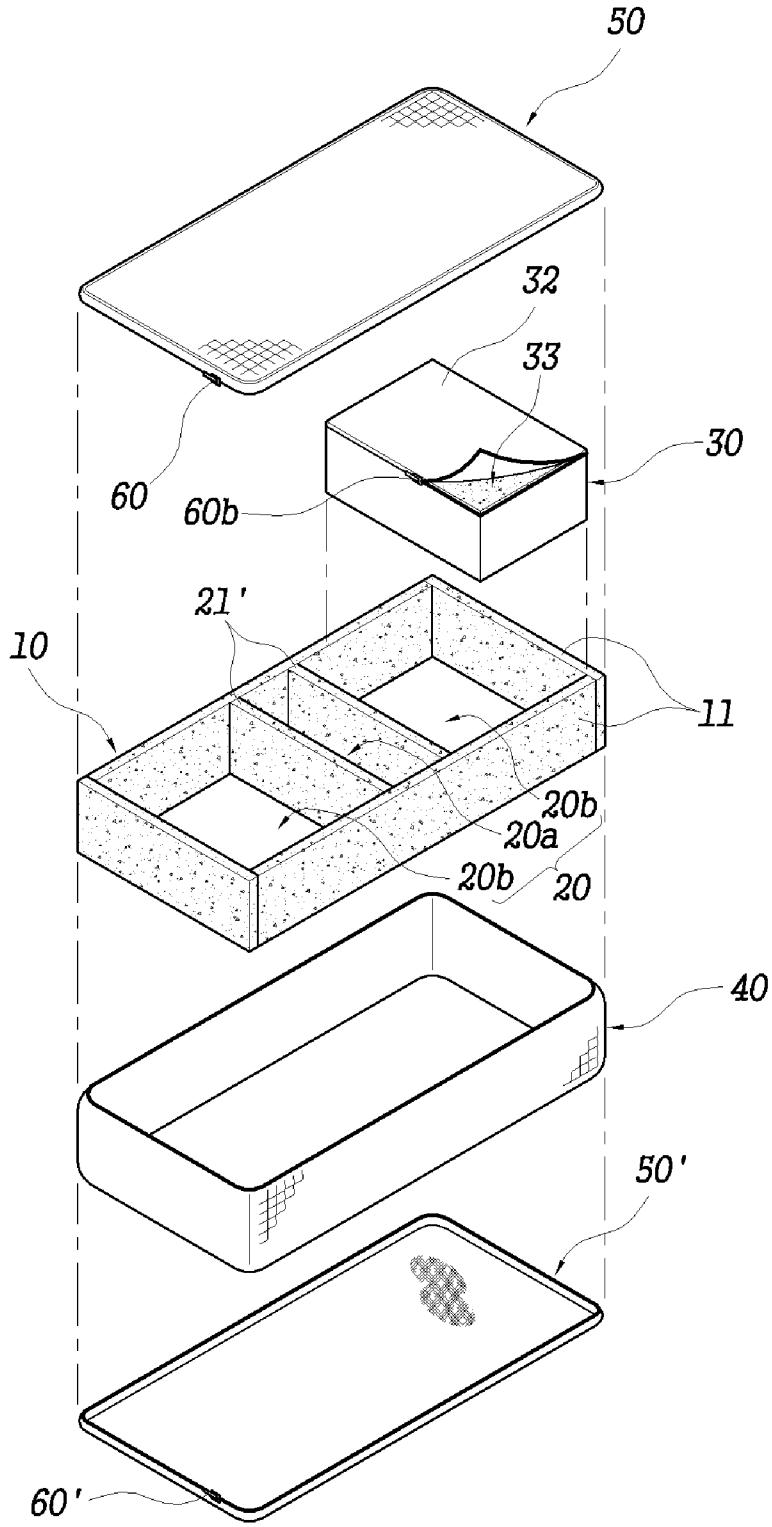

[Fig. 8]

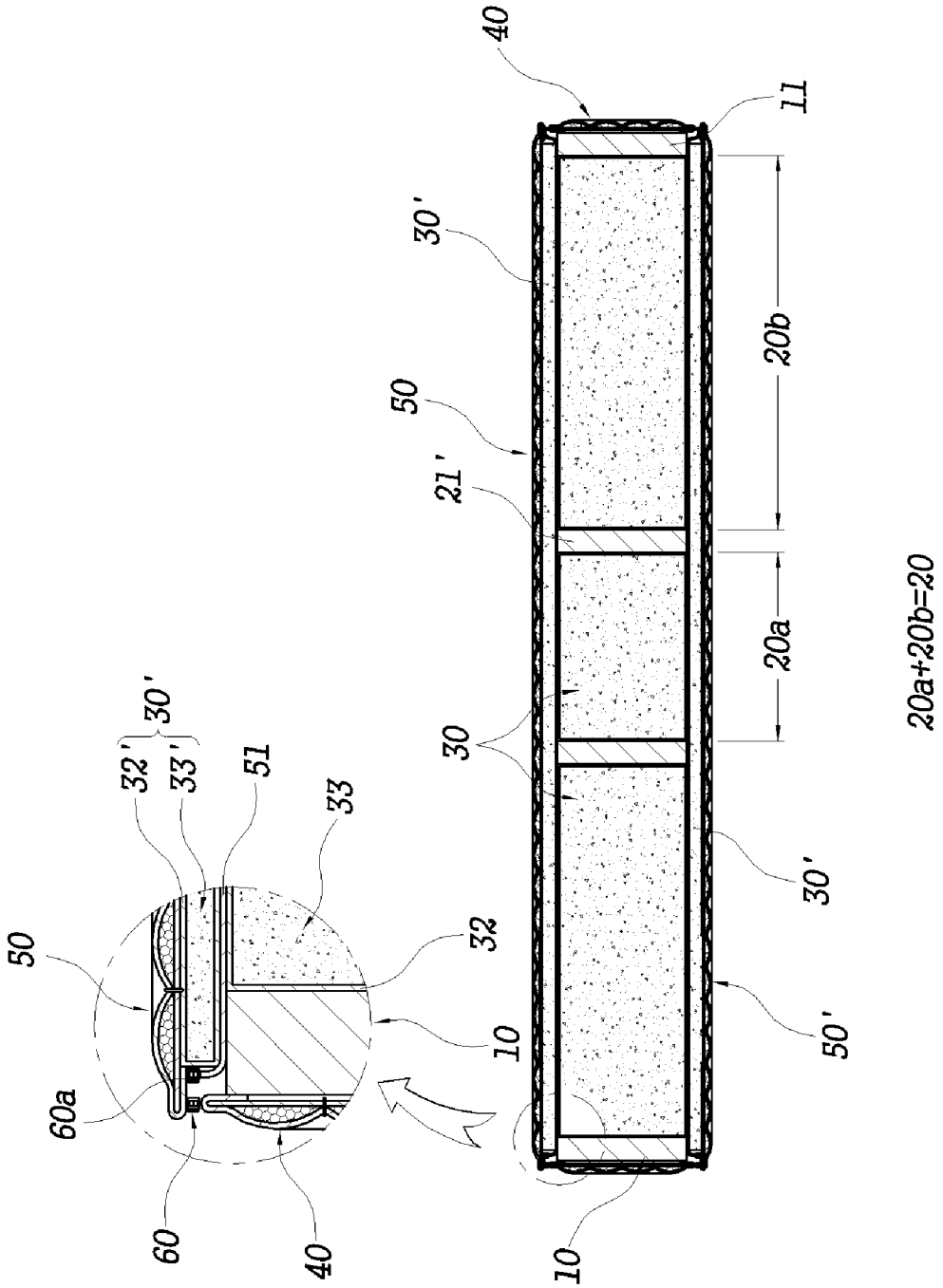
40
11
30'
20b
50
21'
20a
30
20a+20b=20
30'
50'
10
32
33
51
32'
33'
30'
50
60a
60
40
10

[Fig. 9]

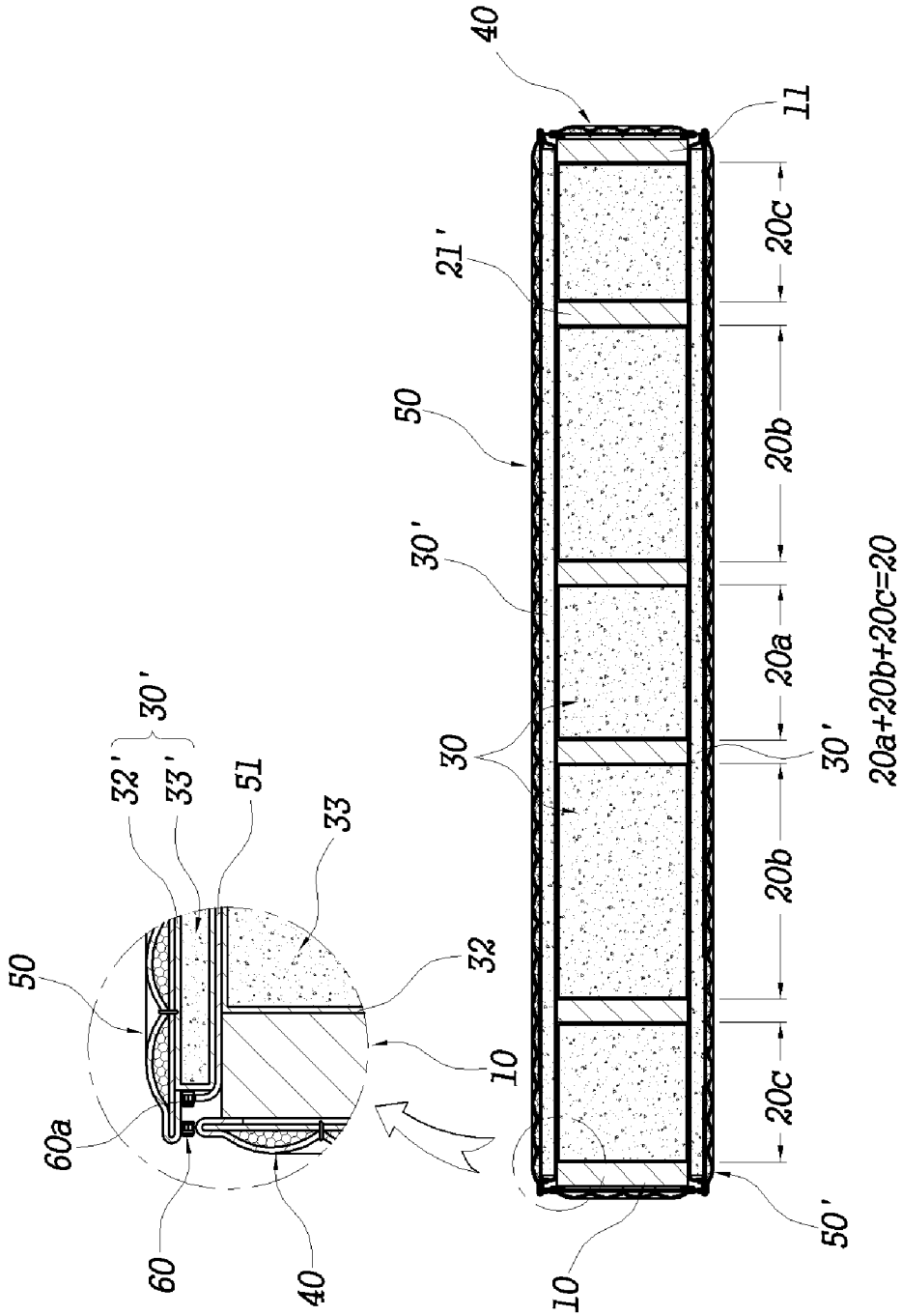
40
11
21'
50
30'
30
30'
20c
20b
20a
20b
20c
20a+20b+20c=20
50'
10
30'
32'
33'
51
33
32
50
10
60a
60
40

[Fig. 10]

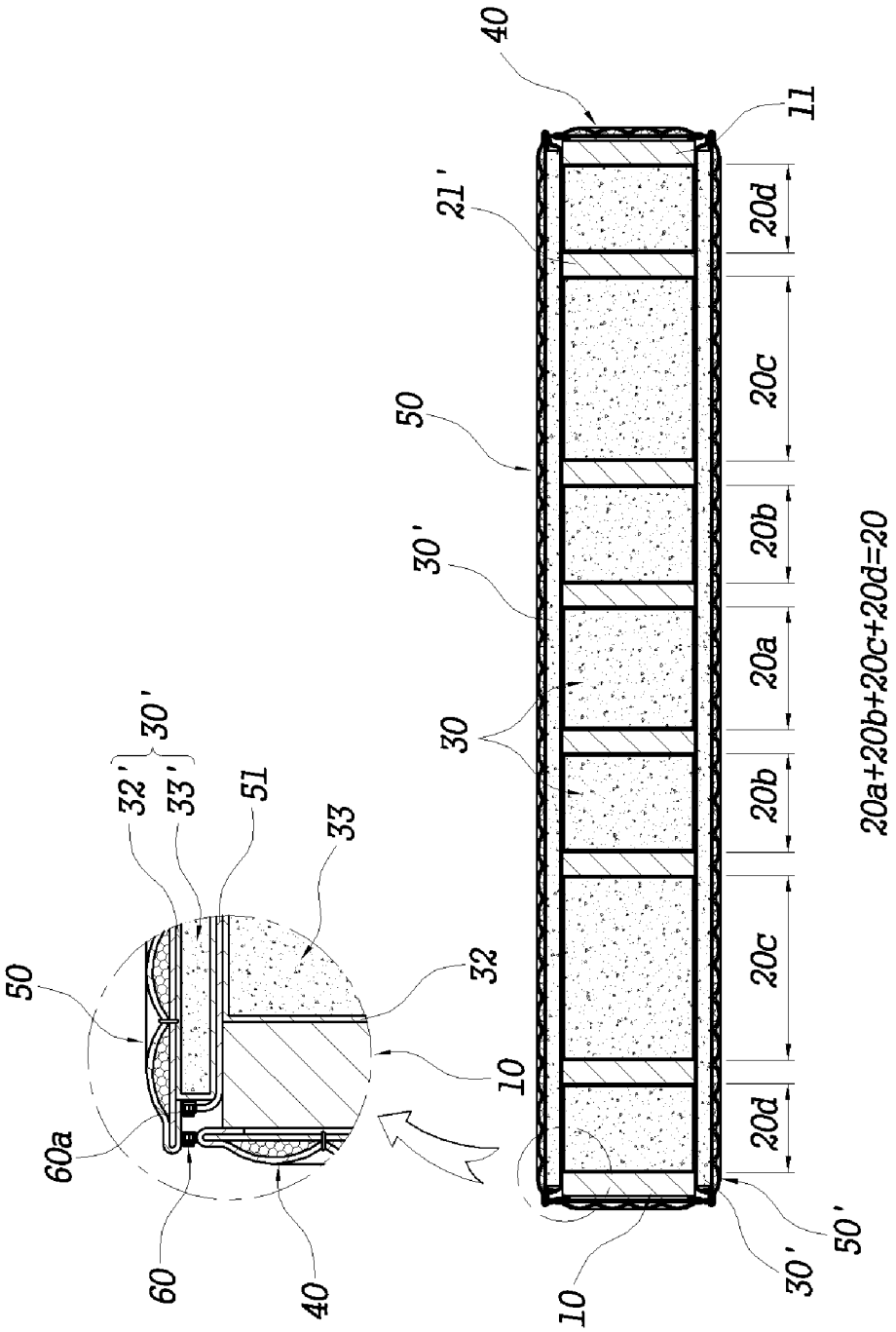
40
11
21'
20d
20c
50
20b
30'
20a
30
20b
20c
20d
20a+20b+20c+20d=20
30'
32'
33'
51
33
50
32
10
60a
60
40
10
30'
50'

[Fig. 11]

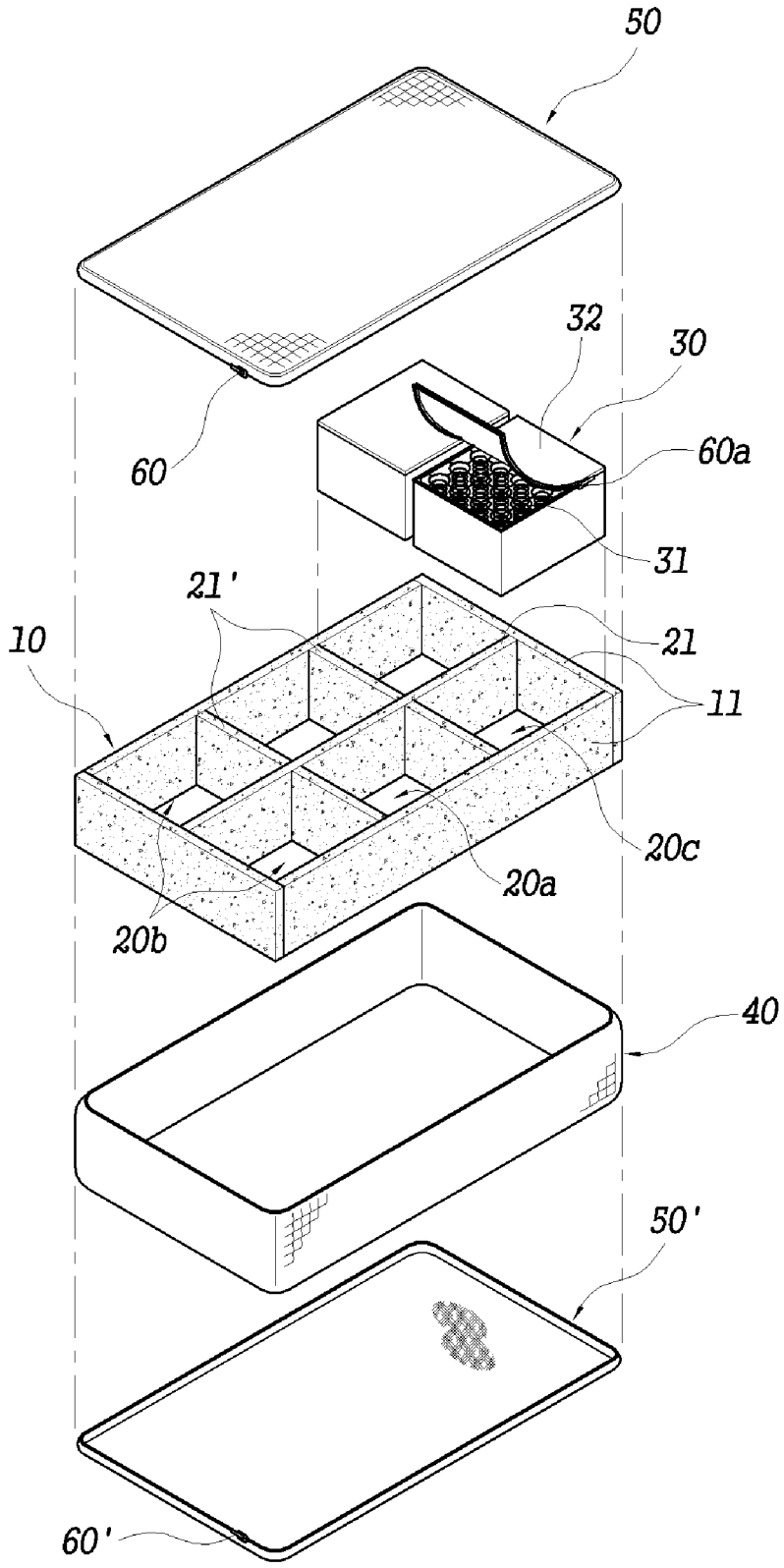

[Fig. 12]

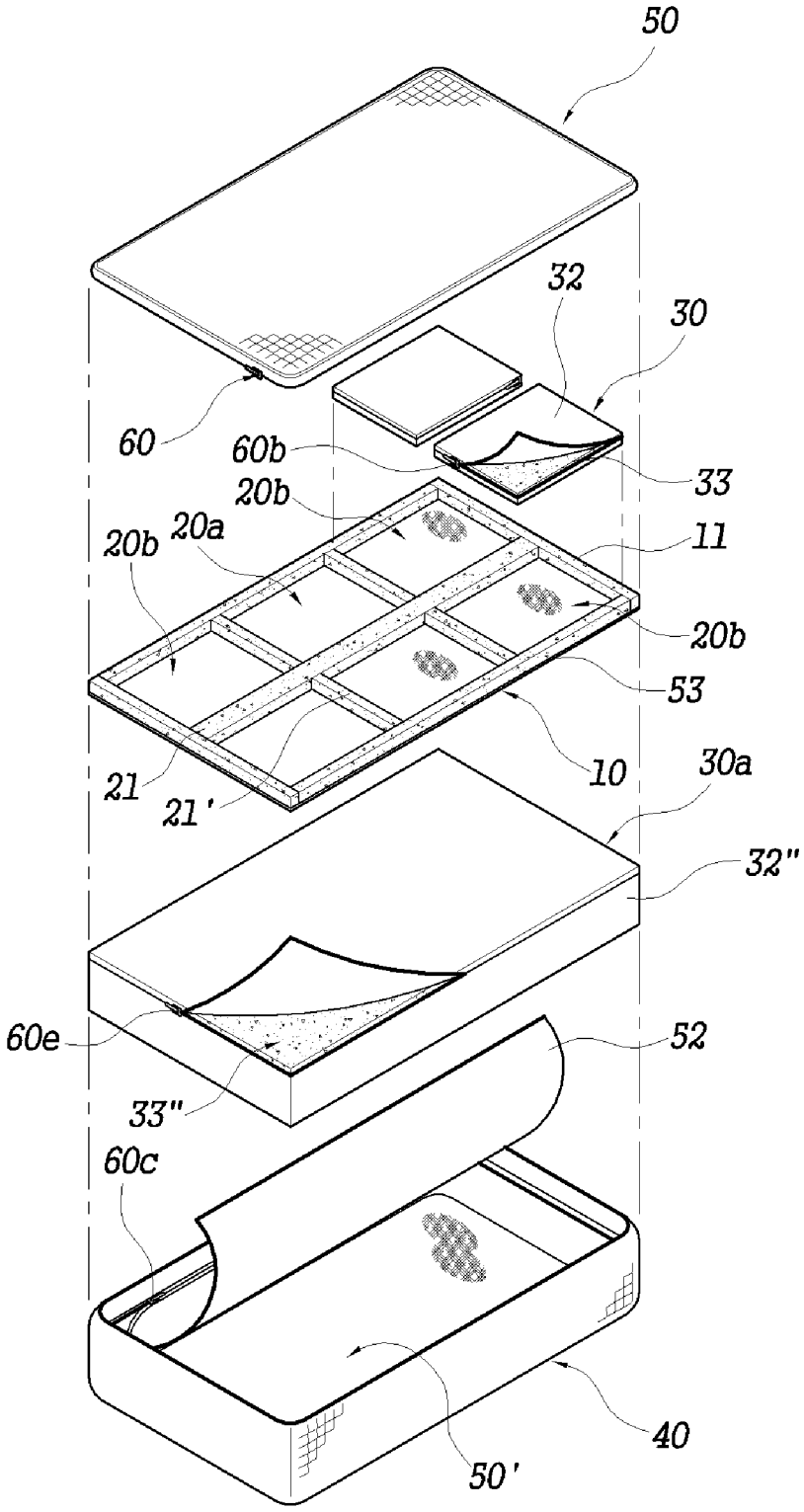
50
32
30
60
60b
33
20b
20b
20a
11
20b
53
10
21
21'
30a
32"
60e
52
33"
60c
40
50'

[Fig. 13]

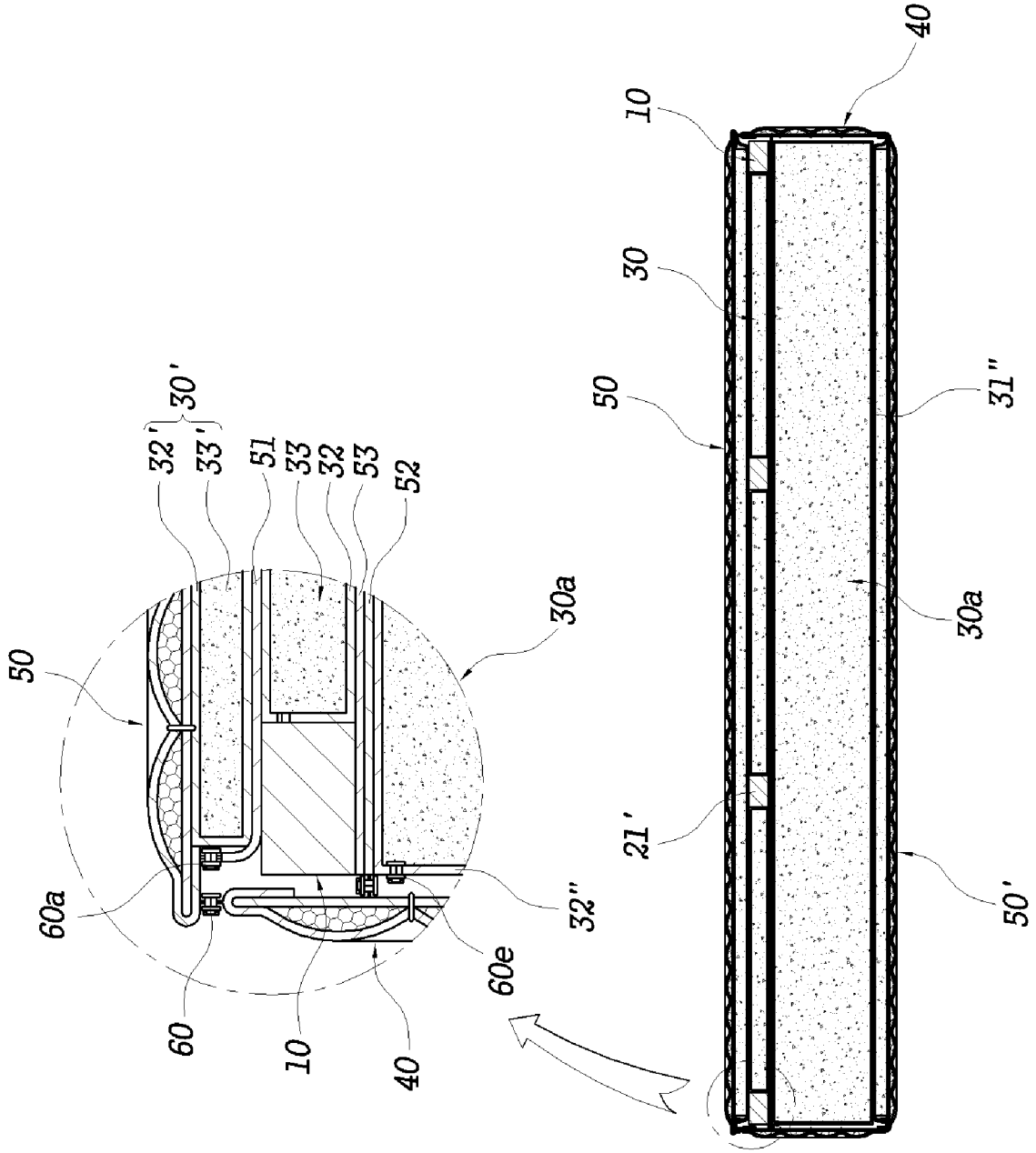
40
10
30
50
31''
30a
21'
50'
30'
32'
33'
51
33
32
53
52
30a
50
60a
32''
60e
60
10
40

[Fig. 14]

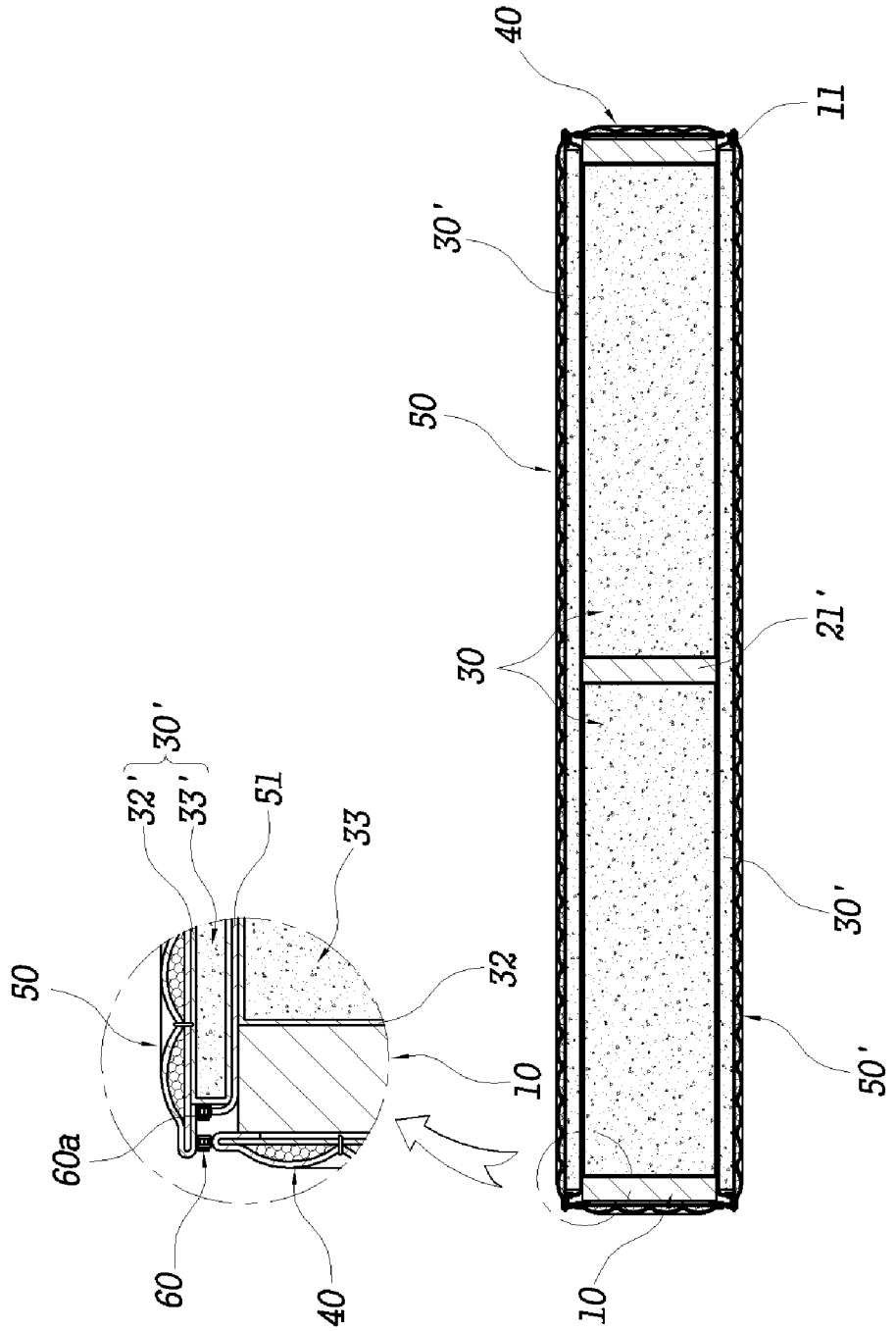

[Fig. 15]

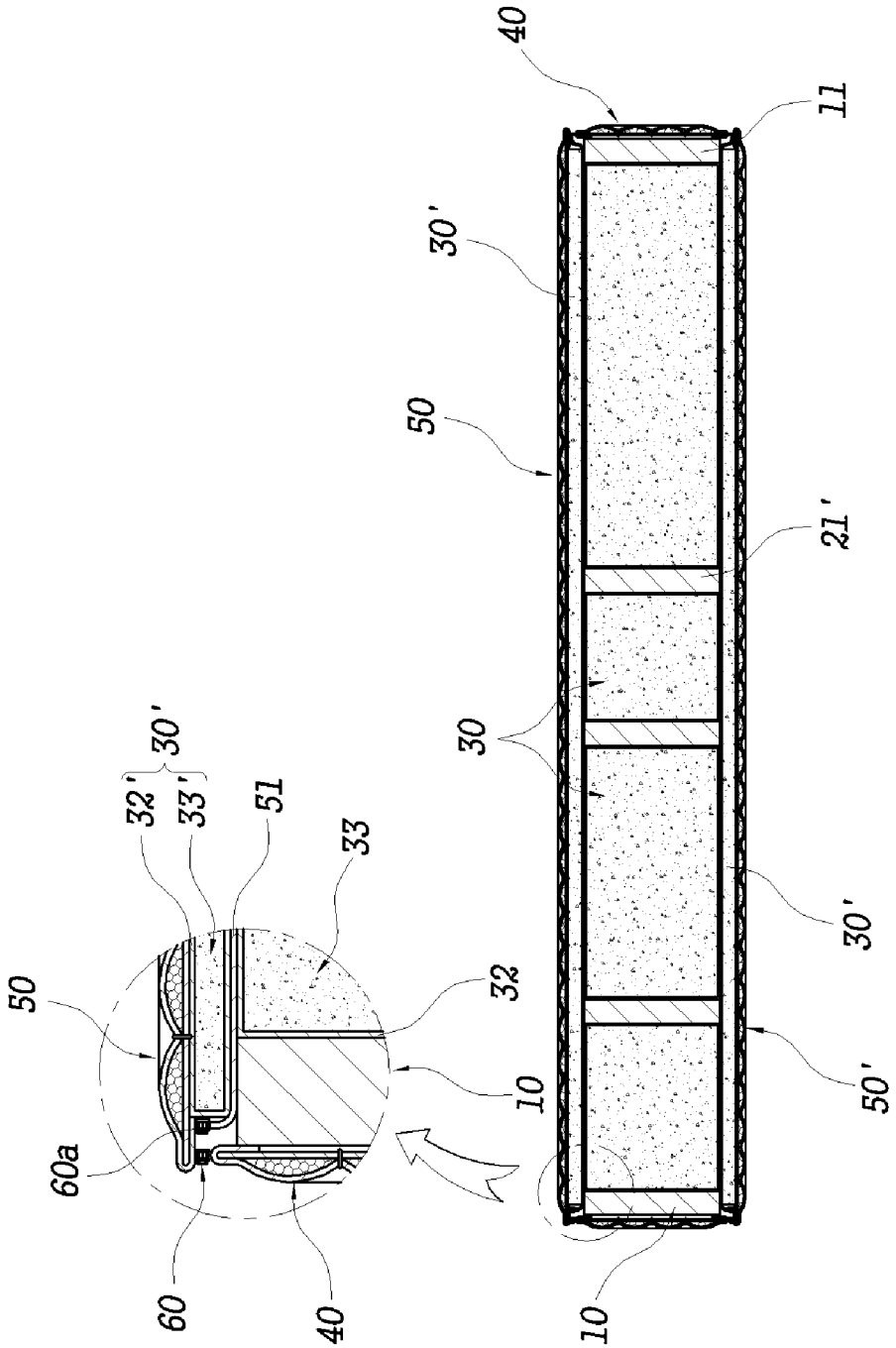

[Fig. 16]

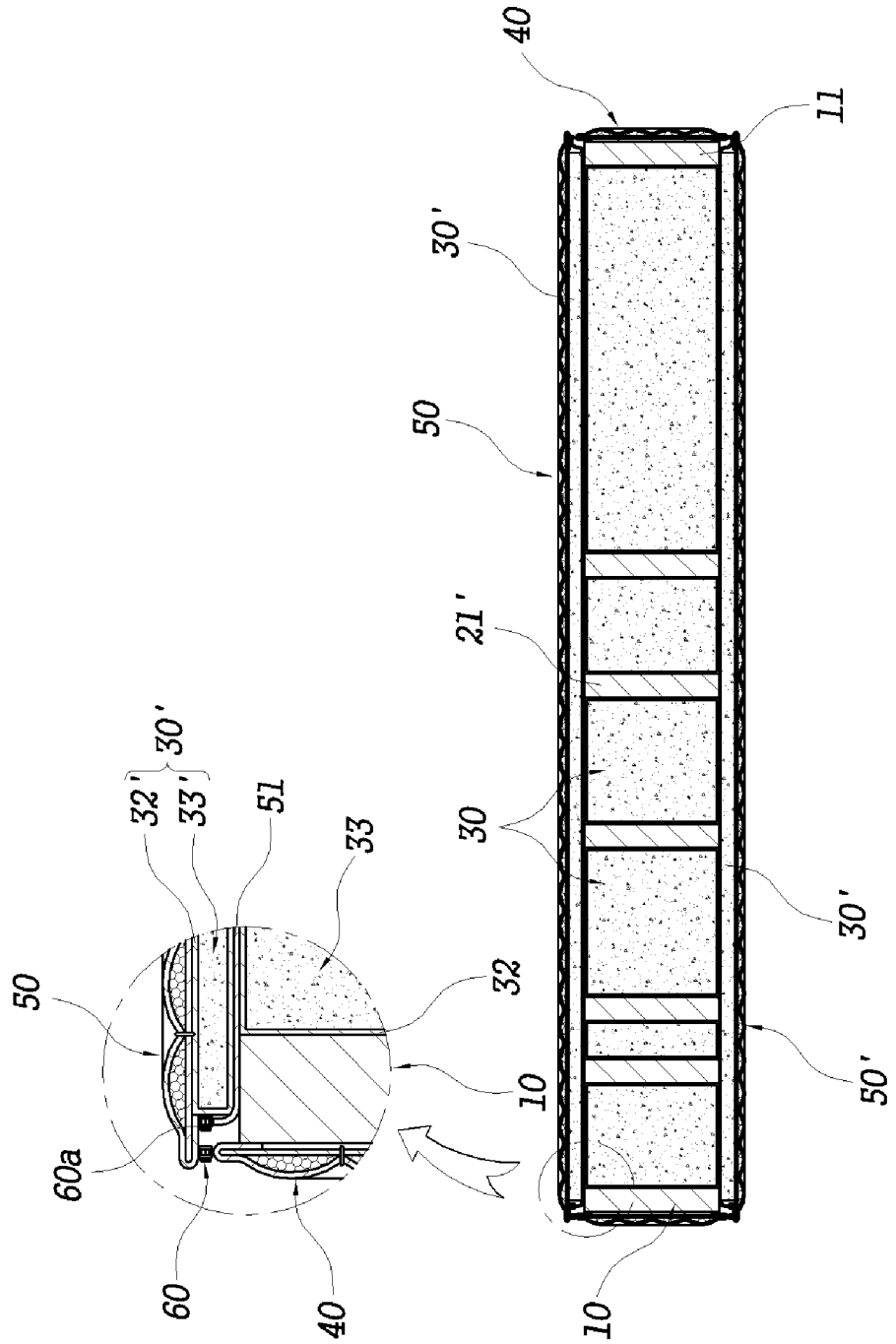

[Fig. 17]

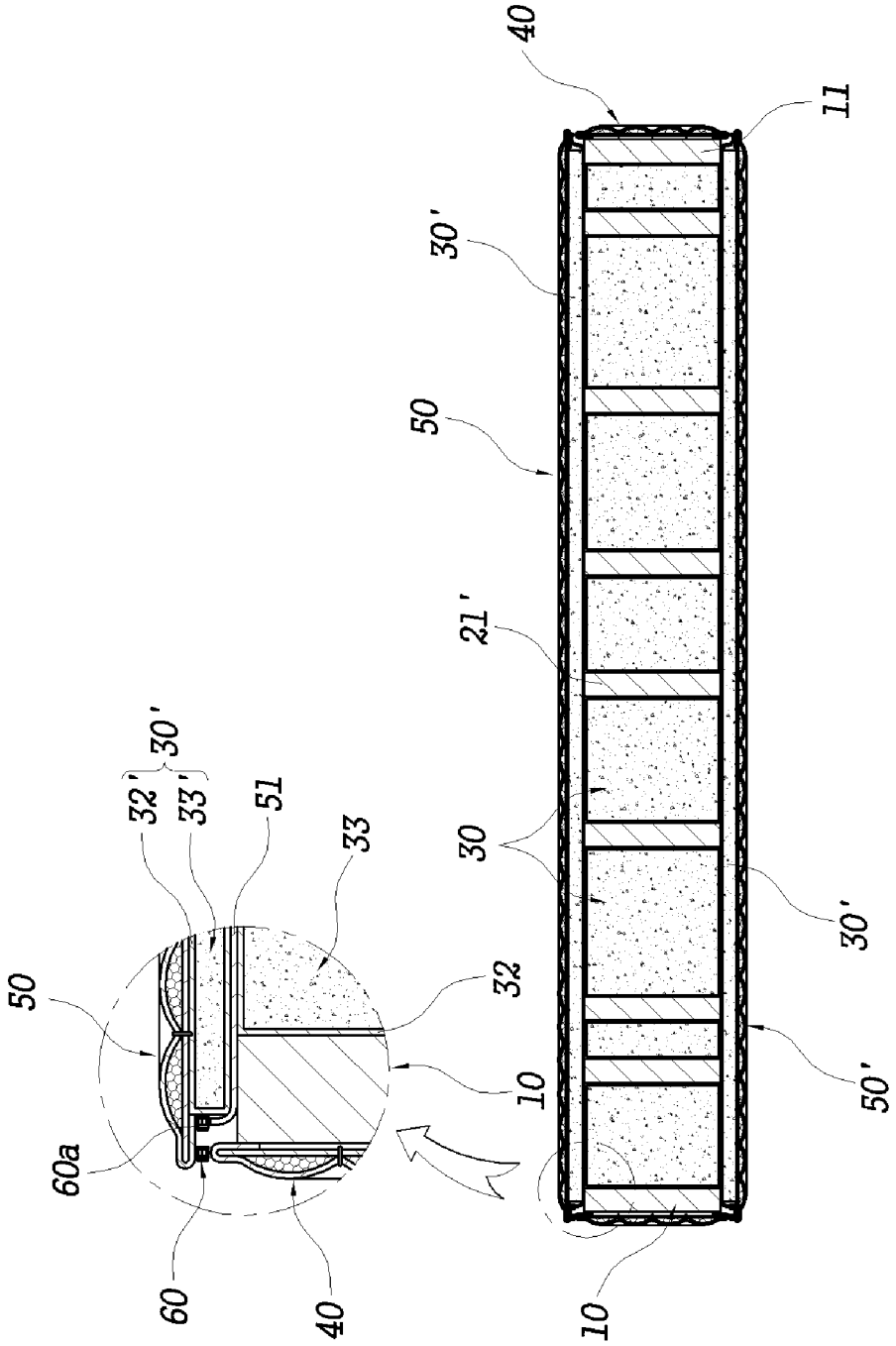

[Fig. 18]

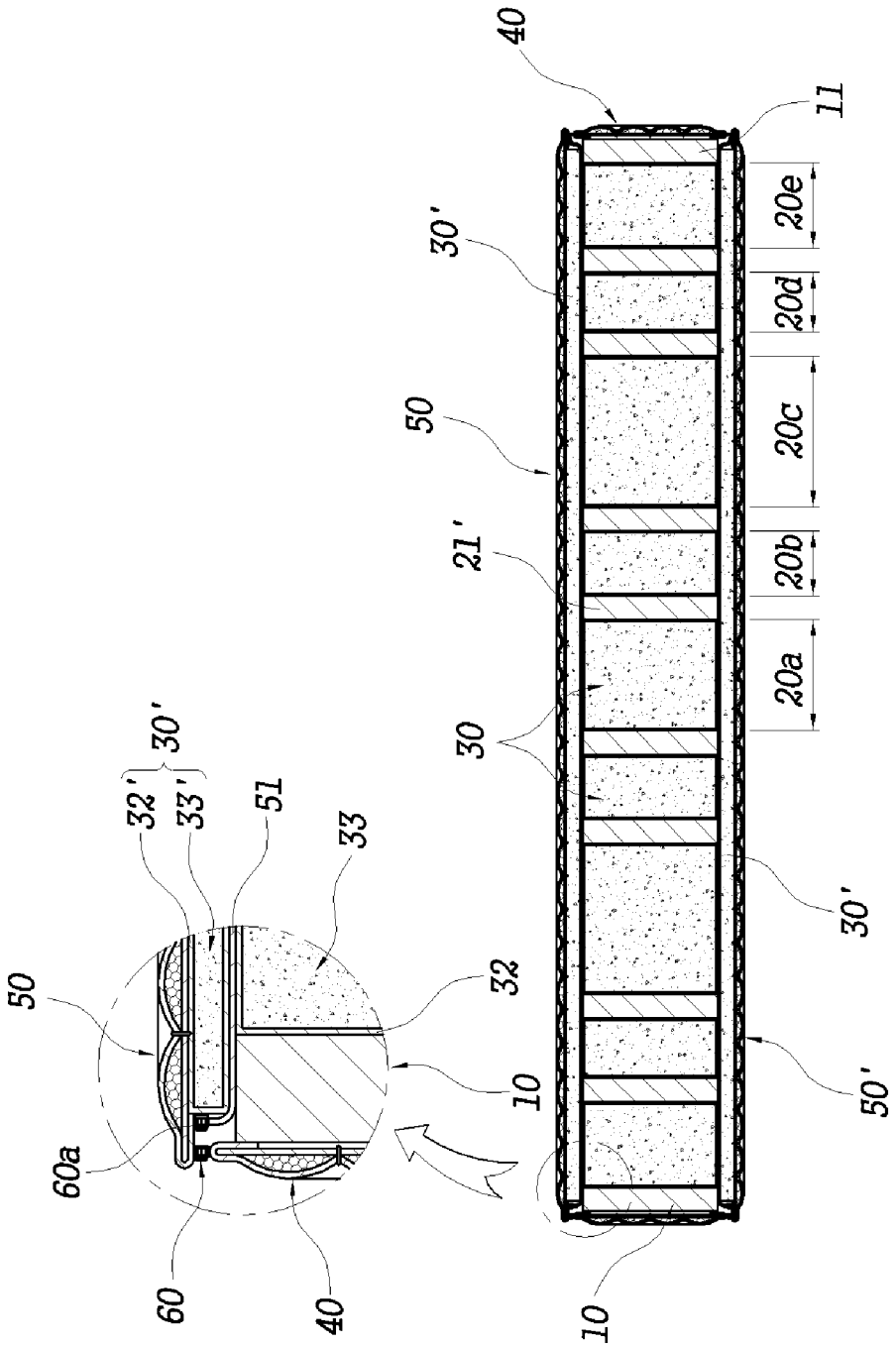
40
11
30'
20e
20d
50
20c
21'
20b
20a
30
30'
50'
10
32'
33'
30'
51
33
50
32
10
60a
60
40

[Fig. 19]

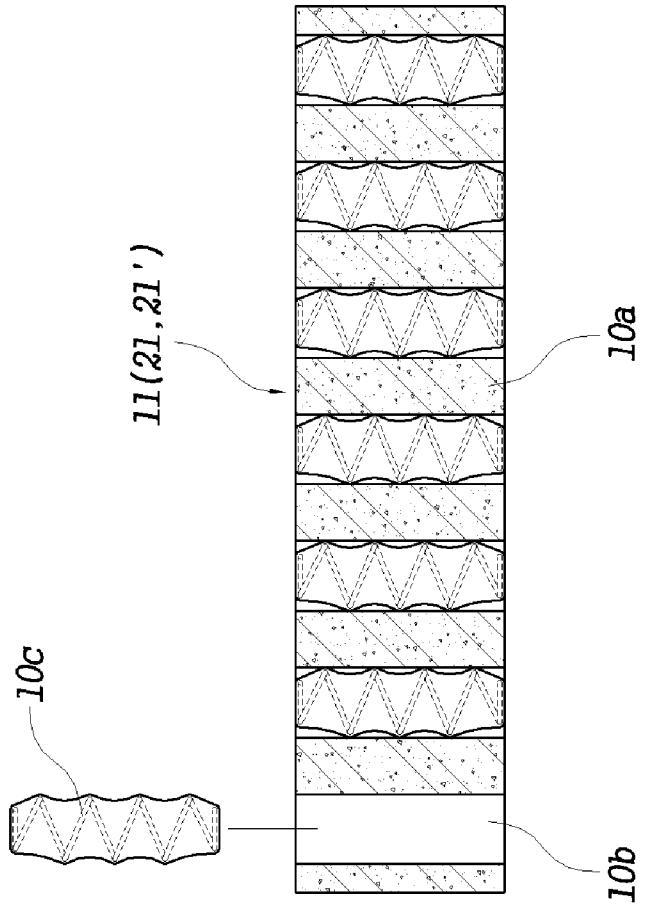

[Fig. 20]

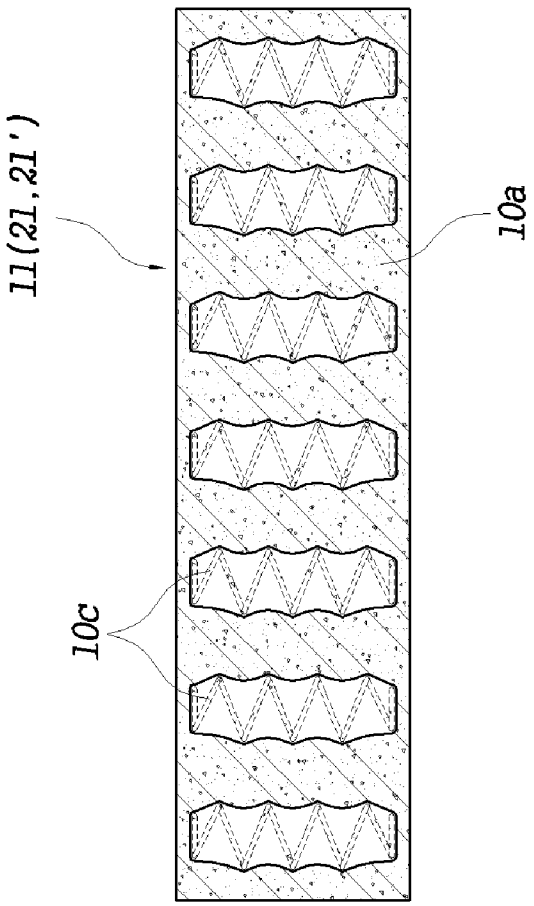

[Fig. 21]

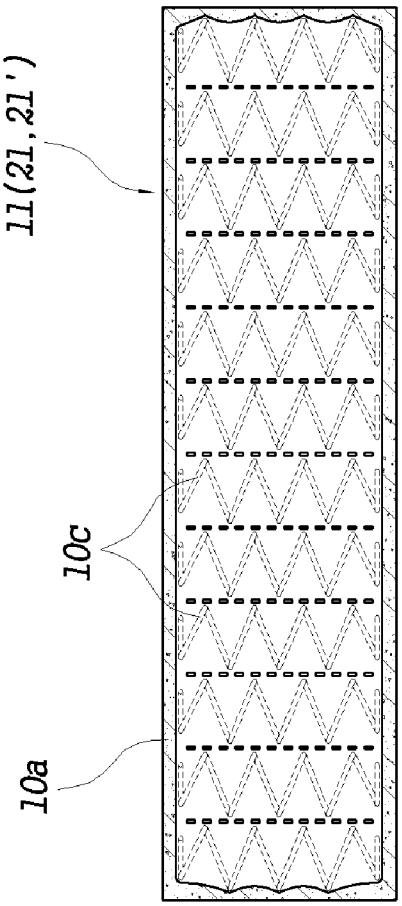

[Fig. 22]

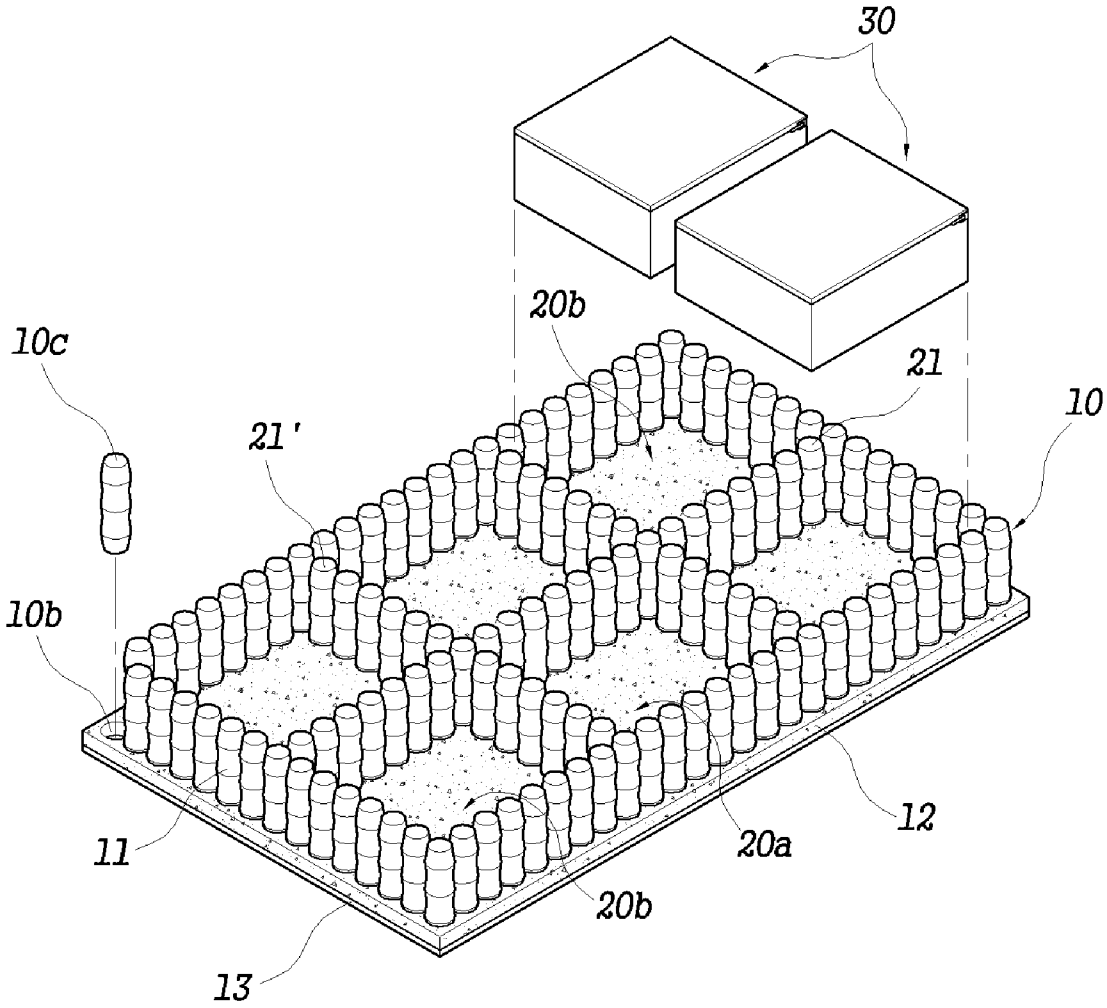

[Fig. 23]

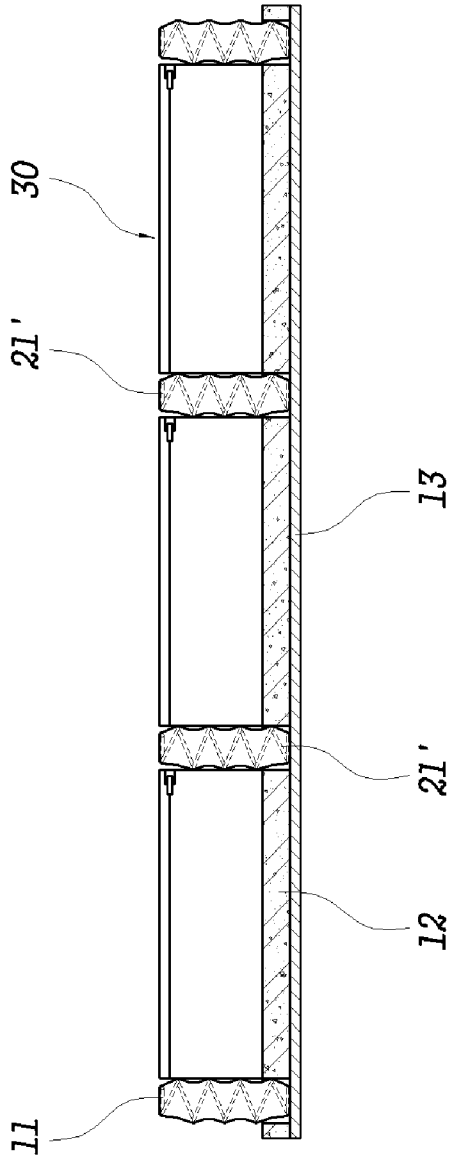

INTERNATIONAL SEARCH REPORT

International application No.
PCT/KR 2008/001709

A. CLASSIFICATION OF SUBJECT MATTER
IPC[8]: ***A47C 27/20*** (2006.01); ***A47C 27/14*** (2006.01); ***A47C 27/15*** (2006.01)
According to International Patent Classification (IPC) or to both national classification and IPC

B. FIELDS SEARCHED

Minimum documentation searched (classification system followed by classification symbols)
IPC[8]: A47C

Documentation searched other than minimum documentation to the extent that such documents are included in the fields searched

Electronic data base consulted during the international search (name of data base and, where practicable, search terms used)
WPI, EPODOC, DEPATISNET

C. DOCUMENTS CONSIDERED TO BE RELEVANT

Category*	Citation of document, with indication, where appropriate, of the relevant passages	Relevant to claim No.
X	WO 2005/002400 A1(FLEX EQUIPOS DE DESCANSO, S.A.) 13 January 2005 (13.01.2005) *claims ; Fig.1, Fig.2*	1-45
X	CA 2 290 244 A1(LOCKSHINCKY MEIER) 23 May 2000 (23.05.2000) *page 2, lines 20-25; claims; Figs.*	1-45
X	WO 2005/099520 A1(FLEX EQUIPOS DE DESCANSO, S.A.) 27 October 2005 (27.10.2005) *claims; Fig.1*	1-45

☒ Further documents are listed in the continuation of Box C. ☒ See patent family annex.

* Special categories of cited documents:
"A" document defining the general state of the art which is not considered to be of particular relevance
"E" earlier application or patent but published on or after the international filing date
"L" document which may throw doubts on priority claim(s) or which is cited to establish the publication date of another citation or other special reason (as specified)
"O" document referring to an oral disclosure, use, exhibition or other means
"P" document published prior to the international filing date but later than the priority date claimed
"T" later document published after the international filing date or priority date and not in conflict with the application but cited to understand the principle or theory underlying the invention
"X" document of particular relevance; the claimed invention cannot be considered novel or cannot be considered to involve an inventive step when the document is taken alone
"Y" document of particular relevance; the claimed invention cannot be considered to involve an inventive step when the document is combined with one or more other such documents, such combination being obvious to a person skilled in the art
"&" document member of the same patent family

Date of the actual completion of the international search	Date of mailing of the international search report
24 June 2008 (24.06.2008)	4 July 2008 (04.07.2008)

Name and mailing address of the ISA/ AT	Authorized officer
Austrian Patent Office Dresdner Straße 87, A-1200 Vienna	SEIRAFI M.
Facsimile No. +43 / 1 / 534 24 / 535	Telephone No. +43 / 1 / 534 24 / 224

INTERNATIONAL SEARCH REPORT

International application No.
PCT/KR 2008/001709

C (Continuation). DOCUMENTS CONSIDERED TO BE RELEVANT

Category*	Citation of document, with indication, where appropriate, of the relevant passages	Relevant to claim No.
A	US 2004 172 767 A1(L & P PROPERTY MANAGEMENT CO) 9 September 2004 (09.09.2004) *whole document*	1-45

INTERNATIONAL SEARCH REPORT

Information on patent family members

International application No.
PCT/KR 2008/001709

Patent document cited in search report	Publication date	Patent family member(s)	Publication date
WO A 2005002400		ES A1 2245877	2006-01-16
		ES A1 2242500	2005-11-01
		WO A1 2005002400	2005-01-13
CA A 2290244		CA A1 2290244	2000-05-23
		IL A 127197	2000-06-01
WO A 2005099520		WO A1 2005099520	2005-10-27
US A 2004172767		EP A1 1603434	2005-12-14
		WO A1 2004078001	2004-09-16
		AU A1 2003258243	2004-09-28
		US A1 2004172767	2004-09-09