Feb. 19, 1929. 1,702,641

A. C. BUTLER

DRAWING MECHANISM

Filed May 7, 1926

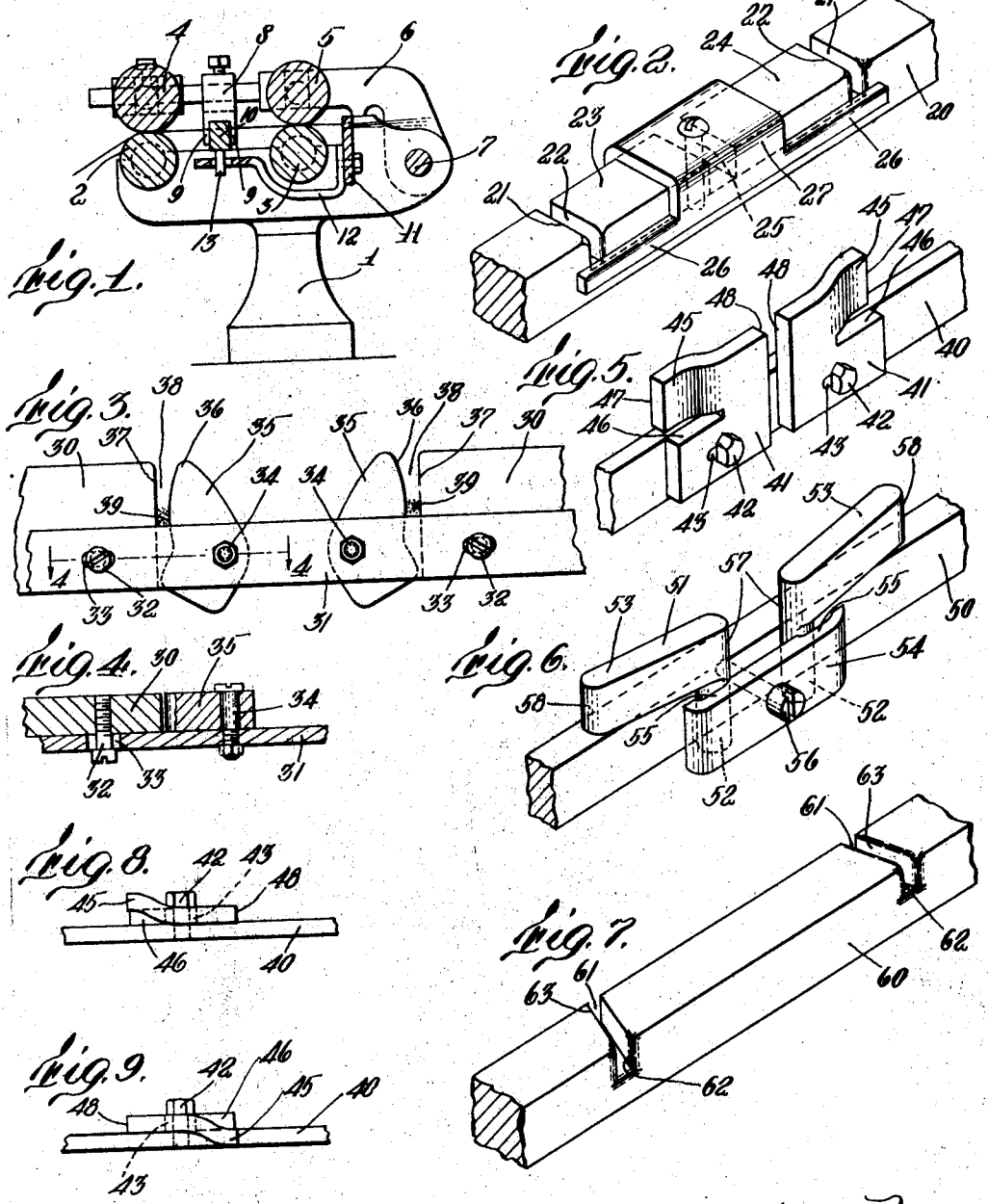

Inventor:
Arthur Cecil Butler
by
Clough & Brown Lumbye May
Attys.

Patented Feb. 19, 1929. 1,702,641

UNITED STATES PATENT OFFICE.

ARTHUR CECIL BUTLER, OF BOSTON, MASSACHUSETTS.

DRAWING MECHANISM.

Application filed May 7, 1926, Serial No. 107,427, and in Canada October 17, 1925.

This invention relates to mechanisms for drawing rovings and the like, and is more particularly concerned with the construction of a member for imparting a drawing resistance to the rovings as they pass through the mechanism. While not restricted to such use, the drawing members of the present invention have been designed more particularly for use in connection with drawing mechanisms such as are disclosed and claimed in my Patent No. 1,586,605, granted June 1, 1926, for drawing mechanisms, by which an unusually long draft between successive pairs of rollers may be produced by the use of a drawing member acting on the roving and positioned back of a roving feeding device in accordance with the length of the staple being drawn.

For a more complete understanding of this invention reference may be had to the accompanying drawings, in which—

Figure 1 is a somewhat diagrammatic view of a single roller stand to which this invention may be applied;

Figure 2 is a perspective view of one form of drawing member;

Figure 3 is a side elevation of another form;

Figure 4 is a detail section on line 4—4 of Figure 3;

Figures 5, 6 and 7 are perspectives of other forms of drawing member;

Figures 8 and 9 are detail plans showing the construction of Figure 5 in different adjusted positions.

Referring to Figure 1, 1 indicates conventionally a roller stand carrying front and rear lower drawing rollers 2 and 3, with which cooperate upper front and rear rollers 4 and 5, which are supported in any suitable manner, as by the cap bar 6 pivotally mounted as at 7 on the stand. Between the rollers 4 and 5, the cap bar has mounted thereon, preferably adjustable between these rollers 4 and 5, a bracket member 8 having its lower end slotted to form depending fingers 9, which may extend on either side of a drawing member 10 with which this invention is particularly concerned. If desired, this drawing member may be slidable between the fingers 9 and be given a traversing motion with the usual traverse bar 11 through connecting elements 12 and 13 and it is shown as positioned back of the forward rollers a distance substantially equal to or slightly less than the length of the mass of the fibers being drawn so as to define a parting point for the fibers, as more particularly described in my patent hereinbefore mentioned.

The roving to be drawn passes between the rear rollers 5 and 3, which constitutes the rear roving feeding means and into drawing engagement with the bar 10 before passing between the front rollers 2 and 4, which constitutes the forward roving feeding means, and in order that this bar may impose drafting resistance to the passage of the roving so as to define a parting point for the fibers, it is so made as to present an edge over which the roving passes, preferably this edge being formed by one or both sides of a suitable slot in the drawing member. In Figure 2, the drawing member is shown as constructed of a bar 20 having a portion of reduced height to form a relatively wide slot in its upper face defined by side walls 21 at either end of the reduced portion. Each of these walls 21 forms one side of a roving receiving slot, the opposite wall being formed by the adjacent face 22 of a block 23, which is positioned within the reduced portion of the bar 20 and is shown as fixed in this portion by means of a clamping cap 24 of channel section engaging over adjacent ends of the blocks 23 and held to the bar 20 in clamping relation to the blocks 23 as by means of a screw 25 passing through the cap 24 and having threaded engagement at its lower end in the bar 20, this screw passing between the blocks 23. By loosening this screw, the blocks 23 may be adjusted toward and from each other to determine the width of the roving receiving slots formed between their end walls 22 and the wall portion 21 of the bar 20 in accordance with the staple to be drawn. In order to prevent any of the fibers of the roving from entering in between the blocks 23 and the upper face of the reduced portion of the bar 20, guard means may be employed. While these means might be made in various ways, as shown they are formed as extensions 26 from the lower edge of a side wall 27 of the cap 24, the upper edges of these extensions being positioned above the engaging surfaces of the blocks 23 and the bar 20 and extending across the lower ends of

the slots 22 so as to bridge over any cracks between the blocks and the bar into which any of the fibers of the roving might find their way.

In Figures 3 and 4 another form of bar is shown, in which the width of the roving receiving slots is automatically adjustable. The bar as shown in these figures comprises portions 30 connected in spaced relation by portions 31 of reduced height, as shown, the spacing of the portions 30 being adjustable by attaching the portions 31 thereto by screws 32 passing through slots 33 in the member 31 and threaded into the members 30. Pivoted to the member 31 between the members 30 at 34 are a pair of dogs 35 having edge portions 36 positioned opposite to the ends 37 of the members 30 and defining therewith slots 38 for reception of the rovings shown at 39. The dogs 35 are so formed as to tend by their weight to swing in directions to bring their edges 36 toward the edges 37 of the bars 30, thus closing the slots onto the rovings passing therethrough.

In Figure 5 is shown a still different form of member in which a bar 40 has adjustably fixed thereto pairs of blocks 41, as by means of bolts 42 threaded in the bar 40 and passing through elongated slots 43 in the blocks. These blocks have upper portions 45 partially severed from their lower portions by slots 46, these upper portions being bent out of the planes of the lower portions to form the vertical shoulders 47 at their ends. These blocks may be positioned on the bar 40 in various relations, certain of these relations being shown in Figures 5, 8 and 9. The blocks may be fixed on either side face of the bar 40 so that the edges 47 and 48 thereof may be positioned at different distances between the pair of rollers of a drawing stand, as shown in Figure 1, without requiring any adjustment of the bar 40 itself. For example, in Figure 5, the blocks are shown as fixed to the rear face of the bar 40 with their portions 45 in substantially vertical alinement with the bar 40. In Figure 8, one of these blocks is shown as fixed to the forward face of the bar 40 with its edge portion 45 so turned as to project still further forwardly thereof, while in Figure 9 one block is shown as fixed to the forward face of the bar 40 with its edge 45 extended rearwardly so as to be in substantially vertical alinement with the bar 40. These edges 45 may serve as bearings for the rovings, as also may the edges 48. The blocks may be positioned so that either the edges 48 are adjacent to each other to define a slot therebetween or the edges 45 may define such a slot. By this means not only may the width of the slot be adjusted, but also the effective positioning of the drawing edge of the drawing member may be adjusted lengthwise between the pairs of drawing rollers between which the member is used, without requiring adjustment of the drawing member as a whole.

In Figure 6 a still further modification is shown, in which the drawing member comprises a bar 50 and a pair of blocks 51 which may be clamped thereto in various relations. As shown, each of the blocks 51 has a depending shank member 52 of substantially circular cross section, which may extend along either the forward or rearward vertical face of the bar 50, while the upper portions 53 of the blocks may extend over the upper face of the bar 50 in any desired angular relation thereto. These blocks are shown as clamped to the bar 50 by means of a plate 54 having vertically arranged grooves or channels 55 therein of greater width than the portions of the shanks 52 engaged thereby, so that these shanks may be moved bodily along the bar 50 while remaining within the channels. The clamping member 54 may be fixed to the bar 50 as by means of a screw 56 passing therethrough and threaded into a suitable opening in the bar 50. Either the inner adjacent edges 57 or the remote edges 58 of the blocks 51 may be used as edges against which the rovings are drawn to effect the drafting resistance to their passage.

In Figure 7 still another construction of drawing member is shown, in which an effective adjustment of the width of the roving receiving slot is produced without, however, actually requiring positive adjustment of portions of the drawing member relative to each other. Referring to this figure, it will be seen that the bar 60 is provided with slots 61 extending thereacross, these slots being out of right angular relationship to the longitudinal axis of the bar 60. They are thus also out of alinement with the general direction of the passage of the roving therethrough which is transverse to the length of the bar 60. Thus the roving engages on one side of the slot, as at 62, where it enters the slot and engages the opposite side, as at 63, where it leaves the slot. The force with which it engages these edges, and thus the resistance imparted thereby to the passage of the roving, is dependent on the size of the roving passing through the slot and also on the tension with which the roving is drawn, these being determined by the characteristics of the roving in accordance with which adjustments of the drawing portions are required, and thus the action of the drawing member of this construction on the rovings automatically varies the action of the drawing member thereon in the desired relation. This member is thus effectively adjustable with relation to the roving without requiring any actual relative movement of any of its parts.

Having thus described certain embodiments of this invention, it should be evident to those skilled in the art that various

changes and modifications might be made therein without departing from its spirit or scope as defined by the appended claims.

I claim:

1. A drawing member comprising a bar having a portion of reduced dimensions to define a wide slot, and members positioned within said wide slot and defining with the side walls thereof a pair of narrower roving receiving slots.

2. A drawing member comprising a bar having a portion of reduced dimensions to define a wide slot, and members movable and positioned within said wide slot and defining with the side walls thereof a pair of narrower roving receiving slots each adjustable in width.

3. A drawing member comprising a bar having a reduced portion to define a wide slot, and a member positioned within the width of said slot and defining with one wall thereof a narrower roving receiving slot.

4. A drawing member comprising a bar having a reduced portion defining a wide slot, a block seated in said wide slot portion, and means for clamping said block in said slot portion spaced from one wall thereof to define a narrower roving receiving slot.

5. A drawing member comprising a bar having a reduced portion defining a wide slot, a block seated in said wide slot portion, and means for clamping said block in said slot portion spaced from one wall thereof to define a narrower roving receiving slot, said drawing member comprising an element bridging adjacent portions of said block and bar to prevent the entry of roving fibers therebetween.

6. A drawing member comprising a bar having a reduced portion forming a wide slot, a pair of blocks seated in said slot, a cap engaging over said blocks, and a clamping element extending from said cap to said bar between said blocks and by which said blocks may be clamped beneath said cap with their non-adjacent ends defining with opposite walls of said wide slot narrower roving receiving slots.

7. A drawing member comprising a bar having a reduced portion forming a wide slot, a pair of blocks seated in said slot, a cap engaging over said blocks, and a clamping element extending from said cap to said bar between said blocks and by which said blocks may be clamped beneath said cap with their non-adjacent ends defining with opposite walls of said wide slot narrower roving receiving slots, said cap having extensions bridging adjacent portions of said blocks and bar and the lower ends of said roving receiving slots to prevent roving fibers from passing between said adjacent portions.

8. A drawing mechanism comprising forward and rear roving feeding means, and a drawing member having an adjustable roving engaging edge portion positioned between said means and at such a distance from said forward means as to define a parting point for the fibers.

9. A drawing mechanism comprising forward and rear roving feeding means and a drawing member having a slot of adjustable width through which the roving passes, positioned back of said forward feeding means by substantially the length of the mass of the fibers being drawn.

In testimony whereof I have affixed my signature.

ARTHUR CECIL BUTLER.