Oct. 16, 1928. 1,687,488

H. K. BECKER ET AL

PACKAGE WRAPPING AND BANDING MACHINE

Filed March 30, 1927 7 Sheets-Sheet 1

Fig. 1.

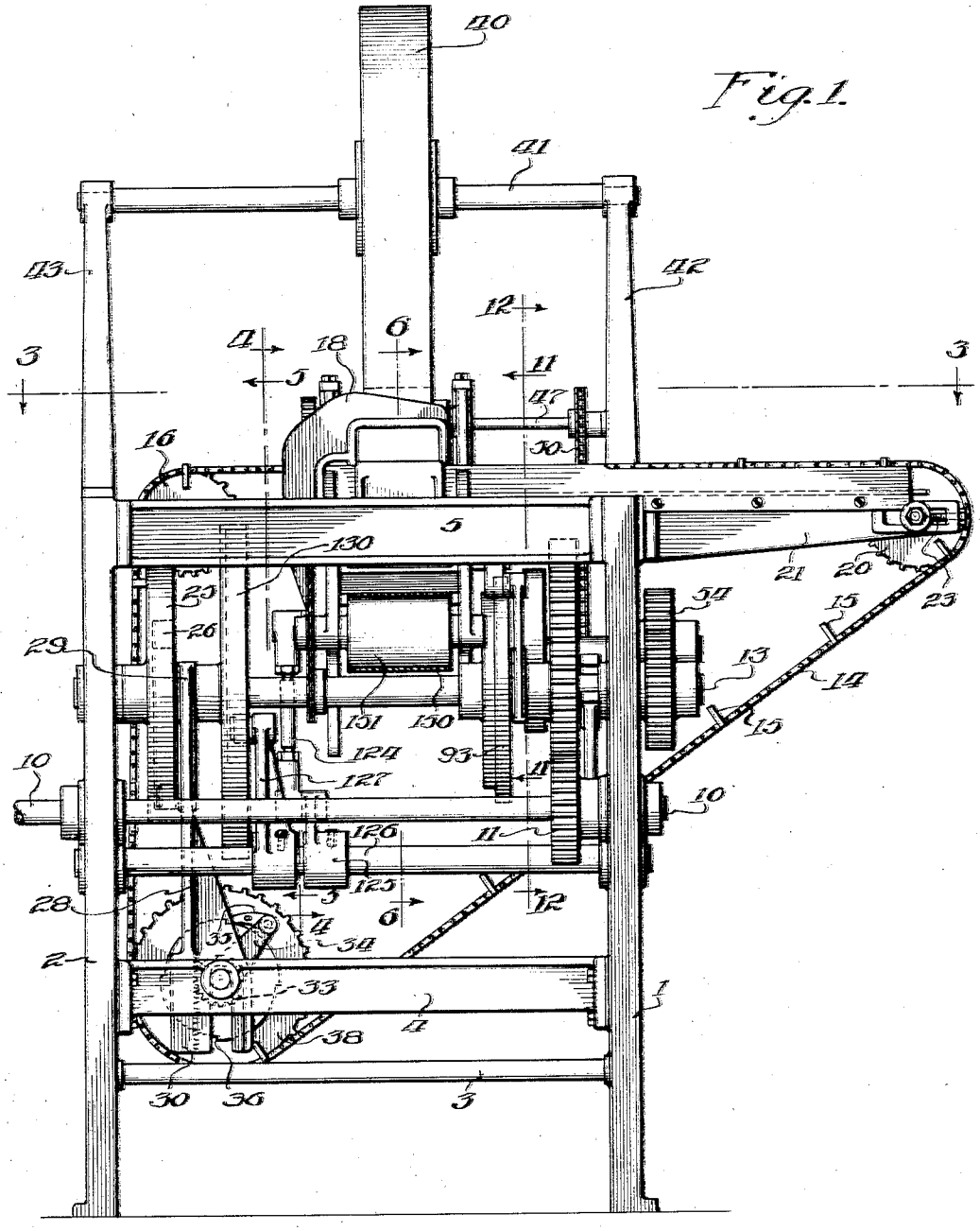

Witnesses
Arthur M. Frambe.
Wm. E. Hamm.

Inventors
Hazen Kirke Becker
and Emil G. Jurgens.
By Rummler & Rummler
Attys.

Oct. 16, 1928. 1,687,488

H. K. BECKER ET AL

PACKAGE WRAPPING AND BANDING MACHINE

Filed March 30, 1927 7 Sheets-Sheet 2

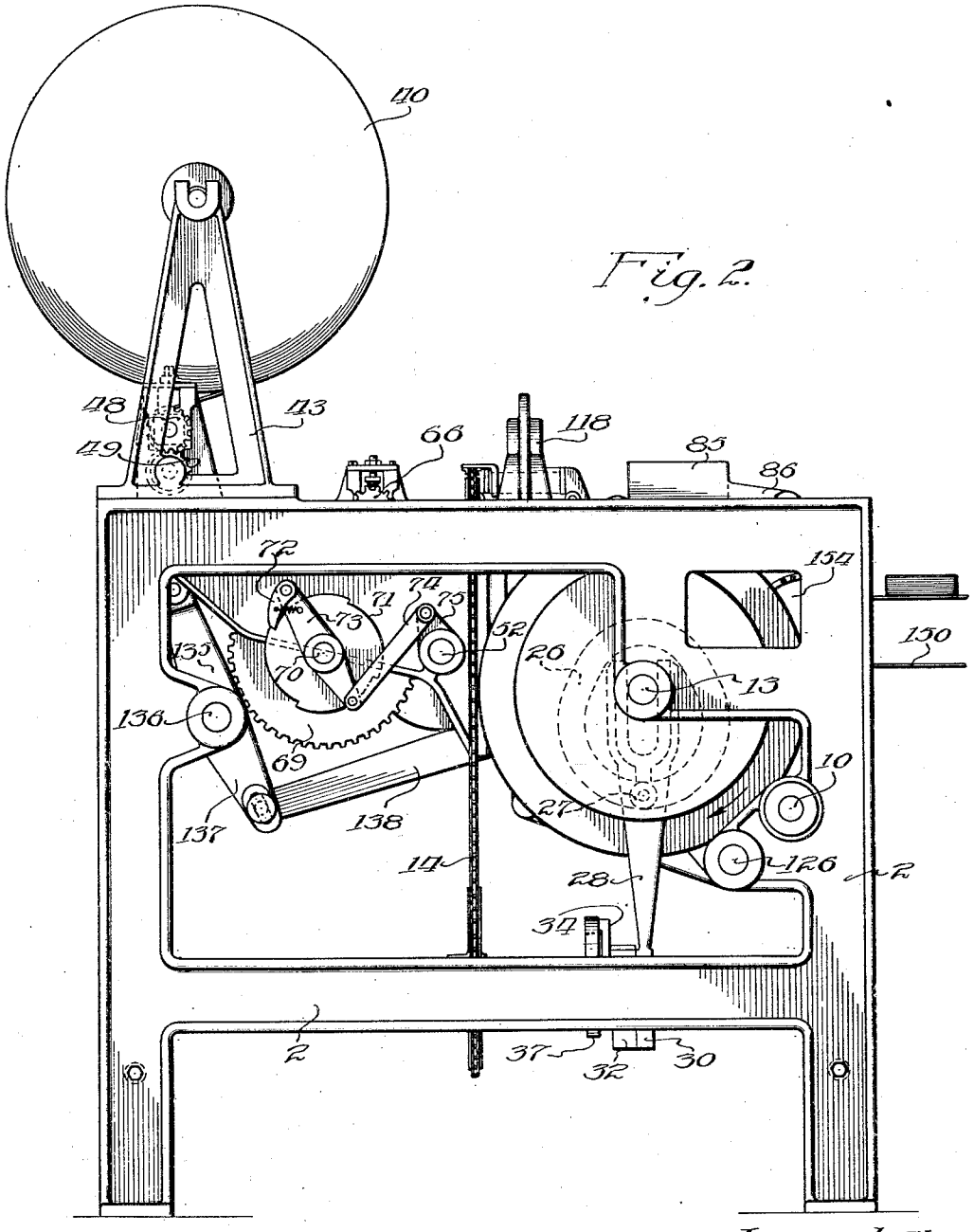

Fig. 2.

Witnesses
Arthur M. Franke.
Wm E. Hann.

Inventors:
Hagen Kirk Becker
and Emil G. Jurgens
By Rummler & Rummler
Attys:

Oct. 16, 1928. 1,687,488

H. K. BECKER ET AL

PACKAGE WRAPPING AND BANDING MACHINE

Filed March 30, 1927 7 Sheets-Sheet 3

Fig. 3.

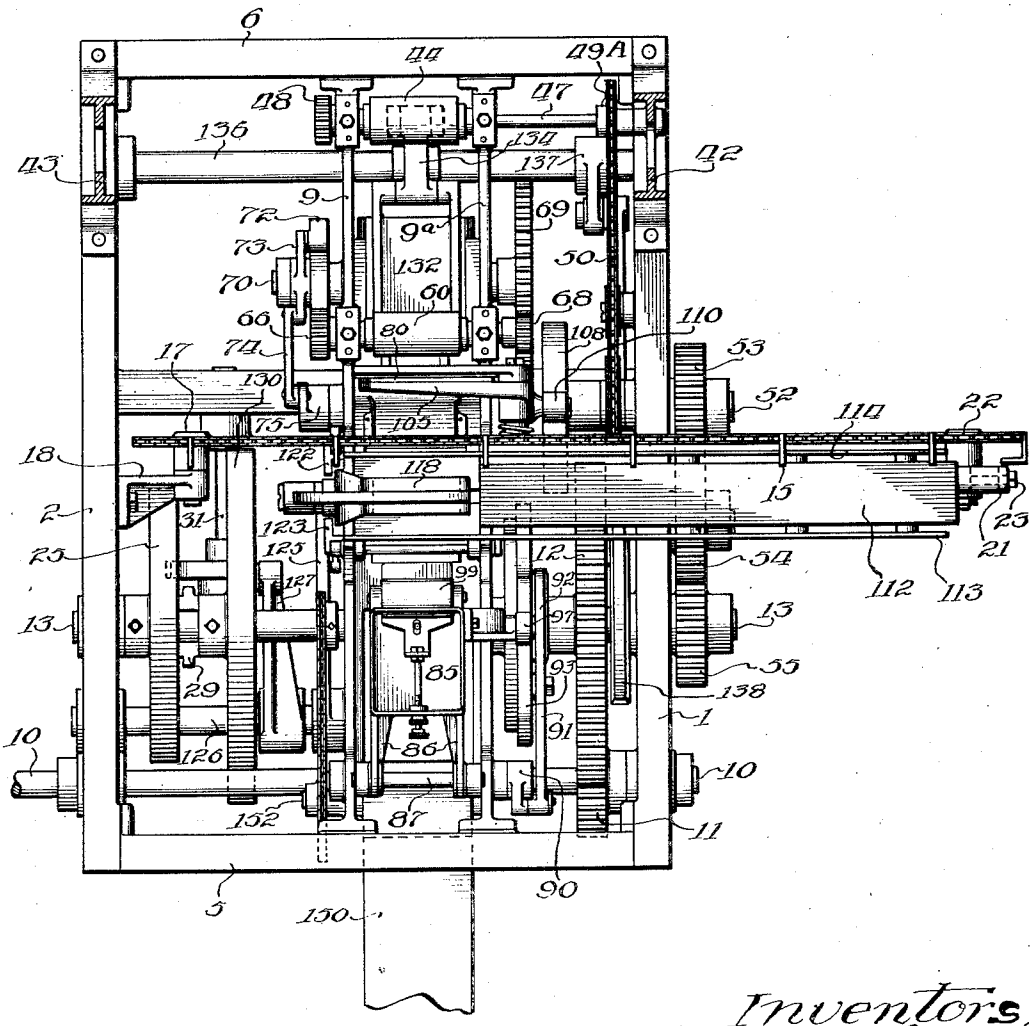

Witnesses
Arthur M. Franke.
Wm. E. Hanna.

Inventors.
Hazen Kirke Becker
and Emil G. Jurgens
By Rummler & Rummler
Attys.

Oct. 16, 1928. 1,687,488

H. K. BECKER ET AL.

PACKAGE WRAPPING AND BANDING MACHINE

Filed March 30, 1927 7 Sheets-Sheet 4

Fig. 4.

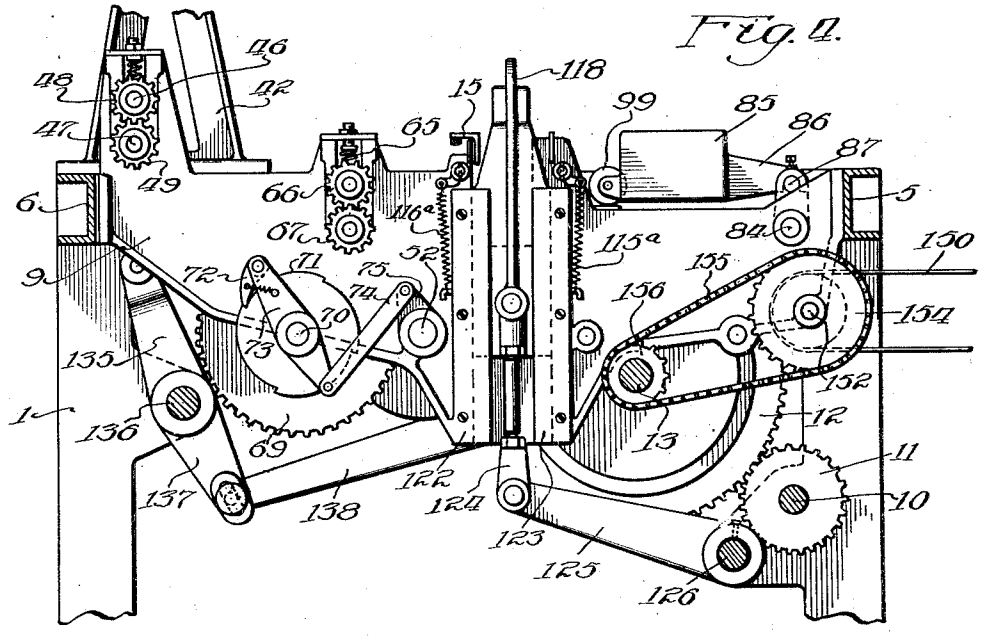

Fig. 5.

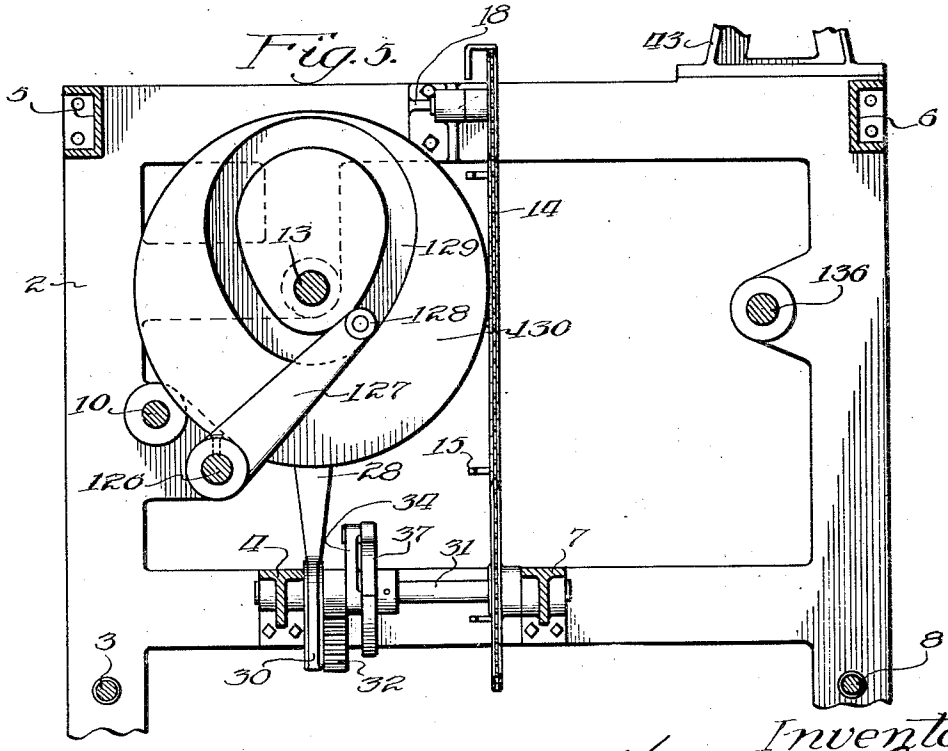

Witnesses
Arthur M. Franke.
Wm. E. Hamm.

Inventors
Hagen Kirk Becker
and Emil G. Jurgens
By Rummler & Rummler
Attys:

Oct. 16, 1928. 1,687,488

H. K. BECKER ET AL

PACKAGE WRAPPING AND BANDING MACHINE

Filed March 30, 1927 7 Sheets-Sheet 5

Fig. 6.

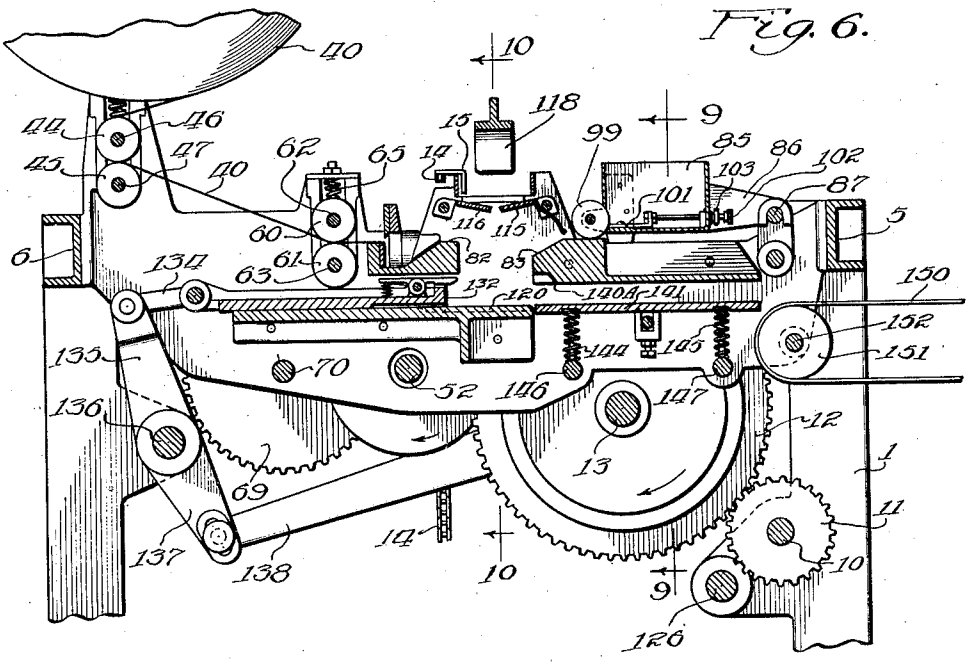

Fig. 7.

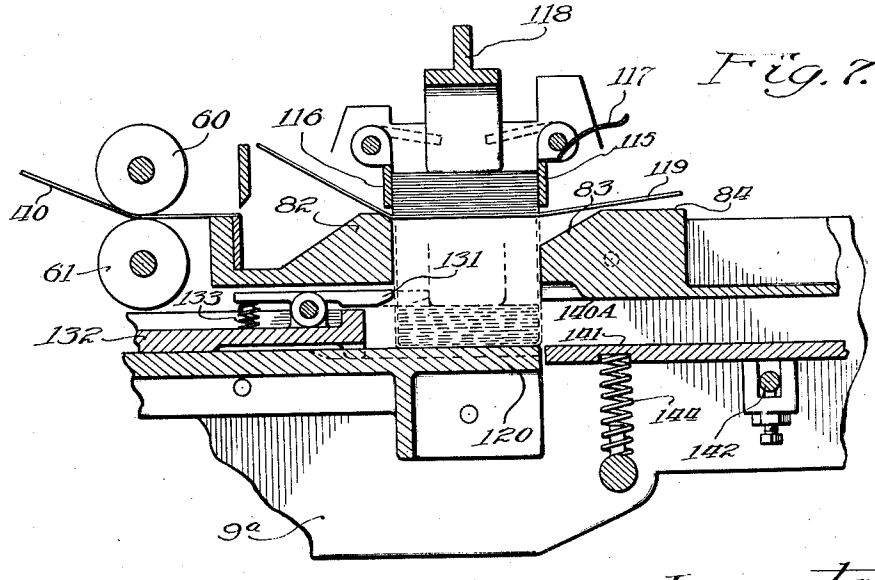

Witnesses
Arthur M. Franke.
Wm. E. Hahn.

Inventors
Hagen Kirke Becker
and Emil G. Jurgens
By Rummler & Rummler
Attys.

Oct. 16, 1928. 1,687,488

H. K. BECKER ET AL

PACKAGE WRAPPING AND BANDING MACHINE

Filed March 30, 1927 7 Sheets-Sheet 6

Fig. 8.

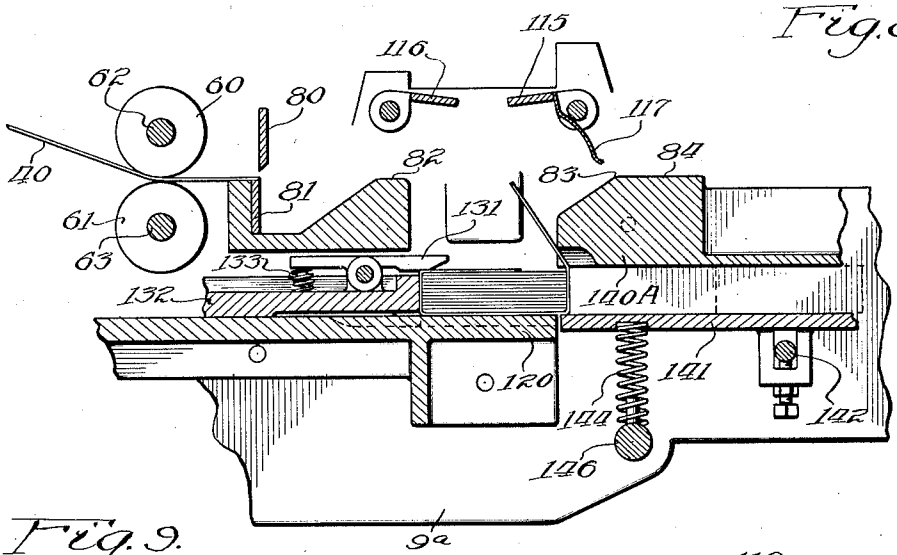

Fig. 9.

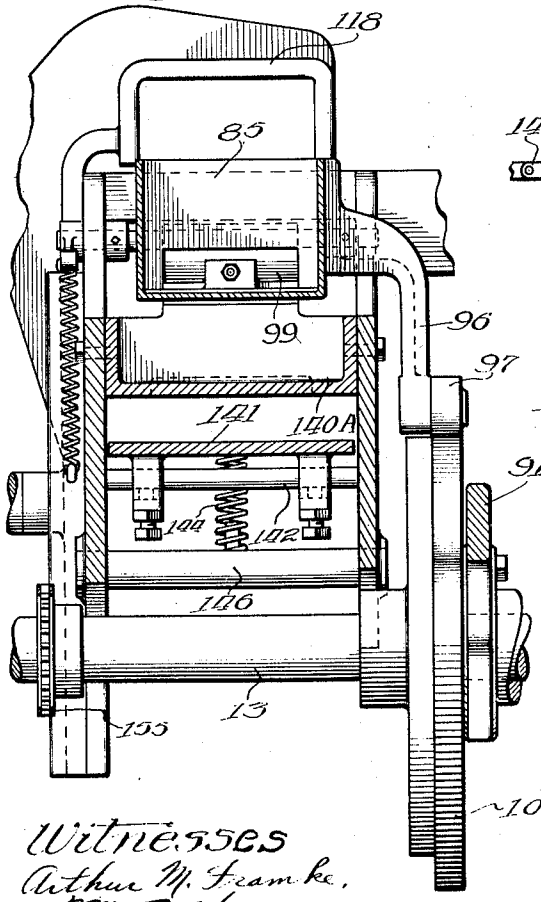

Fig. 10.

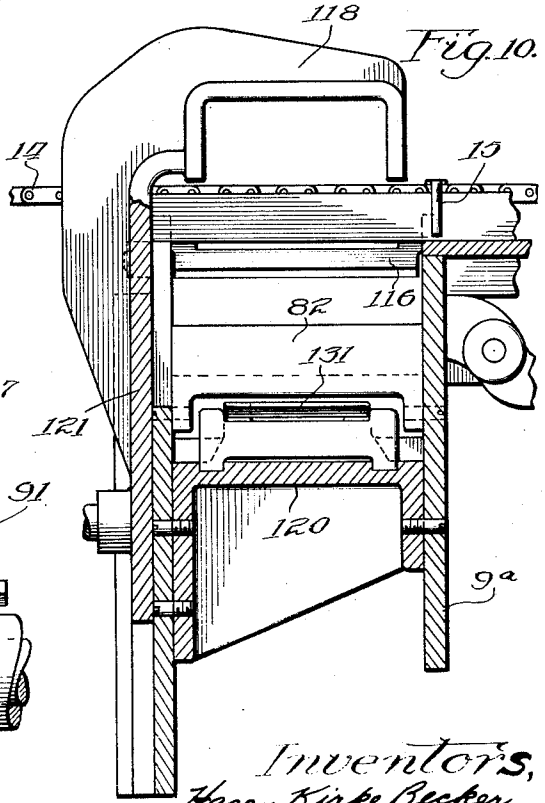

Witnesses
Arthur M. Framke,
Wm. E. Hann.

Inventors,
Hazen Kirke Becker
and Emil G. Jurgens,
BY Rummler & Rummler,
Attys.

Oct. 16, 1928. 1,687,488

H. K. BECKER ET AL

PACKAGE WRAPPING AND BANDING MACHINE

Filed March 30, 1927 7 Sheets-Sheet 7

Fig. 11.

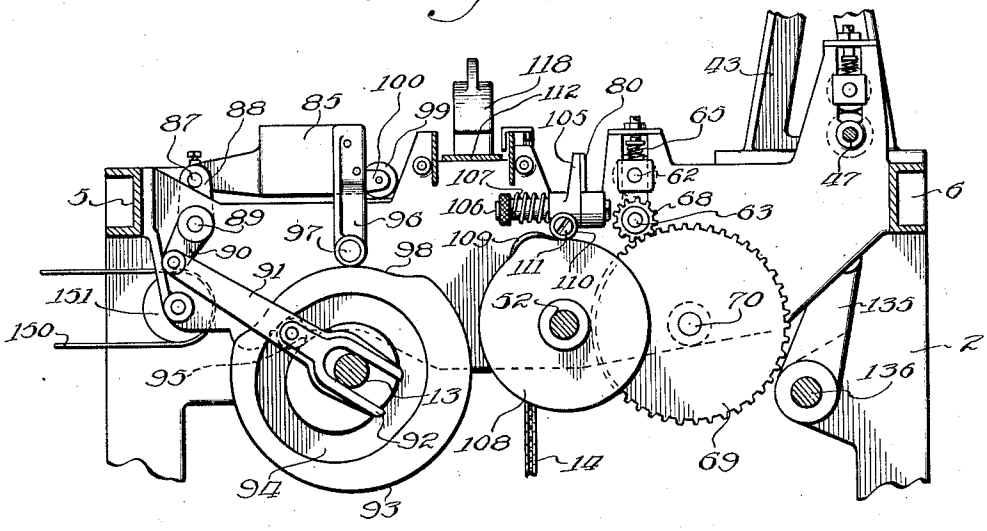

Fig. 12.

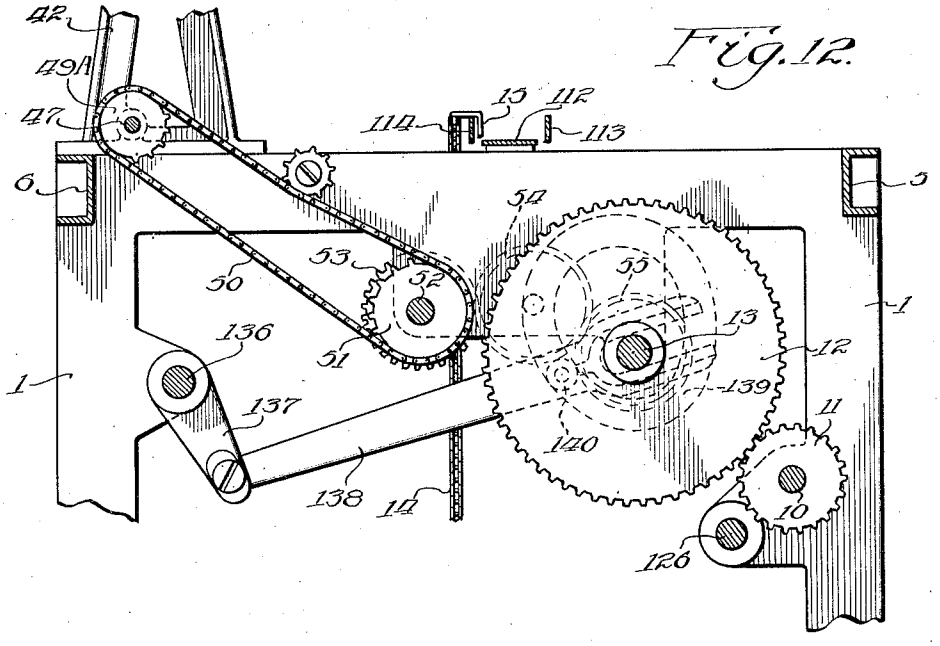

Witnesses
Arthur M. Franke.
M. E. Hann.

Inventors,
Hazen Kirke Becker
and Emil G. Jurgens,
By Rummler & Rummler.
Attys.

Patented Oct. 16, 1928. 1,687,488

UNITED STATES PATENT OFFICE.

HAZEN KIRKE BECKER AND EMIL G. JURGENS, OF CHICAGO, ILLINOIS, ASSIGNORS TO PETERS MACHINERY COMPANY, OF CHICAGO, ILLINOIS, A CORPORATION OF ILLINOIS.

PACKAGE WRAPPING AND BANDING MACHINE.

Application filed March 30, 1927. Serial No. 179,568.

This invention relates to machines for automatically wrapping and sealing packages.

The main objects of this invention are to provide a machine that will automatically move into position the packages to be wrapped, supply a strip of wrapping tape in position to receive the package, place glue on one end of the end of the strip of tape, wrap the strip of tape around the package and press the glued end of the tape against the unglued end thereof and then discharge the wrapped packages from the machine; and to provide a machine of this character that is rapid in operation, durable in construction and automatic in operation.

An illustrative embodiment of this invention is shown in the accompanying drawings, in which:

Figure 1 is an end elevation of the complete machine.

Fig. 2 is a side elevation of the same.

Fig. 3 is a top plan view of the machine, partly in section, taken on the line 3—3 of Fig. 1.

Fig. 4 is a fragmentary sectional elevation taken on the line 4—4 of Fig. 1.

Fig. 5 is a vertical section taken on the line 5—5 of Fig. 1.

Fig. 6 is a vertical section taken on the line 6—6 of Fig. 1.

Fig. 7 is an enlarged fragmentary sectional detail of the folding mechanism and adjacent parts with the package to be wrapped in the process of being shifted downwardly and the same package shown in dotted outline in its full downward shifted position.

Fig. 8 is a view of the same with the package at the beginning of its horizontal shifting.

Fig. 9 is a section taken on the line 9—9 of Fig. 6.

Fig. 10 is a section taken on the line 10—10 of Fig. 6.

Fig. 11 is a section taken on the line 11—11 of Fig. 1.

Fig. 12 is a section taken on the line 12—12 of Fig. 1.

The packages to be wrapped for which this machine is particularly designed are packages of 3″ x 5″ index cards which usually contain 100 cards to the package. These packages of loose cards are fed intermittently by an endless chain conveyor to a position on the machine which is directly above and spaced away from the place where binding tape is supplied. This binding tape is carried on the machine in the form of a large roll of paper. Suitable lengths of this paper tape are fed to a position directly beneath the package. One end of the tape is glued and then the length is severed from the supply. The package to be wrapped is then depressed down on to the medial portion of the severed length of paper and carried between a pair of spaced shoulders which fold the two ends of the tape up against the sides of the package of cards.

A horizontally movable pusher bar which carries a forwardly projecting folding finger, then folds the unglued end of the tape down on to the top side of the package and thereafter shifts the entire package edgewise between a stationary shoulder and a yielding table in such manner that the shoulder folds the glued end of the tape down on to the unglued end thereof, the yielding support pressing the ends of the tape together to seal them.

The following packages shifted by the pusher discharge the packages from the machine on to a continuously moving belt conveyor.

In the construction shown in the drawings, the machine comprises a pair of side frames 1 and 2 connected together by end bars 3, 4, 5, 6, 7 and 8. A pair of sub-frames 9 and 9ª are mounted on the cross pieces 5 and 6 intermediate the side frames 1 and 2, and parallel therewith.

A drive shaft 10 journaled in suitable bearings on the side frames 1 and 2 carries a pinion gear 11 keyed thereto, which meshes with a gear 12 keyed on a shaft 13, journaled on the side frames.

Means are provided for supplying the packages to be wrapped and comprise an intermittently driven endless chain 14, which is provided at equally spaced distances with pusher fingers 15. The chain 14 passes over an idler sprocket 16, journaled on a headed pin 17, which is rigidly carried by a bracket 18 bolted on side frame 2, adjacent the upper inner edge thereof. Another idler 20 for the chain 14 is adjustably mounted adjacent the outer end of a horizontally disposed

bracket arm 21, bolted to the side frame 1, adjacent the upper outside edge thereof. The outer end of the arm 21 is slotted to receive the shank of a pin 22, which carries the idler sprocket 20. Adjustability of the positioning of the sprocket is secured by a set screw 23, threaded in the outer end of the arm 21.

Means for driving the chain 14 intermittently are provided and comprise a cam disk 25 keyed on shaft 13. One face of the disk is provided with a cam groove 26, which receives a roller 27 mounted on a drive bar 28. The upper end of the drive bar is bifurcated to form a yoke 29, which embraces the opposite sides of the shaft 13. The lower end of the drive bar 28 is bifurcated to form a yoke 30 disposed at right angles to the upper yoke 29. The yoke 30 embraces the opposite sides of a sub-shaft 31 journaled in the cross members 4 and 7. A gear rack 32 is carried by the yoke 30 and the teeth thereof mesh with the pinion teeth 33 formed on the hub of an arm 34 carried on shaft 31. The outer end of the arm 34 is provided with a pawl 35 which engages the ratchet teeth 36 formed on the outer surface of a disk 37, which is keyed to shaft 31. A chain sprocket wheel 38 is keyed on shaft 31 to receive the endless chain 14 and impart motion thereto.

A supply of paper wrapping tape 40 in the form of a roll is carried on a bar 41, which is detachably supported on a pair of upstanding arms 42 and 43 mounted on the top of side frames 1 and 2 respectively, adjacent one end thereof. Tape from the roll passes between a pair of feed rollers 44 and 45, which are mounted on shafts 46 and 47 respectively, journaled in the sub-frames 9 and 9^a. The upper shaft 46 is slidably mounted in vertical slots in the sub-frames and springs normally urge the roller 44 downwardly into contact with the lower roller 45. One end of the shaft 47 is provided with a pinion gear 48, which meshes with pinion 49 keyed on one end of shaft 46. The other end of shaft 47 extends beyond the sub-frame 9^a and is journaled in a bearing carried by the bracket arm 42. A sprocket gear 49^A is keyed to the shaft 47 and receives a drive chain 50 driven by a sprocket 51 keyed to a shaft 52. Shaft 52 is journaled on the side frame 1 and sub-frames 9 and 9^a. One end of the shaft protrudes on the outside of said frame 1 and has a gear 53 keyed thereto which meshes with an idler gear 54 carried by side frame 1, which in turn meshes with a driving gear 55 keyed to shaft 13.

After the paper passes between the continuously operated rollers 44 and 45, it then passes between a second pair of intermittently operated rollers 60 and 61, carried on shafts 62 and 63 respectively, which are journaled in the sub-frames 9 and 9^a. The upper shaft 62 is mounted in boxings which are vertically slidable in slots formed in the sub-frames 9 and 9^a and is normally urged downwardly so that the upper roller 60 is in contact with the lower roller 61 by compression springs 65 in the same manner as the rollers 44 and 45. Adjacent ends of the shafts 62 and 63 are provided with intermeshing gears 66 and 67 respectively for causing uniform rotation thereof. The opposite end of shaft 63 has keyed thereto a pinion gear 68 which meshes with a driving gear 69 keyed to the end of a shaft 70, which is journaled on the sub-frames 9 and 9^a. The opposite end of shaft 70 has a ratchet disk 71 keyed thereto which is driven by a pawl 72 mounted on one end of a rocker arm 73. The other end of rocker arm 73 has a link 74 connecting it to a crank 75 keyed to the end of the shaft 52.

The end of the paper binding tape 40, after it passes between the pair of rollers 60 and 61 passes between a pair of cutting knives 80 and 81, thence across a pair of spaced stationary shoulders 82 and 83, the forward faces of which are inclined to guide the forwardly projecting end of the binding tape up over the tops of the shoulders. The end of the binding tape strip 40 when fed into position on the shoulders 82 and 83 rests on a horizontal table surface 84 in position to have glue applied thereto.

The mechanism for applying the glue to the end of the tape strip comprises a glue tank or box 85 carried by a pair of rigid horizontal arms 86, the outer ends of which are slotted in inverted U-shape and rest upon a shaft 87. The shaft 87 is mounted on the upper end of a pair of rocker arms 88 keyed on a shaft 89 which is journaled in the sub-frames 9 and 9^a. One end of shaft 89 extends out from the outer side of the sub-frame 9^a and has keyed thereto a crank arm 90, the outer end of which is pivotally secured to a drive bar 91. The opposite end of drive bar 91 is bifurcated to form a yoke 92, which embraces the opposite sides of drive shaft 13. A cam disk 93 is keyed on shaft 13 and in the face thereof is provided with a cam guideway 94 which receives a roller 95 mounted on drive bar 91.

One side of the glue box 85 is provided with a depending arm 96 riveted or otherwise suitably secured thereto and the lower end of the arm 96 carries a roller 97 which rides on the outer peripheral surface of the cam disk 93. A portion of the periphery of cam disk 93 is cut away as shown at 98 so as to carry the glue box in a lowered position for a short period during the rotation of the cam and during the remainder of the rotation of the cam, the glue pot will be in a raised or elevated position.

The front lower edge of the glue pot 85 is cut away to receive a portion of a gluing roller 99 journaled on a shaft carried by arms 100. The amount of glue carried out of the glue pot by the roller 99 is controlled by a wiper 101 slidably mounted on the floor of

the glue pot and controlled by a thumb screw 102. The front edge of the wiper extends along the entire length of the roller 99 and in close proximity thereto. After proper adjustment has been secured of this positioning, it may be locked in adjusted position by lock nut 103.

After a length of paper has been fed into position, and glue applied to the end thereof, this length of paper is severed by the knives 80 and 81. Knife 81 is stationary and knife 80 is carried by an arm 105 pivotally mounted on a pin 106. A spring 107 is mounted on pin 106 for normally holding the arm 105 and knife 80 in elevated position, that is, in spaced relationship to the stationary knife 81.

Means are provided for actuating the arm 105 and knife 80 so as to sever the length of wrapping tape from the remainder of the roll after the end thereof has been glued and comprises a roller 110 journaled on a short arm 111, which is integral with the arm 105. The roller 110 arrives on the outer peripheral surface of a cam disk 108 keyed to shaft 52 and is held in constant contact therewith by the spring 107. The outer peripheral surface of the disk 108 has a raised portion 109 which lifts the roller 110, to actuate the arm 105 and knife 80.

The packages to be wrapped are placed in a trough mounted on top of the frame work which has a bottom plate 112 and side plates 113 and 114. The fingers 15 carried by chain 14 are inverted L-shape in construction and are mounted on the chain at the end of the horizontal part. The depending part of the finger extends down inside of the side wall 114 as shown particularly in Fig. 12 so as to engage the packages to be wrapped and move them along the trough. As the packages are carried into the machine, that is to the left, as viewed in Fig. 3, they come to rest on a pair of pivotally mounted leaves 115 and 116. Springs 115^a and 116^a are provided for normally maintaining these leaves in a substantially horizontal position for receiving the packages and the leaf 115 is provided with a downwardly and rearwardly projecting wing 117 for guiding the forwardly projecting end of the binding tape on to the gluing platform 84.

After a suitable length of binding tape has been fed into position on the shoulders 82 and 83, the end thereof glued and the section severed from the remainder of the supply, the package to be wrapped is forced downwardly from its position on the leaves 115 and 116 by a depressor 118 as shown in Fig. 7 causing the package first to come in contact with the medial portion of the severed strip 119 of binding tape and thence downwardly between the stationary shoulders 82 and 83, causing the shoulders to fold the ends of the severed strip 119 up against the sides of the package to be wrapped. The depressor 118 forces the package on down between the shoulders until it rests on a stationary receiving platform 120.

The depressor 118, at its point of contact with the package to be wrapped, is of inverted U-shape and at one side thereof is provided with a downwardly extending flat web portion 121, which is vertically slidable in a pair of guideways 122 and 123 mounted on the sub-frame 9. A link 124 pivotally connects the lower end of the web portion 121 of the depressor to a crank arm 125, keyed to a shaft 126, journaled in the sub-frame 9 and side frame 2. An operating crank arm 127 is also keyed at one end thereof to shaft 126 and the other end of the arm carries a roller 128 which rides in a cam guideway 129 to a cam disk 130, which is keyed on shaft 13.

After the package to be wrapped comes to rest on the platform 120, means are provided for folding down the unglued end of the tape strip against the top side of the package and comprise a forwardly projecting finger 131 pivotally mounted on the forward end of a pusher member 132, which is slidably mounted in guideways on the platform 120, that is carried by the sub-frames 9 and 9^a. A spring 133 normally urges the outer end of finger 131 downwardly so as to yieldingly press the binding tape against the top of the package to be wrapped.

Horizontal movement of the pusher member 132 is controlled by a link 134 pivotally connecting the rear end of the pusher with the upper end of a rocker arm 135, which is keyed to a shaft 136 journaled in the side frames 1 and 2. An operating arm 137 is also keyed to shaft 136 and the outer end thereof is pivotally and slidably connected to one end of a drive bar 138. The opposite end of drive bar 138 is bifurcated to embrace the opposite sides of shaft 13 and the face of gear 12 is provided with a cam guideway 139, which receives a cam roller 140 mounted on the bar 138.

After the finger 131 folds the end of the wrapping tape down on to the top side of the package, further movement of the pusher 132 in the same direction shifts the package edgewise between a stationary shoulder 140^A and a platform 141. Such shifting of the package causes the shoulder 140^A to fold the glued end of the tape strip down against the top side of the package and into contact with the unglued end of the tape strip. The platform 141 is pivotally mounted at the center on a shaft 142 carried by the sub-frames 9 and 9^a. Each end of the platform 141 is pressed yieldingly upwardly toward the shoulder 140^A by a pair of compression springs 144 and 145 which bear between the under side of platform 141 and cross bars 146 and 147 respectively, which are supported by the sub-frames 9 and 9^a.

Successive packages being pushed between

these sealing members 140A and 141 cause the packages to be discharged out the opposite end of the passageway on to a conveyor belt 150, carried by a pulley wheel 151, which is carried on a shaft 152 iournaled in the sub-frames 9 and 9a. One end of the shaft 152 extends beyond the sub-frame 9 and has keyed thereto a sprocket wheel 154, which receives a sprocket chain 155 driven by a sprocket 156, keyed to shaft 13.

In the operation of this machine, packages are placed in the trough formed by the bottom piece 112 and side pieces 113 and 114 and are moved intermittently along this trough by the fingers 15 on the endless chain 14. This intermittent movement is secured through the cam 25 imparting a vertical motion to the drive bar 28, which carries a rack 32 engaging the pinion 33, thus reciprocating the arm 34, which carries the pawl 35 that engages the ratchet teeth 36 on the outer periphery of ratchet disk 37. The disk 37 is keyed to the shaft 31 upon which is keyed the drive sprocket wheel 38.

At the same time that the packages are being moved in position on the leaves 115 and 116, the wrapping tape is being continuously fed by the rollers 44 and 45 and hangs down in a loop between the rollers 44 and 45 and the rollers 60 and 61 until the amount contained in said loop equals the amount needed or required to wrap around a package. Rapid motion is then imparted to the rollers 60 and 61 by the ratchet drive of gear 69 on shaft 70, which is driven by the pawl 72 on arm 73 engaging the ratchet disk 71. Reciprocating motion is imparted to the arm 73 by the links 74 attached to bell crank 75, which is keyed to shaft 52. When a length of paper is fed into position on the shoulders 82 and 83 and the end thereof rests in position on the table 84, the glue pot 85 is raised by the cam 108 and carried over the end of the wrapping tape, lowered down into contact therewith and then shifted to the right, as viewed in Figs. 4 and 6 by the cam actuated drive bar 91 through the medium of arms 90, shaft 89 and arms 88. The timing of these cams is such that the gluing roller 99 will be raised from the table 84 until the binding strip is in position thereon and then lowered into contact with the end thereof and dragged over the end of the tape so as to leave a deposit of glue on the upper surface of the tape. Immediately upon the termination of the wiping action of the glue pot roller, the movable knife 80 is actuated by the cams 108 and 109 so as to sever the length of paper from the remainder of the supply.

Immediately upon the cutting off of the length of binding strip 119, the depressor 118 comes into action, forces the package downwardly between the yielding leaves 115 and 116, into contact with the medial portion of the binding tape 119, thence down between the stationary shoulders 82 and 83, thus folding the opposite ends of the binding strip up against the side edges of the packages. Depressor 118 continues its downward movement until the package rests on the platform 120.

Immediately upon the package reaching its lowermost position, the pusher 132 is shifted to the right, as viewed in Fig. 7, causing the yielding finger 131 to fold the unglued end of the tape down on to the top side of the package and firmly hold it in position thereon. At this point, the depressor 118 moves upwardly, and continued movement in the same direction of pusher 132 shifts the package to the right as viewed in Fig. 7 on to the receiving platform 141, thus causing the shoulder 140A to press the glued end of the binding tape down on to the top side of the package into contact with the unglued end of the tape.

The compression spring 144 firmly presses the package up against the shoulder 140A so as to secure a good seal of the ends of the tape. Successive wrapping and sealing of packages causes the sealed packages to be discharged from the table 141 on to the endless conveyor belt 150.

Although but one specific embodiment of this invention has been herein shown and described, it will be understood that numerous details of the construction shown may be altered or omitted without departing from the spirit of this invention as defined by the following claims:

We claim:

1. In a machine of the class described, a pair of stationary folding members spaced to receive a package therebetween and having upper surfaces for receiving a strip of tape, intermittently operated mechanism for feeding strips of tape across the upper surfaces of said folding members, means for applying glue to one end of said tape strips, a pair of hinged supports located above said folding members for receiving a package to be wrapped, yielding means for normally holding said supports in position to carry the package thereon, intermittently operated mechanism for supplying packages to said supports, a vertically movable depressor for shifting the packages downwardly into contact with the tape strips and thereafter moving the package and tape strip between said folding members for folding the tape against opposite sides of the package, a horizontally disposed stationary seat for receiving the package when depressed, a horizontally movable member for folding the unglued end of said tape strip against the top side of the package, a stationary folding and sealing member positioned adjacent the top edge of the package when resting on said stationary seat, and a horizontally movable pusher for shifting the package horizontally into engagement with said folding and sealing mem-

ber for pressing the glued end of said tape strip against the unglued end thereof.

2. In a machine of the class described, a support for receiving a package to be wrapped, a pair of folding members spaced to receive the package therebetween, mechanism for feeding a strip of tape to said folding members adjacent the bottom surface of the package, means for applying glue to one end of said tape strip, means for lowering said package in a vertical plane for causing said package to rest on said tape strip and to fold said tape strip against the opposite horizontal sides of the package, horizontally moving means for folding the unglued end of said tape strip against the top side of the package and for shifting the package in a horizontal plane, and means for folding the glued end of said strip against the unglued end thereof when said package is so shifted.

3. In a machine of the class described, a support for receiving a package to be wrapped, a pair of folding members spaced to receive the package therebetween, mechanism for feeding a strip of tape to said folding members adjacent the bottom surface of the package, means for applying glue to one end of said tape strip, means for lowering said package in a vertical plane for causing said package to rest on said tape strip and to fold said tape strip against the opposite horizontal sides of the package, a horizontally moving member for shifting said package, a forwardly projecting finger on said member for engaging the unglued end of said tape strip and folding it against the top side of the package, a stationary shoulder positioned so as to fold the glued end of said strip against the unglued end thereof when said package is shifted by said member, and means for shifting said member.

4. In a machine of the class described, means for supporting a supply of binding tape, yielding means for supporting a package, means for feeding a length of said tape adjacent said support, means for gluing one end of said tape, means for severing said length of tape from its supply, means for depositing a package on said support, means for lowering the package so as to contact with said tape and fold the ends of said tape upwardly against the horizontal sides of the package, a horizontally movable pusher member located so as to engage the package when said support is in its lower position, a forwardly projecting finger on the upper forward edge of said pusher member, means for moving said pusher to cause said finger to fold the unglued end of said strip against the top surface of the package and then move the package horizontally, a stationary shoulder located so as to engage and fold the glued end of said strip against the unglued end thereof when the package is shifted by said pusher member.

5. In a machine of the class described, a support for receiving a package to be wrapped, a pair of folding members spaced to receive the package therebetween, mechanism for feeding a strip of tape to said folding members underneath the bottom side of the package, means for applying glue to one end of said tape, means for shifting the package, a pair of stationary shoulders spaced to receive the package therebetween when shifted for folding the ends of said tape strip against the sides of said package, means for folding the unglued end of said tape against the top of said package, means for shifting the package in another direction, and a stationary shoulder for folding the glued end of said tape against the unglued end thereof when the package is so shifted.

6. In a machine of the class described, a support for receiving a package to be wrapped, a pair of folding members spaced to receive the package therebetween, mechanism for feeding a strip of tape to said folding members, means for applying glue to one end of said tape strip, a depressor for shifting the package from said support into contact with said tape strip and thereafter moving the package and tape strip between said folding members for folding the tape against opposite sides of the package, means for folding the unglued end of said tape strip against the remaining side of the package, a stationary shoulder adjacent the top surface of the package when in its shifted position, a yieldingly mounted support for receiving the package and pressing it against said shoulder when the package is shifted in said other direction for folding the glued end of said tape against the unglued end.

Signed at Chicago this 18th day of March, 1927.

HAZEN KIRKE BECKER.
EMIL G. JURGENS.