May 13, 1930. G. R. PITTAM ET AL 1,758,332

COLONIC AND VAGINAL IRRIGATING APPARATUS

Filed Oct. 29, 1928 3 Sheets-Sheet 1

Fig. 4.

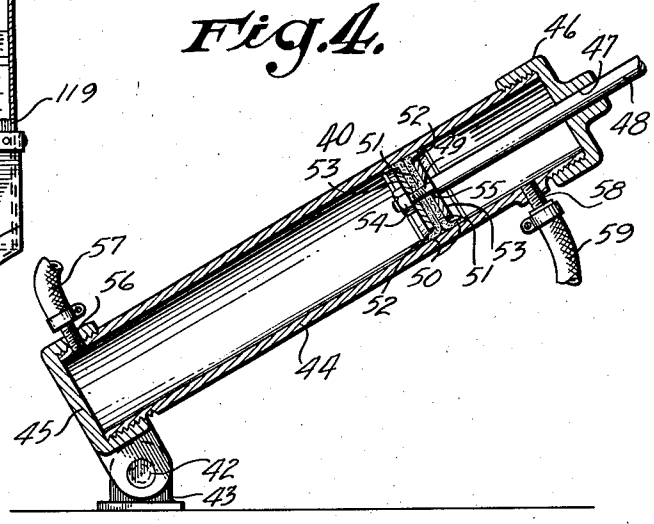

Fig. 1.

INVENTORS,
GEORGE R. PITTAM,
PURL F. BRANDT,
THOMAS B. BLEVINS.
BY
Fred W. Davis
ATTORNEY

May 13, 1930. G. R. PITTAM ET AL 1,758,332

COLONIC AND VAGINAL IRRIGATING APPARATUS

Filed Oct. 29, 1928 3 Sheets-Sheet 2

Fig. 2.

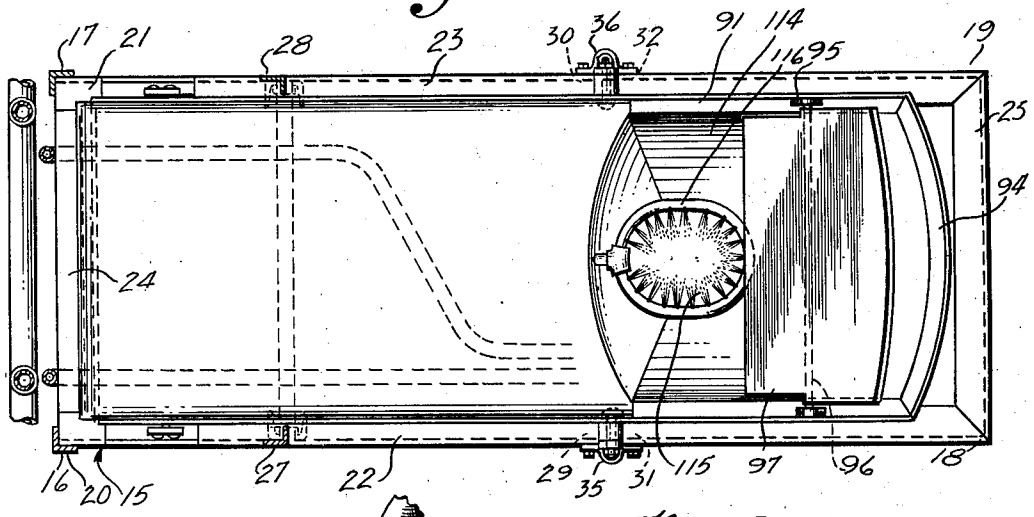

Fig. 9.

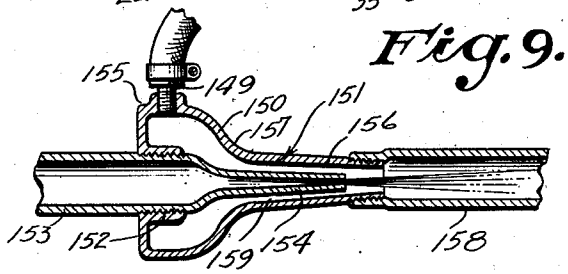

Fig. 3.

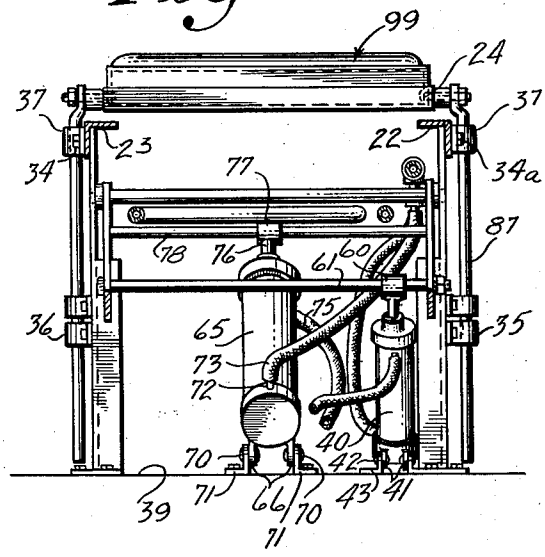

INVENTOR.
GEORGE R. PITTAM
PURL F. BRANDT
THOMAS B. BLEVINS

Earl A. Harris

ATTORNEY

May 13, 1930. G. R. PITTAM ET AL 1,758,332

COLONIC AND VAGINAL IRRIGATING APPARATUS

Filed Oct. 29, 1928 3 Sheets-Sheet 3

Fig. 8.

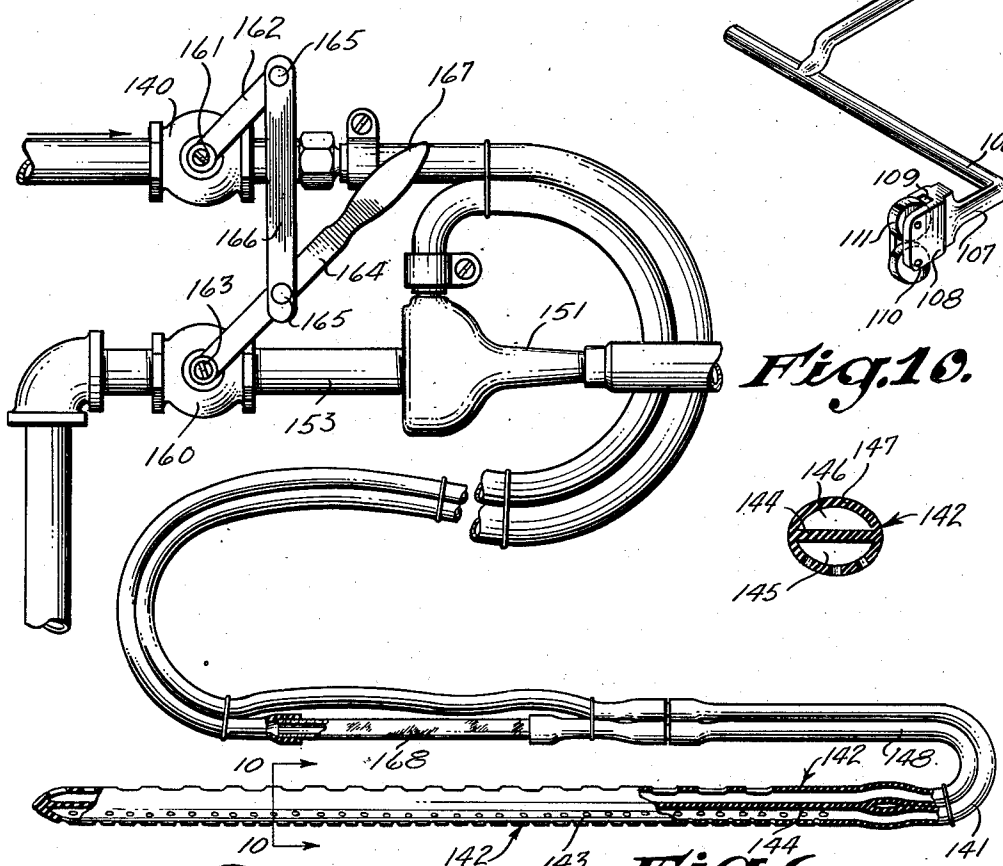

Fig. 7.

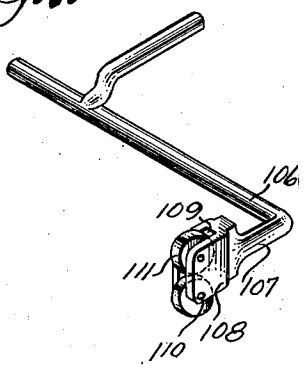

Fig. 10.

Fig. 6.

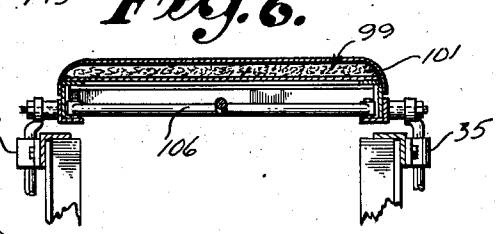

Fig. 5.

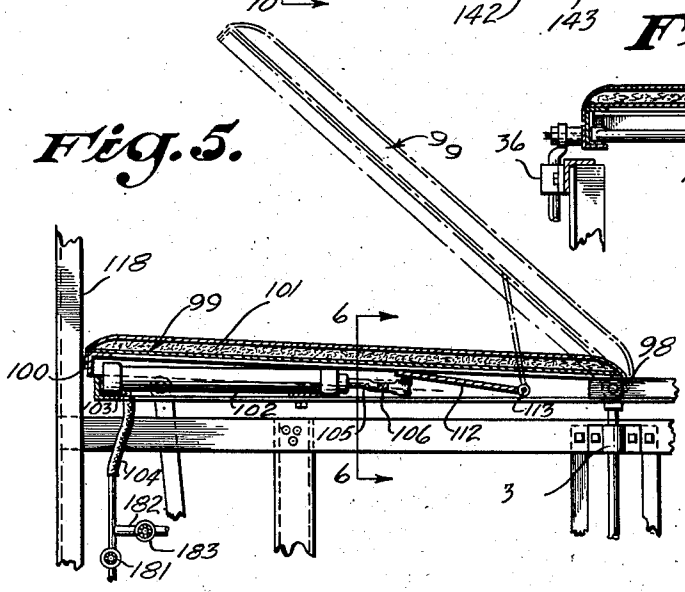

INVENTORS,
GEORGE R. PITTAM,
PURL F. BRANDT
THOMAS B. BLEVINS
BY

ATTORNEY

Patented May 13, 1930

1,758,332

UNITED STATES PATENT OFFICE

GEORGE R. PITTAM, THOMAS B. BLEVINS, AND PURL F. BRANDT, OF LONG BEACH, CALIFORNIA, ASSIGNORS OF ONE-FOURTH TO JIM C. PHILLIPS, OF LONG BEACH, CALIFORNIA

COLONIC AND VAGINAL IRRIGATING APPARATUS

Application filed October 29, 1928. Serial No. 315,632.

Our invention relates to the medical art and more particularly to a colonic and vaginal irrigating apparatus. In the use of such an apparatus it is frequently desirable that the head and shoulders of the patient be higher than his hips.

It is an object of our invention to provide an apparatus of the class described, which includes means for elevating the head and shoulders of the patient quickly and easily to any desired height above the hips.

It is likewise desirable in the use of an apparatus of the class described to elevate the hips of the patient above his head and shoulders. It is another object of our invention to provide an apparatus of the class described, which includes means for elevating the hips of the patient quickly and easily to any desired height above his head and shoulders.

It is also frequently desirable in employing such an apparatus that the torso shall be so raised that the body bends at the hips and assumes a sitting or semi-reclining posture. It is a further object of our invention to provide an apparatus of the class described, which includes means for so elevating the torso of the patient that the body bends at the hips to assume a sitting or semi-reclining posture.

It is a further object of our invention to provide an apparatus of the class described, which includes means for quickly and efficiently carrying off in a sanitary manner the discharged fluids.

It is necessary in a colonic or a vaginal irrigating apparatus to provide to the irrigating system fluids at various predetermined temperatures and pressures. It is an object of our invention to provide an apparatus of the class described, which includes means for supplying to the irrigating system fluids at various predetermined temperatures and at various predetermined pressures.

It has been the practice before our invention to supply fluid to the colon or vagina and depend upon gravity or reflex muscular action for the evacuation of this fluid. This practice is a slow, tedious and unsanitary one. It is an object of our invention to provide a colonic and vaginal irrigating apparatus which is adapted to supply fluid to the colon and vagina and to draw it off simultaneously.

We accomplish this object by providing an insertion member, which includes a portion adapted for supplying fluid and a discharge portion communicating with a partial vacuum. It is necessary that the rate of flow of the fluid in the supply tube should be varied at intervals. This necessitates a variation in the extent of the partial vacuum with which the discharge tube communicates, in order that the siphoning effect may be retained in constant relationship with the rate of flow of the fluid in the supply tube.

It is an object of our invention to provide an apparatus of the class described, which includes means for varying the rate of flow of the fluid in the supply tube and the degree of the vacuum with which the discharge tube communicates while retaining in constant relationship the rate of flow of the fluids in the supply tube and the discharge tube.

In order to prevent the collapse of the colon it is necessary that fluid should be supplied to the colon before suction is exerted through the discharge tube.

It is an object of our invention to provide an apparatus of the class described which includes means for supplying fluid at a definite rate to the supply tube before any suction is exerted on the discharge tube and for varying the rate of flow of the fluid in the supply tube and the degree of the vacuum with which the discharge tube communicates while retaining in constant relationship the rate of flow of the fluids in the supply tube and the discharge tube.

It is desirable for obvious reasons in an apparatus of the class described to have facilities for the observation of the character of the liquid passing through the discharge tube.

It is a still further object of our invention to provide in a colonic and vaginal irrigating apparatus means for the continuous observation of the character of the fluid passing through the discharge tube.

Other objects and advantages will be made

apparent from the following description and the accompanying drawings, in which:

Fig. 1 is a side elevational view of the apparatus of our invention.

Fig. 2 is a view from above of the table of the apparatus of our invention with a portion of the frame removed.

Fig. 3 is a view taken as indicated by the line 3—3 of Fig. 1.

Fig. 4 is a sectional view of one of the cylinders comprising the elevating mechanism in the table of the apparatus of our invention.

Fig. 5 is a sectional view from the side of the tops of the table of the apparatus of our invention.

Fig. 6 is a sectional view indicated by the line 6—6 of Fig. 5.

Fig. 7 is an enlarged view of the member adapted to elevate the auxiliary top of our invention.

Fig. 8 is a plan view of the fluid conveying and control means of the apparatus of our invention.

Fig. 9 is an enlarged sectional view of that portion of the fluid conveying means which provides the partial vacuum for the discharge tube.

Fig. 10 is an enlarged transverse sectional view of the insertion member of the apparatus of our invention.

Referring to the drawings and particularly to Fig. 1 the numeral 15 represents the table included in the apparatus of our invention. The table 15 includes a pair of oppositely disposed legs 16 and 17 at its head and a pair of oppositely disposed legs 18 and 19 at its foot. As best shown in Fig. 2, these legs may be angle irons suitably secured as by bolts 20 to a horizontal frame 21, which includes lateral members 22 and 23, a transverse head member 24 and a transverse foot member 25. Also secured as by bolts 26 to the lateral members 22 and 23 of the horizontal frame 21 near the pair of legs 16 and 17 at the head of the table 15 is a pair of oppositely disposed legs 27 and 28. Near the pair of legs 18 and 19 at the foot of the table 15, as best shown in Fig. 1, are two pairs of oppositely disposed legs 29 and 30 and 31 and 32, each of which is connected to one of the lateral members 22 and 23 of the horizontal frame 21, as by bolts 33. Connecting the legs 29 and 31 and the legs 30 and 32 and attached thereto as by bolts 34 is a pair of journalling members 35 and 36 substantially midway between the horizontal frame 21 and the floor 39. Another pair of journalling members 37 and 38 are secured to the lateral members 22 and 23 respectively between the legs 29 and 31 and 30 and 32, as by bolts 34ª.

As best shown in Figs. 1 and 3, our apparatus provides a cylinder 40 having formed on opposite sides of its lower end flanges 41, each of which is supported on a pivot 42 mounted in an angle iron 43 suitably secured to the floor 39. As best shown in Fig. 4 the cylinder 40 includes a cylindrical side wall 44 and end members 45 and 46 threadedly secured thereto. The end member 46 at the head of the cylinder 40 is provided with a central cylindrical bore 47 adapted to journal a cylindrical piston rod 48. On the lower end of the piston rod 48 is provided a portion 49 of lesser diameter than the portion 48. Adapted to be received upon the portion 49 are two cups 50, each providing a circular flat portion 51 and an annular lip portion 52. The cups 50 may be formed of leather, rubber or any other suitable flexible material and are adapted to be positioned upon the portion 49 of the piston rod 48, so that the flat portions 51 of the cups 50 contact each other and the annular lip portion 52 of each of the cups 50 extends away from the other of the cups 50 and engages the inner surface of the cylindrical side wall 44. A pair of circular plates 53 is also supported upon the portion 49 of the piston rod 48, one on each side of the cups 50. As best shown in Fig. 4, the circular plates 53 are of a diameter slightly less than the inner diameter of the cups 50.

Adapted to be threadedly received upon the lower end of the portion 49 of the piston rod 48 is a nut 54, which retains the flat portions 51 of the cups 50 compressed between the circular plates 53 and the assembly of plates 53 and cups 50 compressed against a shoulder 55, which separates the piston rod 48 from the portion 49 thereof.

Communicating with the interior of the cylinder 40 and threadedly received in the lower end of the cylindrical side wall 44 and the end member 45 is a supply pipe 56 adapted to communicate with a source of fluid supply as by a hose 57. Communicating with the interior of the cylinder 40 near the upper end thereof and threadedly received in the cylindrical side wall 44 is a discharge pipe 58 communicating with the drain as by a hose 59.

The upper end of the piston rod 48 is provided with an eye 60 in which a cylindrical shaft 61 is non-rotatably secured. As best shown in Fig. 3, the shaft 61 is of a length slightly less than the width of the table 15 and is secured at each end to a crank 62 intermediate its ends. As best shown in Fig. 1, one end of each of the cranks 62 is pivotally secured to one of the legs 27 or 28. The other end of each of the cranks 62 is rotatably associated as by a pivot 63 to one end of a lever 64.

Our apparatus includes also a second cylinder 65, which provides two flanges 66 extending downwardly from its lower end, the flanges 66 being mounted on pivots 70 to angle irons 71 secured to the floor 39. The cylinder 65 is provided with a supply pipe

72 communicating with a source of supply through a hose 73 and a discharge pipe 74 communicating with a drain as through a hose 75, and the construction is substantially like the cylinder 40 already described. The cylinder 65 is provided with a piston rod 76, which has formed at its upper end an eye 77 in which a shaft 78 is adapted to be non-rotatably secured. As best shown in Fig. 3, the shaft 78 is of a length slightly less than the width of the table 15 and is attached at each of its ends to one end of an L-shaped crank 79, comprising two portions 80 and 81 substantially at right angles to each other. Each of the cranks 79 at the juncture of their portions 80 and 81 is mounted upon a pivot 82, secured to one of two cross-members 83, which are attached as by bolts 84 to the legs 29 and 31 and 30 and 32. The end of the portion 81 of the L-shaped crank 79 is secured as by a pivot 85 to one end of a lever 86, whose other end is rotatably attached to a vertical cylindrical rod 87 adapted to be journalled in the journalling members 35 and 37.

The top of each of the vertical cylindrical rods 87 is provided with an eye 88 which is secured as by a bolt 89 to one side of the frame 90 of a top 91. The top 91, as best shown in Fig. 5, may be formed of angle irons. The top of each of the levers 64 is likewise provided with an eye 92, which is adapted to journal a pivot 93 attached to the frame 90 of the top 91 near the head end thereof. As best shown in Fig. 2, the end 94 at the foot of the top 91 is arcuated. Secured to the sides of the frame 90 of the top 91 near the end 94 are journals 95 adapted to rotatably support a shaft 96. A foot rest 97 is non-rotatably secured near its middle to the shaft 96, so that it may be swung from a substantially vertical position through ninety degrees to a substantially horizontal position. As clearly shown in Fig. 2, that end of the foot rest 97 closer to the foot of the frame 90 is arcuated to conform to the arcuated end 94 of the top 91, so as to fit snugly with it when the foot rest 97 is in its horizontal position.

Rotatably secured to the top 91 near the middle thereof, as by pivots 98 is a supporting member or an auxiliary top 99. As clearly shown in Fig. 5, the auxiliary top 99 includes a frame 100, which may be formed of angle iron, and an upholstered cushion 101 secured to the upper surface thereof and covering the entire auxiliary top. Positioned within the frame 90 of the top 91 and the frame 100 of the auxiliary top 99 is a horizontally disposed cylinder 102.

The cylinder 102 is provided with a supply pipe 103 near the rear end thereof, this supply pipe communicating with a source of supply as through a hose 104. The internal construction of the cylinder 102 is substantially like that of the cylinder 40 previously described. A piston rod 105 of the cylinder 102 is attached to a bar 106, disposed transversely to the top 91 and the auxiliary top 99. The length of the bar 106 is slightly less than the interior distance between the sides of the frame 100 of the auxiliary top 99. The bar 106 is bent at each end to provide a portion 107 extending towards the foot of the frame 90. Formed on the portion 107 of the bar 106 are two vertical flanges 108, which extend equidistantly above and below the horizontal axis of the bar 106. As best shown in Fig. 7, there is provided between the flanges 108 an opening 109 in which there is supported as by horizontal shafts 110 mounted in the flanges 108 two rollers 111. As clearly shown in the illustration, the rollers 111 with their shafts 110 are so positioned relative to the flanges 108 that the periphery of the rollers 111 is somewhat above and below the top and the bottom of the flanges 108.

The bar 106 is made of such a length that the lower of the rollers 111 will engage the upper surface of the angle iron comprising the sides of the frame 90. The upper of the rollers 111 is adapted to engage the lower surface of a lever or plate 112, whose forward end is rotatably secured as by a shaft 113 to the sides of the frame 90.

As best shown in Fig. 2, that end of the auxiliary top nearer to the foot of the frame 90 is arcuated towards the head end of the frame 90. The horizontal frame 21 is provided with a basin 114 extending from a point substantially in line with the arcuated end of the auxiliary top 99 to the foot member 25 and from the opposite sides of the horizontal frame 21. The basin 114 slants from its sides and from each end towards a centrally disposed bowl 115. Set into the basin 114 around the bowl 115 is a pipe 116 adapted to discharge sprays of water converging the bowl 115.

The legs 16 and 17 at the head of the frame 15 may be extended upwardly to cooperate with other legs 117 and 118 attached to the horizontal frame 21 to support tanks 119. Each of the tanks 119 is provided with two supply pipes 120 and 121 for providing cold and hot water respectively, and with an overflow pipe 122 communicating with each of the tanks 119 near the top thereof, to lead any over-supply of water to the drain pipe 123. A pipe 124 communicates with the bottom of each of the tanks 119 to convey fluid therefrom downwardly under the head of the horizontal frame 21 and thence towards the foot thereof to a primary pipe 125. As clearly shown in Fig. 1, the pipe 124 may be provided with a connection 126 to the overflow pipe 122 communicating with the drain pipe 123 and may be provided with a valve 127 in the connection 126 and a valve 128 in the pipe

124, so that fluid from the tanks 119 may be prevented from flowing through the pipe 124 by the valve 128 and may pass through the connection 126 and be discharged into the drain pipe 123 There may likewise be provided in the pipe 124 a valve 129 near the primary pipe 125.

There may be provided any number of tanks 119, each with its separate communication with the primary pipe 125, the form of our invention herein shown and illustrated providing two such tanks, one communicating with the primary pipe 125 through the pipe 124 as already described and the other communicating with the primary pipe 125 through a pipe 130 having a valve 131 therein adjacent to the primary pipe 125.

Secured as by straps 132 to the legs 18 and 19 at the foot of the horizontal frame 21 is another tank 133 having pipes 134 and 135 for supplying hot and cold water respectively. Communicating with the tank 133 near the bottom thereof is a pipe 136, whose other end connects to the primary pipe 125. The pipe 136 is provided with a valve 137 near the primary pipe 125.

The primary pipe 125 is closed at one end and communicates at its other with a lead pipe 138, which in turn communicates with one end of a supply pipe 139. The lead pipe 138 is provided with a valve 140, a detailed description of which will be given later. The other end of the supply pipe 139 communicates with a fluid supply portion 141 of an insertion member 142. As best shown in Fig. 8, the fluid supply portion 141 of the insertion member 142 is provided with a plurality of openings 143, so that the fluid supplied to the insertion member 142 is discharged therefrom at frequent intervals throughout its length.

As clearly shown in Fig. 10, the insertion member 142 is substantially elliptical in cross-section and is provided with a central wall 144 separating it into two passageways 145 and 146 respectively. The passageway 145 constitutes the fluid supply portion 141 and receives the fluid supplied by the supply pipe 139 and disperses it through the openings 143 as already described. The passageway 146 constitutes a discharge passage and is provided throughout its length with a plurality of openings 147 somewhat larger in size than the openings 143 in the supply passage 145. The discharge passageway 146 communicates with a discharge pipe 148, which in turn is attached to a nipple 149 threadedly received in a body 150 of an injector 151.

As best shown in Fig. 9, the body 150 of the injector 151 is provided with a central annular internally threaded sleeve 152 adapted to receive a pipe 153 communicating with the water main. The pipe 153 is provided at its inner end with a nozzle 154. The body 150 of the injector 151 comprises a portion 155 of a diameter substantially larger than that of the pipe 153 connecting with the water main and a portion 156 of a diameter slightly less than that of the pipe 153 communicating with the main and a tapered portion 157 connecting the portion 155 and the portion 156 of the body 150. The end of the portion 156 of the body 150 is provided with external threads adapted to receive the threaded end of a pipe 158 leading to the drain.

As clearly shown in Fig. 9, the construction of the body 150 of the injector 151 is such that an annular passageway 159 is formed between the portion 156 of the body 150 and the nozzle 154 of the pipe 153 connecting with the water main.

The pipe 153 is provided with a valve 160 positioned in close proximity to the valve 140 in the lead pipe 138. The valves 140 and 160 and the other valves included in our apparatus may be of the form well known in the art and so constructed that the rotation of an inner valve member controls the degree of opening of the valve and consequent rate of flow of the fluid through it. Non-rotatably attached to such an inner valve member in the valve 140 as by a screw 161 is an arm 162. Likewise non-rotatably attached to such an inner valve member of the valve 160 as by a screw 163 is an operating lever 164. Attached to the free end of the arm 162 and to the operating lever 164 intermediate its ends as by pivots 165 is a lever 166. The length of the arm 162 between the screw 161 and the pivot 165, the length of that portion of the operating lever 164 between the screw 163 and the pivot 165, the length of the lever 166 between the pivots 165 and the distance between the valves 140 and 160 are so interrelated that when a handle 167 formed on the free end of the operating lever 164 is lowered or raised, the degree to which the valve 140 is opened is proportional to the degree to which the valve 160 is opened.

As best shown in Fig. 8 the discharge pipe 148 is provided with a transparent portion 168 made of glass or other suitable transparent material, so that the character of the discharge fluid passing through the discharge pipe 148 can be observed through the transparent portion 168.

The operation of our invention is as follows:

The patient is permitted to recline upon the auxiliary top 99 and the foot rest 97 is so swung upon the shaft 96 as to assume the position most comfortable to the patient for the support of his feet thereon.

If it is then desired to raise the hips of the patient above his head and shoulders a valve 169 is opened, admitting water under pressure from a pipe 170 communicating with the water main, not shown, to pass

through the hose 73 and the supply pipe 72 into the lower portion of the piston 65. As this water is forced under pressure into the lower portion of the cylinder 65, the piston and its associated piston rod 76 are forced upwardly towards the head end of the cylinder 65. As the piston rod 76 is moved out of the cylinder 65, its associated shaft 78 is caused to rotate about the pivot 82 to which it is attached by the portion 80 of the L-shaped crank 79, until the portion 80 of the crank 79 assumes the position indicated by the dotted lines of Fig. 1.

As the portion 80 of the L-shaped crank 79 assumes this position, the cylinder 65 and the piston rod 76 likewise assume the position indicated by the dotted lines of Fig. 1, swinging upon the pivots 70 with which the flanges 69 at the bottom of the cylinder 65 are associated. The portion 81 of the L-shaped crank 79, being integral with the portion 80 thereof, moves from the position indicated by the full lines in Fig. 1 to the position indicated by the dotted lines in the same figure, when the portion 80 thereof moves to the position shown in dotted lines.

As the L-shaped crank 79 moves to the position thus indicated, the lever 86 likewise assumes the position indicated by the dotted lines of this figure and the vertical cylindrical rod 86 to which the upper end of this lever 86 is rotatably secured is forced upwardly, its motion being made vertical by the guiding effect of the journalling members 35 and 37. Inasmuch as there is an L-shaped crank 79 and associated lever 86 attached to each end of the shaft 78 and to a vertical cylindrical rod 87 on each side of the table 15, the movement of the piston rod as just described causes the vertical rods 87 on each side of the table 15 to move vertically upwards. As the upper end of the vertical cylindrical rods 87 are rotatably attached to the top 91 in a manner as already described, this upward movement of the vertical cylindrical rods 87 moves the top 91 and the auxiliary top 99 into a position substantially as indicated by the dotted lines 171 of Fig. 1, in which the foot of the top 91 is considerably elevated over the head end of the top 91.

It is quite obvious that the degree of elevation of the foot of the top 91 over the head end of the top 91 is easily controlled by the extent to which the valve 169 is opened and the consequent amount of water under pressure admitted from the main to the cylinder 65.

When the foot of the top 91 is elevated above the head end of the top 91 to the extent desired, the valve 169 is closed. The top 91 retains this position until a valve 172 in a discharge pipe 173 is opened. As clearly shown in Fig. 1, the discharge pipe 173 connects the hose 73 between the supply pipe 72 and the valve 169 with the drain, so that if the valve 169 is closed when the top 91 is in the position indicated by the dotted lines 171 of Fig. 1, and the valve 172 is opened, the combined weight of the top 91 and the auxiliary top 99 and the patient supported thereon exerts on the piston in the cylinder 65 sufficient pressure to force the water in the cylinder 65 below the piston through the supply pipe 72, the hose 73, and the exhaust pipe 173 to the drain, thus permitting the top 91 and the auxiliary top 99 to resume the position indicated by the full lines in Fig. 1.

When it is desired to raise the head and shoulders of the patient above his hips and feet, a valve 174 is opened. As clearly shown in Fig. 1, the valve 174 is positioned in the hose 57 between the supply pipe 56 and the pipe 170 connecting to the water main. The hose 59 is likewise provided with a communicating pipe 175 connecting the hose 59 between the supply pipe 56 and the valve 174 with the drain. The communicating pipe 175 has a valve 176 associated therewith between the hose 59 and the drain, so that when the valve 176 is closed and the valve 174 is opened the interior of the cylinder 40 is placed in communication with the water main. The hose 59 attached to the discharge pipe 58 at the head end of the cylinder 40 and communicating with the drain 123 is provided with a valve 177 between the discharge pipe 58 and the drain 123. When the valve 177 is opened any water in the cylinder above the piston is allowed to pass through the hose 59 to the drain 153 and if the valve 176 is closed and the valve 174 is open, water under pressure from the main is admitted to the lower end of the cylinder 40 and the piston is forced upwardly therein.

As the piston moves upwardly in the cylinder 40 the head end of the piston rod 48 is forced outwardly from the head end of the cylinder 40 and causes the shaft 61 and crank 62 to move in an arc about the fixed end of the crank 62. This movement of the shaft 61 and the crank 62 causes the lever 64 to move upwardly so that the lever 64, the crank 62 and the piston rod 48 assume the position shown in dotted lines in Fig. 1. As the upper end of the piston rod 48 moves in an arc about the fixed end of the crank 62 the piston 40 is caused to swing upon the pivots 42 with which the flanges 41 at the lower end of the piston 40 are associated from the position shown in full lines of Fig. 1 to the position indicated by the dotted lines of the same figure.

Inasmuch as a crank 62 is provided at each end of the shaft 61 and each crank 62 is associated with the lever 64, the movement of the cylinder in the piston 40 as just described causes the lever 64 on each side of the table 15 to move upwardly. The upper end of each of the levers 64 being rotatably associated with the top 91, as previously described, this

upward movement of the levers 64 causes the top 91 and the auxiliary top 99 to move from the position shown in the full lines of Fig. 1 to the position indicated by the dotted lines 180 of the same figure. It is obvious that the amount of the rise of the head end of the table 91 is easily controlled by the function of the valve 174 in determining the amount of water under pressure admitted from the water main to the lower end of the cylinder 40.

Another control means is provided in the valve 177 in the hose 59. If, while the valve 174 is opened and water under pressure is being admitted to the lower end of the cylinder 40, the valve 177 is closed, the water in the cylinder 40 above the piston is prevented from escaping and the upward movement of the piston in the cylinder 40 is terminated. If the valve 177 is closed and the valve 174 is opened until the piston in the cylinder 40 is at rest and then the valve 174 is closed, it is evident that there is water under pressure both above and below the piston in the cylinder 40 and that both the upward and downward movements of the head end of the top 91 are prevented.

When it is desired to lower the head end of the top 91, the valve 174 is closed and the valve 176 is opened. The weight of the patient supported on the table combined with the weight supported by the piston rod 48 moves the piston downwardly in the cylinder 40, forcing the water below the piston through the supply pipe 56, the hose 57, and the connecting pipe 175 to the drain.

It should be apparent that we have provided a means for raising the head end of the top 91 above the foot of the top 91 to any degree desired, for locking the top 91 in this tilted position, so that it resists both upward and downward movement and for lowering the top 91 to its original position.

When it is desired to move the patient on the table 15 from a reclining to a sitting or semi-reclining posture water is admitted under pressure from the main through the hose 104 to the lower end of the cylinder 102 positioned between the top 91 and the auxiliary top 99. As clearly shown in Fig. 5, the hose 104 is provided with a valve 181 for controlling the rate of flow of water from the main through the hose 104 and is also provided with a pipe 182 connecting the hose 104 between the valve 181 and the supply pipe 103 with the drain. A valve 183 is associated with the pipe 182 between the hose 104 and the drain so that when the valve 183 is closed and the valve 181 is opened, water under pressure from the main is admitted through the hose 104 and the supply pipe 103 to the lower end of the cylinder 102. This water under pressure moves the piston towards the head end of the cylinder 102 and the piston rod 105 towards the foot of the table 15. As the piston rod 105 and its associated bar 106 is moved towards the foot of the table 15, the upper one of the rollers 111 engages the lower surface of the plate 112.

Inasmuch as there is provided a pair of these rollers 111 at each end of the bar 106, as best shown in Fig. 7, and inasmuch as the lower of these rollers 111 is adapted to roll upon the horizontal surface of the angle irons comprising the lateral members 22 and 23 of the horizontal frame 21, the continued movement of the piston rod 105 and its associated bar 106 towards the foot of the table 15 causes the rollers 111 to move in the same direction, so that the upper of the rollers 111 rolling on the under surface of the plate 112 forces it to swing upon its shaft 113 from the position in which it is shown in the full lines in Fig. 5 to the position indicated by the dotted lines of the same figure.

As the plate 112 moves upwardly its free end engages the lower surface of the members constituting the sides of the frame 100 of the auxiliary top 99, so that the auxiliary top 99 is swung upon the pivot 98 from the position in which it is shown in full lines in Fig. 1 to the position indicated by the dotted lines of the same figure. It is obvious that the extent to which the auxiliary top is raised is easily controlled by the function of the valve 181 in determining the amount of water under pressure admitted from the main to the lower end of the cylinder 40.

When it is desired to lower the auxiliary top 99 to its original position to enable the patient to resume a reclining posture, the valve 181 is closed and the valve 183 is opened, so that the pressure on the piston in the cylinder 102 exerted by the combined weights of the patient, the auxiliary top 99 and the associated mechanism, causes the piston to move away from the head end of the cylinder 40 and to force the water below it through the supply pipe 103, the hose 104 and the pipe 182 to the drain. It should be apparent that we have provided a means for moving the auxiliary top 99 so that the patient is made to assume a sitting posture from a reclining position or any posture between these two extremes.

When the patient is properly positioned upon the table 15 and the tanks 119 are filled with water at the desired temperature, the handle 167 of the operating lever 164 is moved downwardly so that the valve 140 is opened. The valve 137 to the tank 133 and the valve 131 to one of the tanks 119 being closed, and the valve 129 to the other of the tanks 119 being opened, fluid is admitted to the primary pipe 125 only from that one of the tanks 119 controlled by the valve 129, so that when the valve 140 is opened, fluid from the tank 119 is admitted to the supply pipe 139. It should be apparent that the amount and the pressure of the fluid admit-

ted to the supply pipe 139 is easily controlled by the valve 140, which is operated by the operating lever 164.

As the handle 167 of the operating lever 164 is lowered, the valve 160 is opened so that water under pressure from the main is admitted through the pipe 153 and discharged through the nozzle 154 into the portion 156 of the body 150 of the injector 151 and passes therefrom through the pipe 158. As the water under pressure is discharged from the nozzle 154, a suction is created in the annular passageway 159 around the nozzle 154 in a manner well known in the art. This suction is exerted throughout the discharge pipe 148, so that there is a tendency to draw through the discharge pipe 148 any material therein and to discharge it inside the body 150 of the injector 151. As has been previously pointed out, the actuating mechanism for the valves 140 and 160 is so designed that the suction effect of the injector 151 is made just sufficient to draw off fluid supplied through the supply pipe 139 and this suction effect increases and decreases in exact proportion with the increase or decrease in the amount of fluid admitted through the supply pipe 139. Moreover, this actuating mechansim is so designed that fluid is supplied to the insertion member 142 at a definite rate of flow before suction is applied to the discharge passage 146, thus preventing any possibility of this suction causing a collapse of the colon.

When the desired rate of flow of the fluid in the supply pipe 139 has been established, the insertion member 142 is inserted in the colon of the patient. The fluid supplied through the supply pipe 139 passes out of the insertion member 142 throughout its length through the openings 143 therein and together with the material washed from the colon of the patient is drawn into the discharge passage 146 through the openings 147 therein by virtue of the suction exerted thereon through the discharge pipe 148 by the injector 151. As the discharge fluids are drawn through the discharge pipe 148 they pass through the transparent portion 168 thereof, so that the character of this discharge may be continually observed, in order to determine the necessity of a lesser or greater flow of the fluid in the supply pipe 139 or the desirability of continuing the washing process. The discharge fluid, after passing through the transparent portion 168 of the discharge pipe 179 is discharged into the body 150 of the injector 151 and is drawn through the annular passage 150 around the nozzle 154 and passes through the pipe 158 to the drain.

Any discharge of the supply fluid or the discharge fluid passing out through the openings 143 and 146 in that portion of the insertion member 142, which is not inserted in the patient, falls on to the basin 114 and by virtue of the slant of the sides and ends flows towards the bowl 115. The continuous spray from the pipe 116 serves to hasten the flow of the discharge fluids in the basin 114 into the bowl 115 and thereby maintains the utmost cleanliness in the irrigating process.

The tanks 119 are provided with gauges and thermometers arranged to be visible to an operator standing at the foot of the table 15. When a supply in that one of the tanks 119 which is being employed in the irrigating process is depleted, as indicated by the water gauge thereon, the valve 130 is opened and the valve 129 is closed, so that fluid from the other of the tanks 119 is admitted to the primary pipe 125 and thereafter utilized in the irrigating process in the manner described. The valve 129 being closed, permits the filling of that one of the tanks 119 which has been emptied by means of the pipes 120 and 121 adapted to supply cold and hot water respectively to the empty tank 119.

When it is desired to employ a greater amount of pressure on the fluid used in the supply tube 139 the valves 129 and 130 are closed and the valve 137 is opened. The opening of the valve 137 permits the entrance of fluid from the tank 133 to the primary pipe 125 and thence to the supply pipe 139. The tank 133 is supplied with hot and cold water through the pipes 134 and 135 respectively, so that the fluid contained in the tank 133 is at all times under a pressure equal to the pressure in the water mains. It should be obvious that the rate of flow of the fluid to the supply pipe 139 is controlled by the valve 149 by its operating lever 164 regardless of whether the fluid so supplied comes from either of the tanks 119 or the tank 133.

Although we have described that particular form of an insertion member adapted for use in colonic irrigation, the apparatus of our invention is adapted to function equally well as a vaginal irrigating apparatus by the substitution for the insertion member 142 of a suitable vaginal insertion member of the type well known in the art. Although we have described our apparatus as supplying to the colon or the vagina water of a temperature and pressure desired, it should be obvious that any chemical solution of desirable medicinal properties could be substituted for the water thus supplied to the supply pipe 139.

It is apparent that we have provided a colonic and vaginal irrigating apparatus which includes means for so raising and lowering the top of a table as to elevate the head and shoulders of a patient above his hips and feet, this means being adapted to so retain the top of the table at any slope desired as to resist pressure tending to increase or decrease that slope.

It is also obvious that we have provided an apparatus of the class described, which

includes means for raising and lowering the top of the table so that the hips of the patient are elevated to any extent desired above his head and shoulders.

We have also provided an apparatus of the class described, which includes means for so raising the torso of a patient that his body is bent at the hips and the patient assumes any position desired from a reclining to a sitting posture.

It is apparent also that we have provided in an apparatus of the class described a discharge basin adapted to quickly and clearly carry off the discharge fluid. Moreover we have provided in an apparatus of the class described a supply means whereby fluids of predetermined temperature and at any desired pressure are provided for the irrigating process.

In providing the apparatus just described, we have also provided a colonic and vaginal irrigating apparatus which supplies fluids to the colon or the vagina and simultaneously evacuates the discharge fluids from the colon or the vagina.

In the apparatus herein described we have also provided a control means adapted to supply fluid to the insertion member at a definite rate of flow before any suction is exerted through the insertion member and, when this definite rate of flow of the supply fluid is exceeded, to maintain the rate of flow of the supply fluid in the insertion member in constant proportion to the degree of suction in the discharge passage of the insertion member.

Moreover, by providing a transparent section in the discharge pipe, we have provided in an apparatus of the class described means for the continual observation of the discharge fluid.

Although the apparatus herein illustrated and described is fully capable of performing all of the purposes primarily stated, we do not wish to be so restricted, for our invention is capable of being embodied in various other forms, all coming within the scope of the claims which follow.

We claim as our invention:

1. In a colonic and vaginal irrigating apparatus, the combination of: supporting means adapted to support a human body in a reclining position, or with the head elevated above the hips and feet, or with the hips and feet elevated above the head, or with the body horizontal or in a sitting position and to move the said body to any of these positions or to any position between these positions; and means, including an insertion member, associated with said supporting means for providing fluid to the orifices of said body and simultaneously drawing off the discharge fluid.

2. In a colonic and vaginal irrigation apparatus, the combination of: a table providing a basin, said table being adapted to so support the torso of an individual that his buttocks and legs are positioned above said basin; means associated with said table for raising the foot of the top of said table above its head and lowering it; means associated with said table for elevating the head end of the top of said table above its foot and lowering it; and means for so swinging a portion of the top of said table as to move a human body supported on said table into a sitting position or reclining position.

3. In a colonic and vaginal irrigation apparatus, the combination of: a table providing a top; fluid operated means associated with said table for elevating the foot of said top above its head; fluid operated means associated with said table for elevating the head of said top above its foot; an auxiliary top associated with said top; and fluid operated means associated with said top and said auxiliary top, said means being adapted to elevate one end of said auxiliary top above the other of its ends independently of the position of said top.

4. In a colonic and vaginal irrigating apparatus, the combination of: a table providing a top, said table being adapted to support a human body; a basin so associated with said table as to be positioned directly beneath the buttocks of the said body supported on said table; means associated with said table and said top for elevating and lowering the head end of said top; means associated with said table and said top for elevating and lowering the foot of said top; an auxiliary top associated with said top; and means associated with said top and said auxiliary top for elevating and lowering the head end of said auxiliary top.

5. In a colonic and vaginal irrigating apparatus, the combination of: a table providing a top, said table being adapted to support a human body; a basin so associated with said table as to be positioned directly beneath the buttocks of the said body supported on said table; means associated with said table and said top for elevating and lowering the head end of said top; means associated with said table and said top for elevating and lowering the foot of said top; an auxiliary top associated with said top; means associated with said top and said auxiliary top for elevating and lowering the head end of said auxiliary top; fluid supply tanks associated with said table; a suction providing means; an insertion member adapted to be inserted in the colon or vagina; and connecting means adapted to connect said supply tanks and said suction means to said insertion member.

6. In a colonic and vaginal irrigating apparatus, the combination of: a table providing a top, said table being adapted to support a human body; a basin so associated with

said table as to be positioned directly beneath the buttocks of the said body supported on said table; means associated with said table and said top for elevating and lowering the head end of said top; means associated with said table and said top for elevating and lowering the foot of said top; an auxiliary top associated with said top; means associated with said top and said auxiliary top for elevating and lowering the head end of said auxiliary top; fluid supply tanks associated with said table; a suction providing means; an insertion member providing a supply passage and a discharge passage, each of said passages communicating with the exterior of said insertion member through a plurality of openings therein, said insertion member being adapted for insertion in the colon or vagina; and connecting means adapted for connecting said supply tanks to said supply passage in said insertion member, and said suction providing means to said discharge passage of said insertion member.

7. In a colonic and vaginal irrigating apparatus, the combination of: a table providing a top, said table being adapted to support a human body; a basin so associated with said table as to be positioned directly beneath the buttocks of the said body supported on said table; means associated with said table and said top for elevating and lowering the head end of said top; means associated with said table and said top for elevating and lowering the foot of said top; an auxiliary top associated with said top; means associated with said top and said auxiliary top for elevating and lowering the head end of said auxiliary top; fluid supply tanks associated with said table; a suction providing means; an insertion member providing a supply passage and a discharge passage, each of said passages communicating with the exterior of said insertion member through a plurality of openings therein, said insertion member being adapted for insertion in the colon or vagina; connecting means adapted to convey the supply fluid from said supply tanks to said supply passage of said insertion member, and to connect said suction providing means with said discharge passage of said insertion member; and control means associated with said connecting means, said control means being adapted to vary proportionately the rate of flow of the supply fluid to said insertion member and the degree of suction in said discharge passage of said insertion member.

8. In a colonic and vaginal irrigating apparatus, the combination of: a table providing a top, said table being adapted to support a human body; a basin so associated with said table as to be positioned directly beneath the buttocks of the said body supported on said table; means associated with said table and said top for elevating and lowering the head end of said top; means associated with said table and said top for elevating and lowering the foot of said top; an auxiliary top associated with said top; means associated with said top and said auxiliary top for elevating and lowering the head end of said auxiliary top; fluid supply tanks associated with said table; a suction providing means; an insertion member providing a supply passage and a discharge passage, each of said passages communicating with the exterior of said insertion member through a plurality of openings therein, said insertion member being adapted for insertion in the colon or vagina; conveying means adapted to convey the supply fluid from said supply tanks to the said supply passage of said insertion member; connecting means adapted to connect said suction providing means to said discharge passage of said insertion member and to convey the discharge fluid from said insertion member, said connecting means having a transparent portion; and control means associated with said conveying means and said connecting means, said control means being adapted to vary the rate of flow of the supply fluid in said conveying means and the degree of suction in said connecting means while maintaining a constant ratio between them.

9. In a colonic and vaginal irrigating apparatus, the combination of: a table providing a top; an auxiliary top, rotatably supported at one end by said top; a lever disposed between said top and said auxiliary top, said lever being rotatably supported by said top; a cylinder positioned between said top and said auxiliary top; a piston slidably disposed in said cylinder; a piston rod associated with said piston and extending out of said cylinder; and pairs of rollers so associated with said piston rod that the movement of the piston rod out of the cylinder so moves the said pairs of rollers that the lower roller of each of said pairs engages said top and the upper roller of each of said pairs so engages said lever that its free end is swung upward engaging said auxiliary top to swing upward the free end thereof.

10. In a colonic and vaginal irrigating apparatus, the combination of: a table having a top thereon; fluid operated means associated with said table for raising and lowering the head end of said top and retaining it in any position between its raised and lowered positions; fluid operated means associated with said table for raising the foot of said top to any desired elevation; an auxiliary top, one end of which is associated with said top; a fluid operated piston; a piston rod attached to said piston; a lever, one end of which is associated with said top; rollers so associated with said piston rod that the forward motion of said piston moves the said rollers so that they engage said top and said lever,

swinging the free end of said lever upwardly to engage said auxiliary top and move its free end upwardly; fluid supply means supported by said table; an insertion member providing a supply passage and a discharge passage, each of which communicates with the exterior of said insertion member through openings therein; connecting means connecting said fluid supply means to said supply passage of said insertion member; a suction providing means having a body with a cylindrical and a frusto-conical portion and a concentric nozzle adapted to discharge fluid in said frusto-conical portion of said body; supplying means for supplying fluid under pressure to said nozzle; connecting means adapted to connect said cylindrical portion of said body of said suction providing means to the discharge passage of said insertion member; means for leading off from the said frusto-conical portion of said body the fluid discharged by said nozzle and the discharge fluid drawn through said connecting means from the discharge passage of said insertion member; and control means associated with said connecting means attached to said fluid supply means and said supplying means attached to said suction providing means, said control means being adapted to vary the rate of flow of fluid in said supply passage of said insertion member and the amount of suction in said discharge passage of said insertion member while maintaining constant their relative proportion.

11. In a colonic and vaginal irrigating apparatus, the combination of: a table having a top thereon; fluid operated means associated with said table for raising and lowering the head end of said top and retaining it in any position between its raised and lowered positions; fluid operated means associated with said table for raising the foot of said top to any desired elevation; an auxiliary top, one end of which is associated with said top; a fluid operated piston; a piston rod attached to said piston; a lever one end of which is associated with said top; rollers so associated with said piston rod that the forward mot on of said piston moves the said rollers so that they engage said top and said lever, swinging the free end of said lever upwardly to engage said auxiliary top and move its free end upwardly; fluid supply means supported by said table; an insertion member providing a supply passage and a discharge passage, each of which communicates with the exterior of said insertion member through openings therein; connecting means connecting said fluid supply means to said supply passage of said insertion member; a suction providing means having a body with a cylindrical and a frusto-conical portion and a concentric nozzle adapted to discharge fluid in said frusto-conical portion of said body; supplying means for supplying fluid under pressure to said nozzle; connecting means adapted to connect said cylindrical portion of said body of said suction providing means to the discharge passage of said insertion member; means for leading off from the said frusto-conical portion of said body the fluid discharged by said nozzle and the discharge fluid drawn through said connecting means from the discharge passage of said insertion member; and control means associated with said connecting means attached to said fluid supply means and said supplying means attached to said suction providing means, said control means being adapted, when the rate of flow of fluid in said supply passage of said insertion member exceeds a predetermined rate, to vary the rate of flow of fluid in said supply passage of said insertion member and the amount of suction in said discharge passage of said insertion member while maintaining constant their relative proportion.

In testimony whereof, we have hereunto set our hands at Long Beach, California, this 22nd day of October, 1928.

GEORGE R. PITTAM.
THOMAS B. BLEVINS.
PURL F. BRANDT.