Aug. 10, 1948. P. HAYMOND 2,446,763

REFRIGERANT EVAPORATOR

Filed Jan. 18, 1945

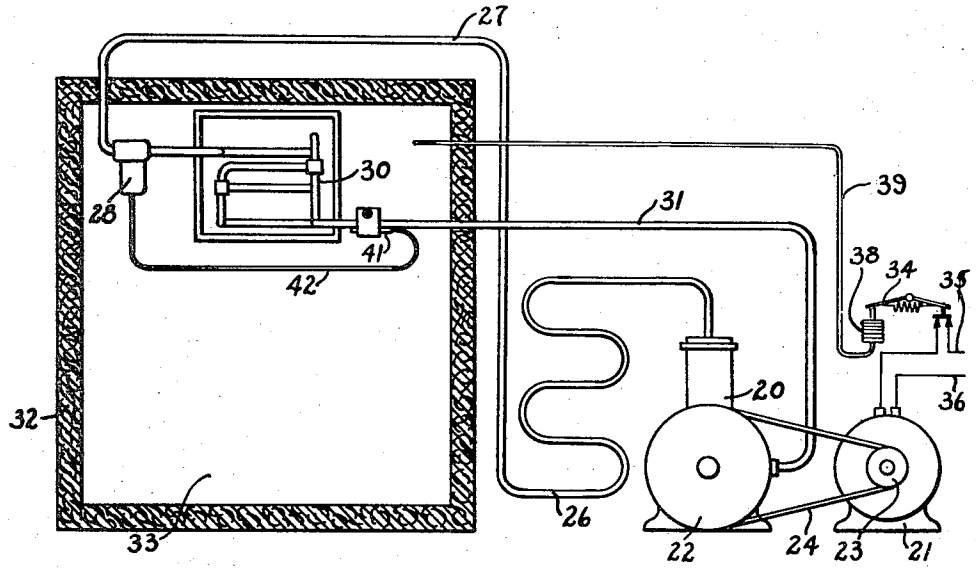

FIG. 1

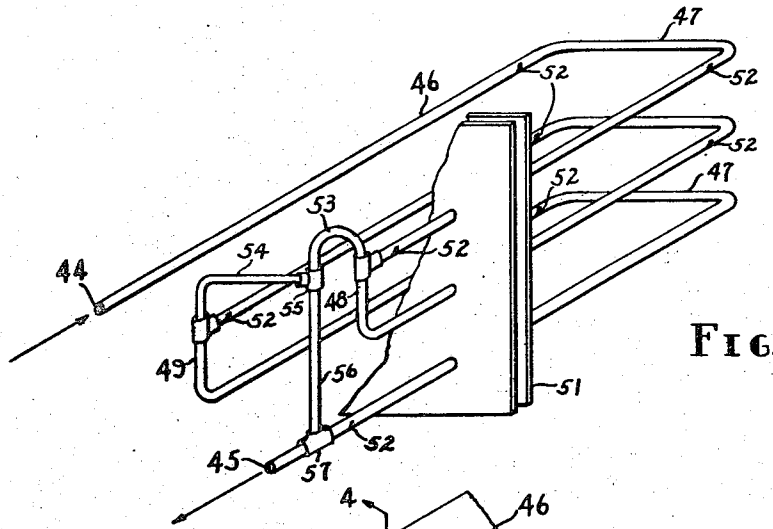

FIG. 2

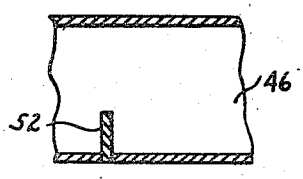

FIG. 4

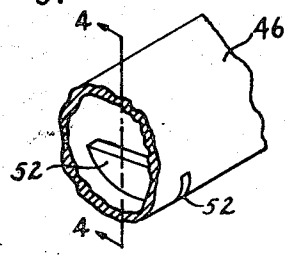

FIG. 3

INVENTOR.
PAUL HAYMOND
BY
Warren H. F. Schmieding
His Attorney

Patented Aug. 10, 1948 2,446,763

UNITED STATES PATENT OFFICE

2,446,763

REFRIGERANT EVAPORATOR

Paul Haymond, Fairmont, W. Va.

Application January 18, 1945, Serial No. 573,374

4 Claims. (Cl. 62—126)

1

The present invention relates to an evaporator for a refrigerating system and more particularly to the type of evaporator in which the sections forming the evaporator are connected so that the liquid refrigerant flows serially through said sections and also connected so that gaseous or vapor refrigerant flows in parallel through said sections.

One of the objects of the present invention is to provide an evaporator for a refrigerating system having a plurality of substantially horizontally disposed duct sections and in which a dam is disposed intermediate the duct sections, the dam stopping short of the top of the duct so as to dam the flow of liquid. The adjacent section of the duct receives liquid refrigerant which spills over the dam. In addition to the outlet for gaseous refrigerant at the end of the last section to receive refrigerant, there is provided another outlet or other outlets for gaseous refrigerant intermediate the ends of the entire duct system.

In carrying out the foregoing object, it is a further object of the present invention to interpose the second mentioned gaseous refrigerant outlet near the dam.

Furthermore, in carrying out the above mentioned objects, it is an object of the present invention to arrange the horizontally disposed sections of the duct in different planes and connect the same with vertically extending sections and to provide the inlet for liquid refrigerant at the top of the evaporator and the last gaseous refrigerant outlet at the bottom of the evaporator.

Further objects and advantages of the present invention will be apparent from the following description, reference being had to the accompanying drawings wherein a preferred form of embodiment of the invention is clearly shown.

In the drawings:

Fig. 1 is a diagrammatic view of a refrigerating system showing one form of my improved evaporator connected therein;

Fig. 2 is a perspective view of one form of the improved evaporator showing only a fragment of the heat conducting fins;

Fig. 3 is a fragmentary sectional view of a portion of one of the ducts and showing the dam therein; and

Fig. 4 is a fragmentary sectional view taken on line 4—4 of Fig. 3.

The present evaporator is suitable for substantially any type of artificial refrigerating system and for the purpose of illustrating one form of the invention, I have shown the same as applied to a refrigerating system of the compressor-condenser-expansion type. Referring to the drawings, a compressor 20 is shown as driven by an electric motor 21 through pulleys 22 and 23 and a belt 24. The compressed refrigerant from the compressor enters a condenser 26 wherein the gaseous refrigerant is liquified and is conducted from the bottom of the condenser 26 by a pipe 27 to a pressure reducing element 28, whence the refrigerant under low pressure flows to the evaporator, which is generally indicated by the numeral 30. Gaseous refrigerant is withdrawn from the evaporator 30 through a pipe 31 to the low pressure side of the compressor 20.

2

The evaporator 30 is shown enclosed in a refrigerator box 32 forming a refrigerated compartment 33. The operation of the motor is controlled by either the temperature of the evaporator or the compartment cooled thereby and is herein shown as being controlled by the temperature of the compartment 33. For this purpose, there is provided a snap acting switch 34 for interrupting and completing the circuit through the electrical conductor 35. The other electrical conductor is shown at 36. The snap acting switch is actuated through a bellows 38 which is connected by a small diameter tube 39 which terminates in the compartment 33. The bellows 38 and tube 39 contain an expansible and contractible fluid.

Any suitable type of pressure reducing element may be employed between the condenser 26 and the evaporator 30 and the element herein diagrammatically shown at 28 is shown as a thermostatically controlled expansion valve. This type of valve usually employs a needle valve which is actuated by a diaphragm and the diaphragm is subjected to the pressure in the evaporator for increasing the flow of refrigerant to the evaporator upon decrease in pressure of refrigerant in the evaporator and vice versa, and the action of the needle is modified in response to the temperature at the outlet of the evaporator, the effect being to close the needle valve upon its seat when the temperature of the outlet of the evaporator decreases to a predetermined temperature. For this purpose, there is provided a closed thermostatic system including a temperature responsive element 41 which is suitably clamped at the outlet of the evaporator and which is connected by a tube 42 to the valve 28. This thermostatic system also includes an expansible and contractible fluid.

Referring specifically to Fig. 2, the inlet to the evaporator 30 is at 44 and the outlet at 45. The duct means which forms the evaporator com-

prises a plurality of elongated and substantially horizontally disposed duct sections 46 and 47 which are connected with like-sections disposed in different horizontal planes by vertically extending duct sections 48 and 49. Suitable heat conducting fins 51 are attached to the ducts.

A plurality of dams 52 are provided at suitably spaced intervals. These dams 52 stop short of the top of the duct so as to provide an over-flow for liquid refrigerant, as for example, from the section 46 to the section 47. These dams may be formed in any suitable manner and are herein shown as a metallic insert soldered in position. When the thermostatically controlled expansion valve 28 is properly adjusted, liquid refrigerant will flow into inlet 44 to pipe section 46 filling this section to the height of the dam 52. When this level has been reached, the liquid will overflow dam 52 filling section 47 to the height of the next dam 52 and so on until all tubes on the same horizontal plane are filled. When the last section on the horizontal plane is filled the liquid will overflow the last dam 52 down the duct 48 to the first section of the next horizontal duct and continue overflowing dams on this horizontal group of tubes until it reaches vertical duct 49 and so on until it reaches the last dam 52, close to the outlet 45.

When the liquid overflows the last dam at 45 the coil will be filled with a predetermined amount of liquid to the proper levels in each section created by dam 52. The liquid spilling over the last dam close to 45 will have a cooling affect on the duct connecting the evaporator to the compressor. The bulb 41 controlling expansion valve 28 clamped to the duct 31 at a point close to 45 so that the affect from the liquid spilling over the last dam will stop the flow of refrigerant through expansion valve 28.

By providing the dams as herein disclosed, liquid refrigerant is maintained throughout substantially the entire length of the evaporator of the type in which all sections thereof are connected in series circuit relation. Gaseous refrigerant generated in one section can flow to the next adjacent section over the tops of the dams 52.

I have discovered that highly improved results are obtained by withdrawing gaseous refrigerant at intervals throughout the length of the duct system and in the present embodiment, two supplementary gaseous outlets are disclosed. These outlets are provided by ducts 53 and 54 which are connected by a fitting 55 to a duct 56 which, in turn, is connected to the main outlet end of the evaporator by a fitting 57. It will, of course, be understood that the inlet end of the ducts 53 and 54 are connected to the top of the respective horizontal duct sections so as to provide for the free flow of gaseous refrigerant from the evaporator duct sections. By providing a plurality of supplementary outlets, as herein disclosed, a substantially equal pressure is maintained throughout the length of the duct system of the evaporator.

One of the advantages of the present invention is that a substantially even temperature is maintained throughout the entire height of the evaporator. This advantage is attributed to the fact that liquid refrigerant is substantially equally distributed throughout the entire evaporator, to the fact that substantially equal pressure is maintained throughout the length of the evaporator and to the fact that, at times, the refrigerant effect at the top of the evaporator is

greater than the bottom to thus compensate for the decrement of air temperature descending about the fins and ducts of the evaporator. A refrigerant system of the type herein shown is usually operated cyclically i. e. it has a running phase and an idle phase. At the start of the running phase, the refrigerating effect at the top of the evaporator will be greater than at the bottom because the liquid refrigerant will fill the upper levels before it overflows to the next lower level. The respective succeeeding next sections will not receive liquid refrigerant until it overflows the dam in the predecessor sections. Thus, at times, the surface of the next preceding section is in contact with liquid refrigerant longer with the result that at times the refrigerating effect is greatest at the top of the evaporator and progressively somewhat less, downwardly.

Under certain conditions, it may be desirable to maintain more liquid refrigerant in the upper part of the evaporator than in the lower part, or vice versa, and in such case, the levels of liquid refrigerant can be varied by providing dams of different heights. However, in general practice, it has been found that substantially the same temperature can be maintained throughout the entire height of the evaporator with dams of equal height.

Often it is necessary to operate the evaporator at such a temperature that frost collects thereon. By virtue of the present invention, the thickness of frost upon the fins is substantially the same throughout the height of the evaporator although the top of the evaporator is subjected to the warmest downwardly circulating air. This is attributed to the fact that the mean refrigerating effect is greatest at the top of the evaporator and the lowest at the bottom due to the progressive spilling of liquid refrigerant from the top toward the bottom of the evaporator after the starting of the running phase. Several long sought advantages follow from this construction. During the major part of the running phase, liquid refrigerant is substantially equally distributed through the entire length of the evaporator and this naturally enhances the efficiency of the refrigerating system. Although ice may form on the fins, the thickness thereof is substantially equal throughout the height of the evaporator; the undesirable insulating characteristics of the ice, which tends to impair the efficiency of heat exchange between the air and the liquid refrigerant is minimized by causing the same to spread substantially equally throughout the height of the evaporator. In this manner, the differential between the temperature of the liquid refrigerant and the desirable air temperature can be reduced, thus resulting in a higher liquid refrigerant temperature and an improvement of the efficiency of the system. Moreover, it is necessary, at intervals, to defrost the ice from the evaporator. Since the ice is distributed substantially evenly on the fins and ducts throughout the height of the evaporator, complete defrosting will occur substantially simultaneously throughout the entire height of the evaporator and in this manner, the defrosting period can be minimized.

While the form of embodiment of the present invention as herein disclosed constitutes a preferred form, it is to be understood that other forms might be adopted, all coming within the scope of claims which follow:

I claim:

1. An evaporator for a refrigerating system

comprising duct means forming two elongated and substantially horizontally disposed duct sections arranged in different substantially horizontal planes and connected in series circuit relation by a vertically extending duct section, one end of the upper section having means for connecting same with the high pressure side of a refrigerating system and the end of the lower section having means for connecting the same with the low pressure side of the system, means forming a dam in each of said sections, said dam means stopping short of the top of the respective duct section in which it is disposed for retaining a quantity of liquid refrigerant in each of the sections and providing for the free flow of gaseous refrigerant, and means for forming a second outlet for gaseous refrigerant, and adapted to be connected with the low pressure side of said system, said second outlet being disposed intermediate the ends of the duct means.

2. An evaporator for a refrigerating system comprising duct means forming two elongated and substantially horizontally disposed duct sections arranged in different substantially horizontal planes and connected in series circuit relation by a vertically extending duct section, one end of the upper section having means for connecting same with the high pressure side of a refrigerating system and the end of the lower section having means for connecting the same with the low pressure side of the system, means forming a dam in each of said sections, said dam means stopping short of the top of the respective duct section in which it is disposed for retaining a quantity of liquid refrigerant in each of the sections and providing for the free flow of gaseous refrigerant, and means forming a second outlet connected with the duct means above the upper level of the dam forming means and intermediate the ends of the duct means, said second outlet being adapted to be connected with the low pressure side of said system.

3. An evaporator for a refrigerating system comprising duct means forming two elongated and substantially horizontally disposed duct sections arranged in different substantially horizontal planes and connected in series circuit relation by a vertically extending duct section, one end of the upper section having means for connecting same with the high pressure side of a refrigerating system and the end of the lower section having means for connecting the same with the low pressure side of the system, means forming a dam in each of said sections, said dam means stopping short of the top of the respective duct section in which it is disposed for retaining a quantity of liquid refrigerant in each of the sections and providing for the free flow of gaseous refrigerant, and means forming a second outlet for gaseous refrigerant connected with the duct means adjacent said dam forming means and adapted to be connected with the low pressure side of the system.

4. An evaporator for a refrigerating system comprising duct means forming two elongated and substantially horizontally disposed duct sections arranged in different substantially horizontal planes and connected in series circuit relation by a vertically extending duct section, one end of the upper section having means for connecting same with the high pressure side of a refrigerating system and the end of the lower section having means for connecting the same with the low pressure side of the system, means forming a dam in each of said sections, said dam means stopping short of the top of the respective duct section in which it is disposed for retaining a quantity of liquid refrigerant in each of the sections and providing for the free flow of gaseous refrigerant, and means forming a second outlet connected with the duct means adjacent said dam and above the upper level of the dam forming means, said second outlet being adapted to be connected with the low pressure side of the system.

PAUL HAYMOND.

REFERENCES CITED

The following references are of record in the file of this patent:

UNITED STATES PATENTS

Number	Name	Date
1,994,037	Gay	Mar. 12, 1935
2,326,900	Thomas	Aug. 17, 1943
2,328,195	Coons	Aug. 31, 1943

FOREIGN PATENTS

Number	Country	Date
191,263	Great Britain	Jan. 11, 1923