Jan. 26, 1965 E. T. BERG 3,166,816

MOLD MEMBER FOR FORMING A CONTROL JOINT

Filed Sept. 12, 1963

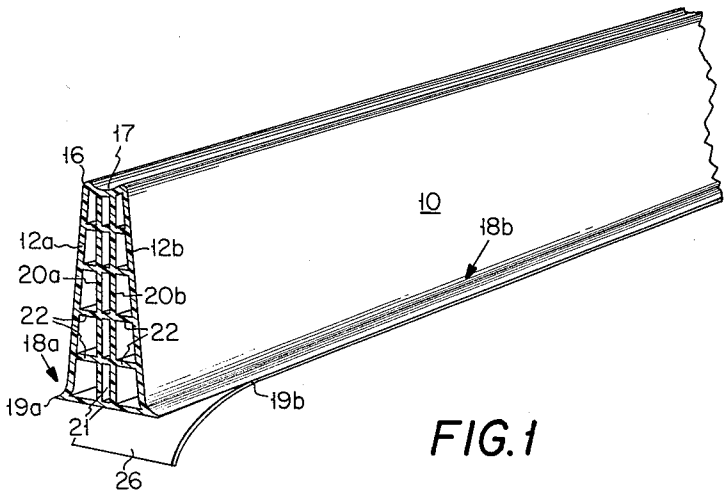

FIG. 1

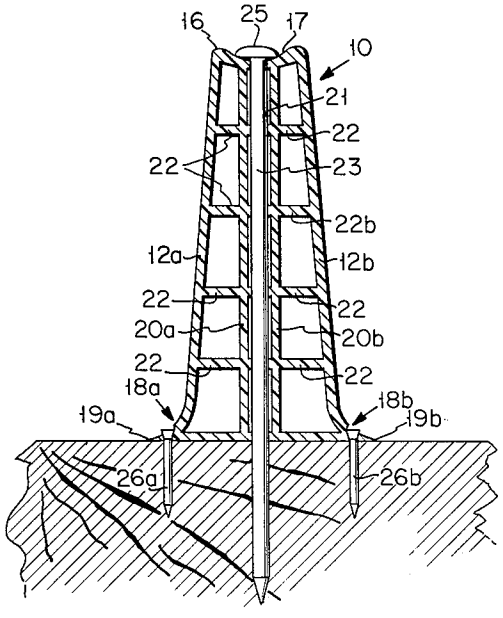

FIG. 2

INVENTOR.
EDWARD T. BERG

BY

United States Patent Office 3,166,816 Patented Jan. 26, 1965

3,166,816
MOLD MEMBER FOR FORMING A CONTROL JOINT

Edward T. Berg, 275 Santa Clara Ave., San Francisco, Calif.

Filed Sept. 12, 1963, Ser. No. 308,573
2 Claims. (Cl. 25—128)

The present invention relates to the construction of concrete walls. When large areas of concrete settle and/or are exposed to changes in temperature, they form jagged cracks which extend at random in all directions. These cracks disfigure the outer face of the wall and may weaken its structure. It has been found that by providing straight longitudinal and/or vertical grooves or recesses known as "control joints" in the outer surface of a concrete wall during the construction thereof, the crack formation may be made to follow the bottom of these grooves or recesses so that the cracks are removed from view. At the same time, the described control joints impart a pleasing ornamental appearance to the outside of the concrete structures.

The simplest way to form these so-called control joints in the outer surfaces of concrete walls and like concrete structures, is to secure mold members to the inner surfaces of the boards that form the mold for the concrete structure, and for this purpose sheet metal channels of appropriate cross-sectional contour have been secured in the proper position and at the proper intervals to the inner surfaces of the mold boards. However, in practice, the use of such sheet metal channels for the described purpose has several disadvantages. For the control joints to be effective in guiding and confining the inevitable crack formation, they should be as perfectly straight as possible. Large concrete structures, however, require control joints of substantial length, and since sheet metal channels have to be transported, and are traded, in sections of limited length, it is often necessary to splice several channel sections together. This is not only costly and time-consuming, but it also interferes with the straightness of the control joints in the areas where these channel sections are joined together. In fact, sheet metal channels when of substantial length show a tendency to droop or warp which does not only reduce the effectiveness of the resultant control joints in guiding and confining the crack formation, but may render the appearance of the concrete structure unsightly. Furthermore, sheet metal channels have to be provided with flanges so that they may be secured to the boards of the mold, and since sheet metal channels are always of substantial thickness, the edges of these flanges cause the formation of narrow, sharp-cornered shoulders along the outer edges of the control joints and these shoulders chip easily and thus mar the appearance of the outer surface of the concrete structures.

It is an object of my invention to provide an effective yet inexpensive mold member for the formation of control joints in the construction of concrete walls and similar large-sized concrete structures.

More particularly, it is an object of my invention to provide a mold member, of the type referred to, that may be made of any desired length, without introducing any unevenness.

Still another object of the invention is to provide a mold member of the type referred to, that will not cause the formation of sharp-edged shoulders along the recess of the control joint.

Furthermore, it is an object of the invention to provide a mold member of the type referred to, that may easily be removed from the finished wall without injury to either the wall or itself, and may therefore be re-used in other concrete constructions.

These and other objects of the present invention will be apparent from the following description of the accompanying drawing which illustrates a preferred embodiment of the invention and wherein—

FIGURE 1 is a fragmentary perspective of a mold member for the control joints of concrete walls; and

FIGURE 2 is a fragmentary section through the mold of a concrete wall, wherein the mold member of the present invention has been installed.

Having first reference to FIGURE 1, the mold member of the present invention has the form of an elongated hollow bar **10** that is perferably made from an extruded plastic of appropriate rigidity such as, for instance, medium density polyethylene, rigid polyvinyl chloride or polypropylene but also may be made of extruded metal, such as extruded aluminum. The bar has slightly converging side surfaces **12***a* and **12***b*, and the end edge of said bar at the diverging ends of said sides forms a flat, transversely extended base surface **14** while its opposite end edge **16** is relatively narrow and forms a shallow external groove or recess **17**. At their diverging ends the side surfaces **12***a* and **12***b* flare outwardly to form longitudinally extending flanges **18***a* and **18***b* that end in sharp edges **19***a* and **19***b*, respectively. The depth of the bar, i.e., the distance between its base surface and its peak is preferably from three to four times as large as its transverse width directly above the flanges **18***a* and **18***b*. As pointed out hereinbefore, the bar **10** is preferably hollow to reduce its weight and lessen its cost; and within its interior it is provided with two relatively spaced longitudinal walls or partitions **20***a* and **20***b*; and a number of relatively spaced cross members or braces **22** are interposed between the outer walls of the bar and said internal partitions **20***a* and **20***b* to increase the power of resistance of both, said outer walls and said partitions, to bending or warping.

When a mold for the construction of a concrete wall is set up, the mold members **10** are secured in their proper positions to the boards **24** that form the wall of the mold. This is accomplished by driving long slender nails **23** from the side of the groove **17** through the superposed central channels **21** formed by and between the partitions **20***a*, **20***b* and the cross pieces **22** into the board **24** until the heads **25** of said nails rest in said groove as illustrated in FIGURE 2. Additionally, slender nails **26***a* and **26***b* may be driven through the flanges **18***a* and **18***b*, respectively, into said boards. Additionally or alternatively, the mold members **10** may be glued to the boards along their base surfaces **14**, such as by means of the adhesive tape shown at **28** in FIGURE 1, which has adhesive surfaces on both sides. The use of adhesive tapes for securing the mold member in position in the concrete molds has the advantage that the mold members thus secured to the boards of a concrete mold may more easily be detached from the boards for re-use in other installations.

After the members **10** have been properly secured to the mold wall **24**, the concrete may be poured; and if the mold member of the invention is made from a self-lubricating plastic, such as the hereinbefore mentioned polyethylene, it is unnecessary to coat the outer surfaces of the member with a lubricant before pouring the concrete, as has previously been necessary. When the concrete has matured and the mold is torn down, the mold members of my invention may easily be removed from the newly constructed wall, due to their tapering cross-sectional contour and due to the fact that the nails **23** hold the members securely to the boards **24**. The mold members may, therefore, be recovered intact and may repeatedly be re-used, which means a substantial saving in the cost of construction of a concrete structure. The resultant control joints are absolutely straight and form no

sharp edges with the front surface of the concrete structure, such as are liable to chip or break and disfigure the outer face of the structure. The mold members of the invention may be made of any desired length, and may readily be cut or sawed into segments of precisely the required length. Therefore, they do not have to be spliced. Also, due to their tubular character and the braces **22** provided in their interior, they will not warp, droop or bend. As a result thereof the control joints are perfectly straight and effectively confine the formation of cracks to an area along their bottom where they are not noticeable.

While I have described my invention with the aid of a particular embodiment thereof, it will be understood that the invention is not limited to the specific constructional details shown and described by way of example, which may be departed from without departing from the scope and spirit of my invention.

I claim:

1. For forming control joints in the construction of concrete structures, a mold member in the form of an elongated hollow bar having converging side surfaces possessing outwardly flaring end areas at their divergent ends, a narrow end edge portion at the convergent ends of said side surfaces, said end edge portion possessing a shallow longitudinal groove, opposite said narrow end edge portion a flat base surface arranged to form sharp edges with said outwardly flaring end areas of said side surfaces, and a pair of relatively spaced longitudinal partitions extending from points near the bottom of the groove in said narrow edge portion to points near said base surface to form a centrally located, longitudinally extending channel in the interior of said bar for the guidance of nails driven through the mold member from said groove.

2. For forming control joints in the construction of concrete structures, a mold member in the form of an

elongated hollow bar having converging side surfaces possessing outwardly flaring end areas at their divergent ends, a narrow end edge portion at the convergent end of said side surfaces, said end edge portion possessing a shallow longitudinal groove, opposite said narrow end edge portion a flat base surface arranged to form sharp edges with the outwardly flaring end areas of said side surfaces, a pair of relatively spaced longitudinal partitions extending from points near the bottom of the groove in said narrow edge portion to points near said base surface to form a channel in the interior of the mold member for the guidance of nails driven through said member from said groove, and a plurality of relatively spaced braces extending between said side surfaces through said partitions to resist deformation of the side walls of the mold member when concrete is poured thereagainst.

References Cited by the Examiner

UNITED STATES PATENTS

1,320,222	10/19	Gage	25—118
1,885,287	11/32	Porter et al.	25—122
1,890,412	12/32	Rogers	25—118
1,958,391	5/34	Hall et al.	94—18 XR
2,552,664	5/51	Burdine	117—122
2,590,933	4/52	Carter	94—18 XR
2,608,503	8/52	Meyer	117—122
2,953,835	9/60	Armstrong et al.	
2,985,938	5/61	Roppas.	
3,052,945	9/62	Cummings	25—118

FOREIGN PATENTS

861,385	2/61	Great Britain.

MICHAEL V. BRINDISI, *Primary Examiner.*

ROBERT F. WHITE, *Examiner.*