United States Patent [19]

Edmund

[11] **3,887,205**

[45] **June 3, 1975**

[54] **SAFETY SKI BINDING**

[76] Inventor: **James Mitchell Edmund,** 5262 Olde Stage Rd., Boulder, Colo. 80302

[22] Filed: **Sept. 18, 1973**

[21] Appl. No.: **398,447**

[52] **U.S. Cl.** ..... **280/11.35 K;** 280/11.35 C

[51] **Int. Cl.** **A63z 9/08**

[58] **Field of Search**... 280/11.35 K, 11.35 C, 11.35 T, 280/11.35 R

[56] **References Cited**

UNITED STATES PATENTS

3,271,040	9/1966	Spademan	280/11.35 T
3,448,990	6/1969	Cubberley et al.	280/11.35 C
3,494,628	2/1970	Spademan	280/11.35 D
3,578,349	5/1971	Edmund	280/11.35 K
3,642,297	2/1972	Edmund	280/11.35 K
3,675,938	7/1972	Sigl	280/11.35 C

FOREIGN PATENTS OR APPLICATIONS

1,558,544	1/1969	France	280/11.35 C
1,478,088	6/1969	Germany	280/11.35 C
2,129,391	12/1971	Germany	280/11.35 C

Primary Examiner—David Schonberg
Assistant Examiner—Milton L. Smith
Attorney, Agent, or Firm—Craig & Antonelli

[57] **ABSTRACT**

A safety ski binding which includes a ski plate adapted to be fastened onto the ski, a boot plate adapted to be fastened to the bottom side of the boot sole of a ski boot intermediate its heel and toe portion; rollers are rotatably secured to the sides of the ski plate for cooperation with the boot plate while levers which are pivotally secured to the side of the ski plate rearwardly of the rollers include forward boot-plate engaging portions so as to hold by spring action the boot plate onto the surface of the roller means in the engaged position of the ski binding while enabling the boot plate to ride over the roller means in case of a forward fall with predetermined force; the ski plate thereby constitutes the sole contact between the boot and the ski so that the ski can bend upon encountering an obstruction without substantially affecting the clamping action of the binding.

36 Claims, 10 Drawing Figures

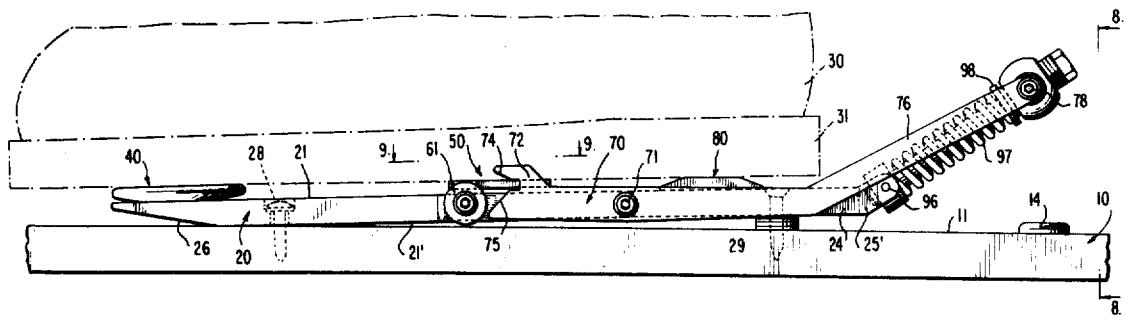

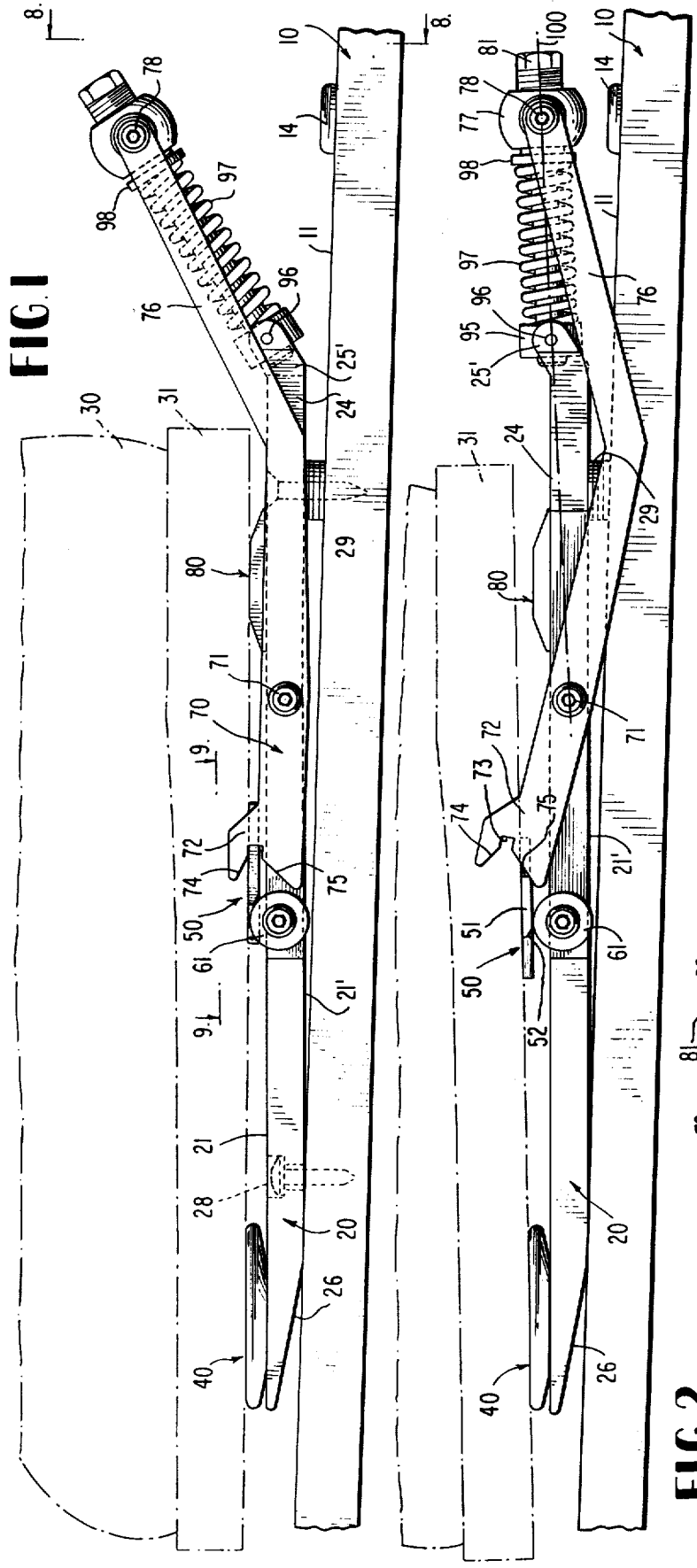

FIG. 1

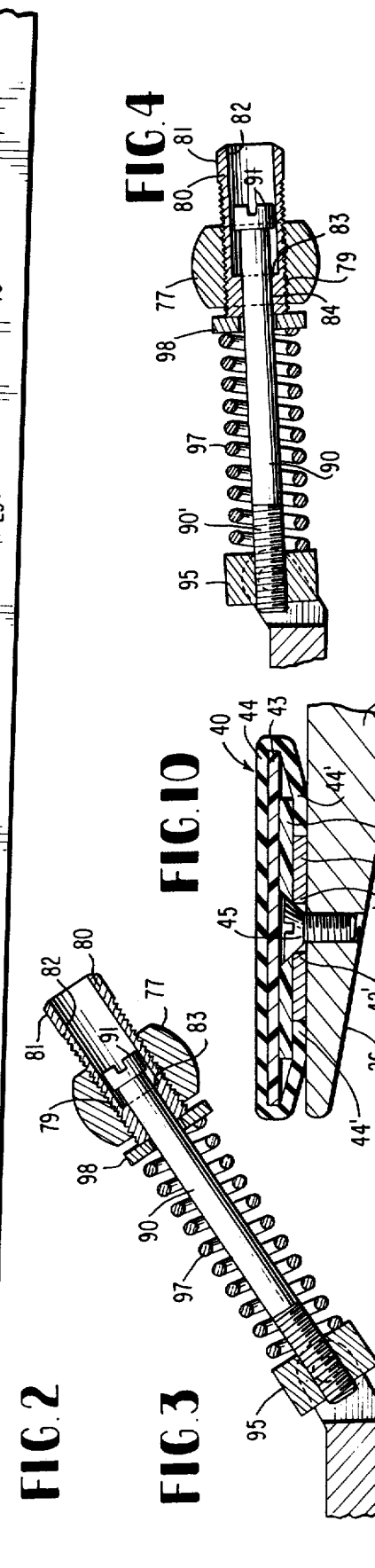

FIG. 2

FIG. 3

FIG. 4

FIG. 10

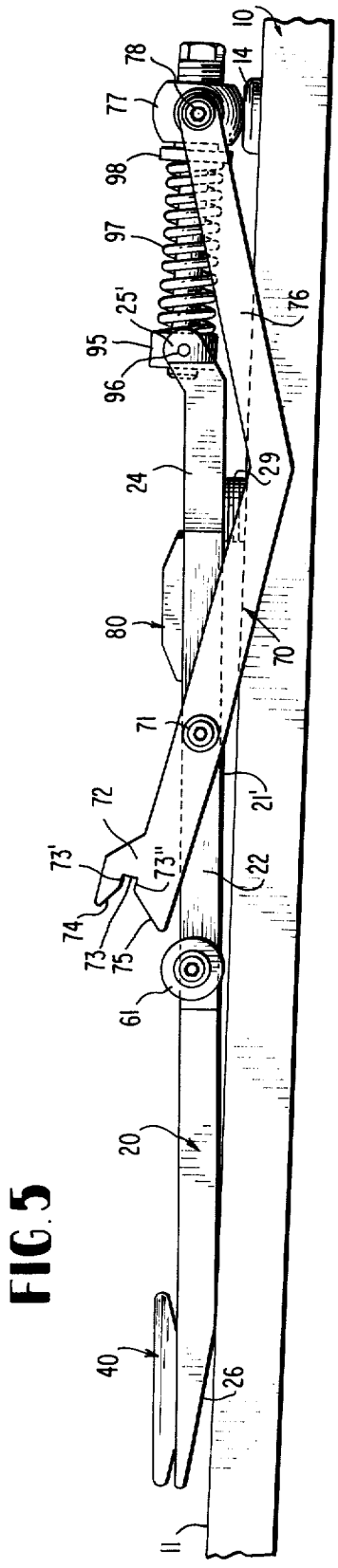

FIG. 5

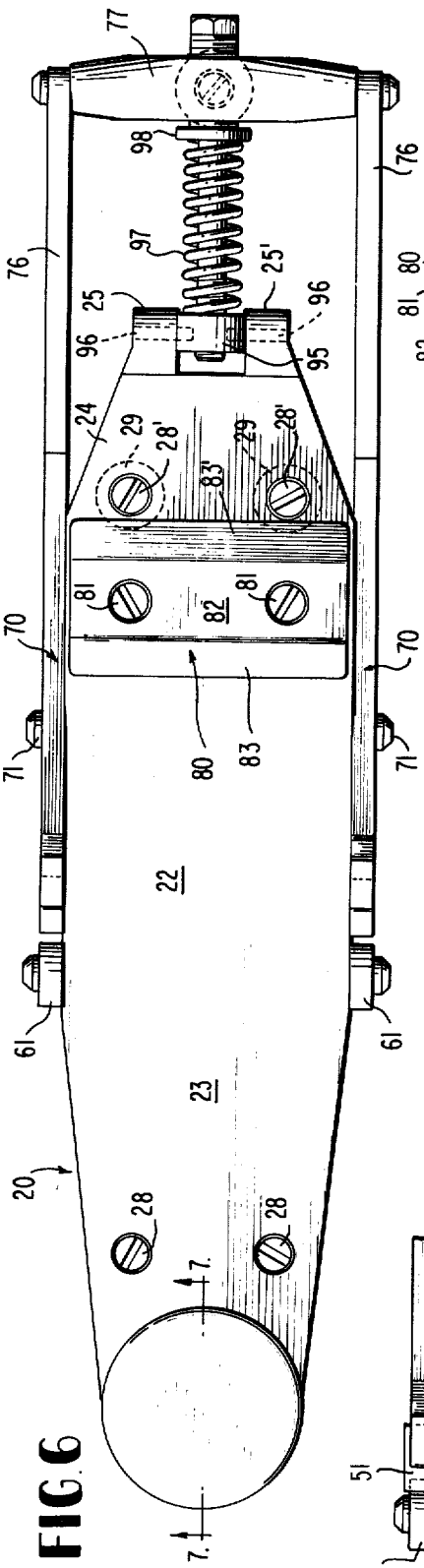

FIG. 6

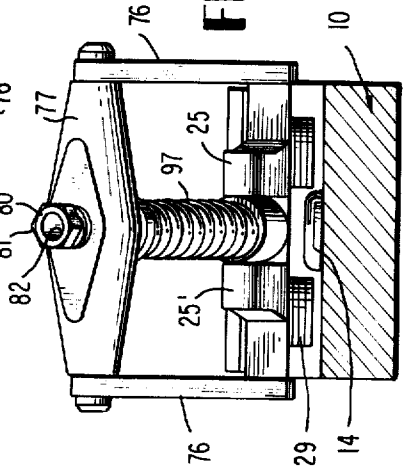

FIG. 8

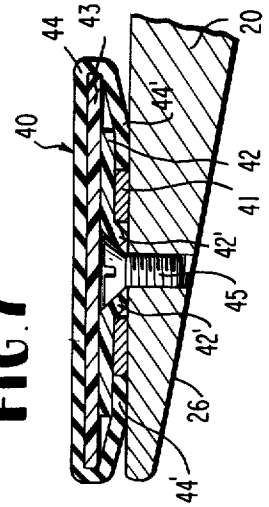

FIG. 7

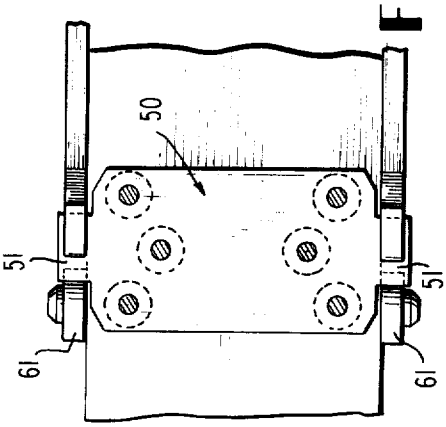

FIG. 9

SAFETY SKI BINDING

The present invention relates to a safety ski binding and to an improved anti-friction device for use with the same.

Safety ski bindings of the most varied types are presently in use. Some of these use toe release devices and others heel release devices while still others use both toe and heel release devices. On the other hand, safety ski bindings are also known in which the ski boot is releasably held as a point intermediate the toe and heel of the boot. The U.S. Pat. Nos. 3,271,040 and 3,494,628 to Spademan as well as my own prior U.S. Pat. No. 3,578,349 are representative of this type of approach which, as described in my prior U.S. Pat. No. 3,578,349, entails numerous advantages as regards reliability of operation and safety compared to other types of ski bindings.

The present invention is concerned with a further improvement in the ski binding of the type described in my prior U.S. Pat. No. 3,578,349, which not only offers greater ease of engagement with the ski binding as well as disengagement from the binding but provides additional significant features and advantages as will be described more fully hereinafter.

More particularly, in the safety binding according to the present invention, the ski plate is the only means of contact between the boot and the ski, as contrasted with the binding as described in my prior U.S. Pat. No. 3,578,349 in which the forward area of the boot sole rested on a pad separately secured to the ski. When the ski plate is the only means of contact between the boot and the ski, the ski is able to bend sharply, for example, when hitting a bump in the snow, without affecting the firmness of the clamping action of the ski binding. As a result thereof, there is no tendency to lift the boot vertically out of engagement with the binding as might be the case in my prior patent when the ski bends, which might result in an immediate, undesired release or causes a momentary partial disengagement with the likelihood of an undesired release due to relatively minor twisting forces on the ski.

Additionally, the ski binding of the present invention also offers greater ease of engagement and disengagement of the ski binding since it involves aa simple step-in action for boot engagement and a simple release by a push down force, for example, with the top of a ski pole, on the rear yoke of the binding to cause disengagement of the binding. Since the release of the binding can be effected from an upright stance, i.e., without having to bend down, the safety ski binding of the present invention entails significant convenience to the skiers.

Additionally, the ski binding of the present invention also takes into consideration the recent findings as regards reliability of operation under all conditions, which is jeopardized in many existing bindings as a result of a shift in the weight of the skier, for example, forwardly, causing an increase in the friction between the boot sole and the top of the support surface of the ski on which it rests, thereby increasing the force necessary to cause release of the binding by a multiple over the intended force at which the binding was intended to release. To that end, the present invention also provides a novel anti-friction device for supporting the front portion of the ski boot which is not only simple and relatively inexpensive in manufacture and design

but is uniquely dirt- and moisture-proof, thereby enhancing reliability of twist release when the skier falls in a forwardly twisting manner.

Accordingly, it is an object of the present invention to provide a safety ski binding which avoids by simple means the aforementioned shortcomings and drawbacks encountered in the prior art.

Another object of the present invention resides in a safety ski binding which is simple in construction, yet greatly facilitates engagement with the binding and disengagement from the binding.

A further object of the present invention resides in a safety ski binding of the type described in my prior U.S. Pat. No. 3,578,349 which offers significant advantages as regards reliability in operation under all skiing conditions.

Still another object of the present invention resides in a safety ski binding which is simple in construction yet assures reliable release under all conditions without requiring complicated mechanisms that complicate, in turn, the attachment and release of the ski from the boot.

A further object of the present invention resides in a safety ski binding with an anti-friction device which is simple in construction, uniquely dirt- and moisture-proof in design and highly effective to assure proper operation of the release of the binding regardless of any shift in the weight of the skier at the time the intended release is to take place.

These and further objects, features and advantages of the present invention will become more apparent from the following description when taken in conjunction with the accompanying drawing which shows, for purposes of illustration only, one embodiment in accordance with the present invention, and wherein:

FIG. 1 is a side elevational view of a safety ski binding in accordance with the present invention with the various parts thereof in the normal boot-engaging position;

FIG. 2 is a side elevational view, similar to FIG. 1, illustrating the position of the safety ski binding in accordance with the present invention in the course of a twist-out release action to the right, i.e., clockwise as viewed in top plan view;

FIG. 3 is an axial cross-sectional view, on a somewhat enlarged scale, illustrating certain details of the spring-loaded release mechanism in the yoke structure of the safety ski binding according to the present invention with the various parts in the position shown in FIG. 1;

FIG. 4 is an axial cross-sectional view, similar to FIG. 3, showing the parts thereof in a position of the ski binding illustrated in FIG. 2;

FIG. 5 is a side elevational view of the safety ski binding, with the boot omitted, and showing the various parts in the fully opened position;

FIG. 6 is a top plan view of the safety ski binding of FIG. 5;

FIG. 7 is a cross-sectional view through the anit-friction device in accordance with the present invention, taken along line VII-VII of FIG. 6, and showing the parts thereof on a slightly enlarged scale;

FIG. 8 is a rear elevational view of the spring-loaded yoke structure of the safety release mechanism in accordance with the present invention in the position shown in FIG. 1;

FIG. 9 is a partial top plan view taken along line IX—IX of FIG. 1, and showing the boot plate in the po-

sition when the boot is normally firmly held onto the ski by the safety binding as illustrated in FIG. 1; and

FIG. 10 is a cross-sectional view similar to FIG. 7, through a modified embodiment of an anti-friction device in accordance with the present invention.

The safety ski binding according to the present invention is characterized by a unitary ski plate, constituting the sole means of contact between the boot and the ski which is mounted onto the top surface of the ski and on which rests the sole of the boot, preferably by the interposition of an anti-friction device; the ski boot is provided with a boot plate cooperating with laterally secured roller members secured at the ski plate in such a manner that a correspondingly designed spring-loaded lever member pivotally mounted to each side of the ski boot normally holds the boot plate firmly against the surface of the roller member as a result of the spring force of a spring-loaded yoke structure extending to the rear of the boot and accommodated between the rearward extensions of the lever members in such a manner that the attachment of the ski involves a step-in action while it is merely necessary to apply a force to the yoke structure, for example, by means of the tip of the ski pole to effect release of the binding due to a toggle action of the lever members. Additionally, an anti-friction device is provided between the toe area of the ski boot sole and the ski plate, thereby enhancing the reliability of twist release when the skier falls in a forwardly twisting manner.

Referring now to the drawing wherein like reference numerals are used throughout the various views to designate like parts, reference numeral **10** generally designates a ski of any conventional type onto the top surface **11** of which is mounted a one-piece metallic ski plate generally designated by reference numeral **20.** The ski plate **20** may be, for example, of aluminum, and includes a substantially flat, rectangular main portion **22** (FIG. **6**) which is adjoined forwardly thereof by a portion **23** tapering toward the tip of the ski as viewed in plan view (FIG. **6**) and adjoined rearwardly thereof by a rear portion **24** tapering in the direction toward the rear end of the ski (FIG. **6**). The rear portion **24** in turn is adjoined by two parallel, rearwardly upwardly extending yoke portions **25** and **25'**. Whereas the thickness of the ski plate **20** is substantially constant over most of its length, its thickness decreases near the front end thereof as indicated by the tapering bottom surface **26** (FIGS. **1, 2, 5** and **7**) to further accommodate the bending on the part of the ski. The ski plate **20** is secured to the top surface **11** of the ski **10** in any suitable manner, for example, by two front screws **28** and two rear screws **28'** accommodated in corresponding countersunk portions provided in the top surface **21** of the ski plate **20.** Advantageously, a washer **29** (FIG. **1**) of any suitable material, for example, consisting of several stacked washer plates is interposed between the bottom surface **21'** of the ski plate **20** and the top surface **11** of the ski **10** to provide the proper position of the ski plate **20.** By selecting an appropriate number of the washer plates **29,** the inclination of the bottom surface **21'** of the ski plate **20** relative to the top surface **11** of the ski **10** may be chosen at will. As can be seen, the ski plate may thereby assume a substantially horizontal position even though the ski may have a somewhat concave configuration, causing the ski plate **20** to engage directly the surface **11** of the ski boot forwardly of the fastening screws **28.** (FIG. **1**). The ski boot **30** only schematically shown includes a boot sole **31** which rests on the ski plate by the interposition of an antifriction device generally designated by reference numeral **40** which is located near the front of the ski plate **20** within the area of the ball of the skier's foot. A boot plate generally designated by reference numeral **50** (FIGS. **1, 2,** and **9**) is suitably attached to the bottom of the sole **31** of the ski boot **30** by any suitable means, for example, either by means of screws or adhesively by any conventional gluing or bonding material as commercially available. As can be clearly seen in FIGS. **1** and **2,** the boot plate **50** is secured to the sole **31** of the boot **30** intermediate its heel and toe portion within the area of the instep of the skier's foot, as described in my prior U.S. Pat. No. 3,578,349.

The boot plate **50** includes laterally projecting portions **51** (FIG. **9**) cooperating with roller members **61** laterally secured to the ski plate **20** by any suitable means and with the front portion of lever members generally designated by reference numerals **70** are pivotally secured to the side of the plate by conventional pivotal mounting means **71** in a manner described in my prior U.S. Pat. No. 3,578,349 to hold the ski boot firmly onto the ski plate **20** in the engaged position of FIG. **1,** yet release the boot from the ski plate in the presence of certain forces causing the release of the safety ski binding, as also described in my aforementioned prior patent. Though not absolutely necessary, a heel support generally designated by reference numeral **80** and made, for example, of aluminum or low friction material, such as Teflon (trademark of E.I. du Pont de Nemours & Co. for its brand of polytetrafluoroethylene plastic), hereinafter referred to as Teflon, is provided within the area of the heel of the boot to provide additional supports if needed. Such a rounded or bevelled support for the heel, preferably of Teflon or similar low friction material is, in fact, highly desirable to reduce friction though not as important as in the toe area because in the heel area the effect of friction is not multiplied as in the toe area, by the weight of the skier thrown forward in a twisting release and the heel support is closer to the center or rotation than the toe support. The heel support member **80** is secured to the ski plate **20** by means of screws **81** and includes a relatively narrow portion **82** adjoined on each side by bevelled portions **83** and **83'**. Each lever member **70** includes forwardly of the point of pivotal connection **71** thereof a boot plate engaging portion **72** which is formed by a relatively short slot **73** of a width slightly larger than the thickness of the boot plate **50** and defined by two parallel surface portions **73'** and **73''**; the surface **73'** is adjoined by an obliquely, upwpardly extending camming surface **74,** while the surface **73''** is adjoined by a downwardly, forwardly inclined camming surface **75.**

As can be seen again in FIG. **2,** each laterally projecting portion **51** of the boot plate **50** is provided with a forwardly inclined camming surface **52** for engagement with the surface of the roller member **61** and is able to ride over the surface of the roller member **61** against the spring action of the release mechanism only in the presence of a predetermined force, as described in my aforementioned prior patent.

The lever members **70,** to the rear of the point of pivotal connection **71** thereof, include rearwardly extending lever portions **76** which are interconnected with each other at their upper free ends by a transversely ex-

tending member 77 connected pivotally thereto at 78. As can be seen in FIGS. 3 and 4, the transversely extending yoke-like connecting member 77 is provided in the central area thereof with a threaded bore 79 to permit an externally threaded adjusting member 80 to be screwed into the same. The adjusting member 80 is provided at its outer right end with a hexagonal portion 81 for engagement with a key (not shown) to facilitate the tension adjustment of the release mechanism as will be described more fully hereinafter. Over a substantial part of its length, the member 80 is also hollow to form a recess 82 defining thereby a stop surface 83 for the bolt head 91 of a bolt 90 for purposes to be described more fully hereinafter. The left portion of the adjusting member 80 is provided with a bore 84 slightly larger than the outer diameter of the shank of the bolt 90 so that the latter can be inserted through the bore 84 for engagement with its lower left end threaded portion 90' in the internally threaded bore of a circular trunnion member 95 (FIGS. 3 and 4), pivotally secured in the upwardly extending yoke portions 25 and 25' by means of pivot pins 96 (FIG. 6). A coil spring 97 which provides the spring action for the release mechanism rests with its lower left end against the trunnion member 95 and with its upper right end against a spring plate 98.

As can be readily seen, the pivotal levers 70 together with the yoke structure 77, 25, 25' and 95 form a toggle-type arrangement in which the spring 97 is subjected to maximum compression in the position of FIG. 2 when the pivot axes of the pivotal connections 71, 96 and 78 lie on a single line 100. Due to the configuration of the lever member 70, the pivot axes of the pivotal connections 78 and 90 and their respective locations, the spring 97, upon counterclockwise movement of the levers beyond the position of FIG. 2, will seek to cause the levers 70 to rotate counterclockwise about their pivotal connections 71 until the forwardly extending boot plate portion 72 causes the laterally projecting check portions 51 of the boot plate 50 to be firmly pressed against the outer surface of the roller members 61 thereby firmly holding the boot 30 onto the ski plate 20 and therewith onto the ski 10. As can also be readily seen from FIGS. 3 and 4, the force with which the spring 97 holds the boot 30 onto the ski plate 20 can be adjusted by means of adjusting member 80 so that the spring force and therewith also the release force will be the greater the further the member 80 is screwed into the connecting member 77, i.e., the more the spring 97 is compressed in the position shown, for example, in FIG. 3. Conversely, the force necessary to cause a release of the binding in case of a fall will be the less the further the member 81 is screwed out of the connecting member 77.

For attaching the boots onto the ski, i.e., for engaging the binding when in the fully opened position as shown in FIG. 5 where the member 77, due to toggle action, rests against the abutment 14 suitably secured to the top surface of the ski 10 by conventional means, it is only necessary for the skier to step with his boot into the binding, i.e., to cause engagement of the laterally projecting cheek portions 51 of the boot plate 50 with the camming surfaces 75 of the levers 70 and to apply a force onto the boot plate engaging portion 72 of the lever 70 to cause rotation thereof in the counterclockwise direction to such an extent that the binding passes through the dead-center position of FIG. 2 whereupon the toggle action will automatically cause the binding to become fully engaged. As mentioned before, the surface 75 thereby constitutes a guide surface guiding the cheek portions 51 of the boot plate 50 into the slot 73.

For purposes of release of the binding, it is only necessary to depress the member 77, for example, with the tip of the ski pole until it passes through the dead-center position of FIG. 2 from the position of FIG. 1 so that the toggle-action will cause automatic opening of the ski binding. For that purpose, the member 77 may be provided with an appropriate recess or hole to permit engagement of the ski pole. Thus, the ski binding of the present invention can be released, without the skier having to bend down, by the mere downward application of a force onto the yoke structure 77, 76.

The toggle-action of the binding of the present invention operates both for engaging and disengaging the binding, thereby facilitating both operations.

To avoid accidents due to the movement of the toggle-type safety release structure 70, 76, 77, 80, 90 and 95 in the engaging direction, i.e., in the counterclockwise direction as viewed in FIGS. 2 and 5, the counterclockwise pivoting movements of the levers 70 is limited even in the absence of a ski boot plate 50 by engagement of the bolt head 91 (FIG. 3) against the surface 83 when the described structure reaches a position slightly beyond the normally fully engaged binding position shown in FIG. 1. This is due to the fact that the stop surface 83 pivots effectively about the pivot axes of the pivotal connections 71 while the bolt member 90 is subjected to a pivotal movement about the pivot axes 96.

As mentioned before, an important feature of the present invention is the fact that the ski plate is the only means of contact between the boot and the ski. This permits the ski to bend sharply when hitting an obstruction during skiing without affecting the firmness of the clamping action of the ski binding. However, as also mentioned above, the correct operation of the release feature of the safety ski binding, i.e., the release at the intended force in the course of an accident depends on the constancy of the friction between the bottom surface of the sole 31 and the top of the ski plate 20. To that end, I provide an anti-friction device 40 which consists of a circular steel washer 41 over which is mounted a circular washer 42 of anti-friction material, such as "TEFLON". A disk 43 also made of anti-friction material, such as TEFLON, washer 42 while a neoprene capsule 44 or capsule of equivalent material is placed over the disk 43. The peripheral edges 44' of the capsule 44 are inverted inwardly and placed underneath the washer 42 so that the screws 45 having outwardly tapering screw head surfaces 45' which engage with the inner inclined ends 42' of the washer 43 hold the entire assembly in position when screwed into the ski plate 20.

The anti-friction device 40 of FIG. 7 may also be slightly modified in that the steel washer 41 is provided with a central hole barely enough to accommodate the screw body while the screw head of the flat head type screw fits in a conical hole of complementary shape provided or formed in the TEFLON washer 42. This conical hole may be formed, for example, by counter sinking with a cutting tool or by simple displacement of the TEFLON material and forcibly turning the screw down toward the steel washer 41, as shown in FIG. 10.

The anti-friction device 40 offers certain distinct advantages. On the one hand, it is extraordinarily dirt-

and moisture-proof since it is self-sealing over its entire circumference. On the other hand, it consists of relatively few parts which are relatively inexpensive and can be assembled onto the ski plate in a simple manner. Furthermore, these parts can be readily exchanged in case of wear or the like. Moreover, apart from these significant advantages, the anti-friction device **40** of the present invention also increases the reliability of twist release when the skier falls forwardly with the boot twisting as the anti-friction device **40** assures a constant friction force between the boot sole and the ski plate, the more so as in a forward fall, the weight of the skier shifts forwardly so that most, if not all, the weight and therewith the forces are supported on the anti-friction device **40** in case of such a fall.

While I have shown and described only one embodiment in accordance with the present invention, it is understood that the same is not limited thereto but is susceptible of numerous changes and modifications within the scope of those skilled in the art. For example, suitable substitute materials with analogous properties may be used for the various parts of the anti-friction device **40** including its individual members. Hence, I do not wish to be limited to the details shown and described herein but intend to cover all such changes and modifications as are encompassed by the scope of the appended claims.

What I claim is:

1. A safety ski binding which includes a ski plate adapted to be fastened onto the ski, a boot plate means adapted to be fastened to the bottom side of the sole of the ski boot intermediate its heel and toe portion, supporting means secured to the sides of the ski plate for cooperation with the boot plate means and lever means pivotally secured to the side of the ski plate rearwardly of the support means and having forwardly extending boot plate engaging portions to hold by spring-action the boot plate means onto the surface of the support means in the engaged position of the ski binding while enabling the boot plate means to ride over the support means in case of a forward fall with predetermined force, and spring means for resiliently urging the lever means in the engaging position with a predetermined force when the binding is engaged,

wherein anti-friction means are arranged between the front portion of the ski plate and the boot sole, said anti-friction means comprising:

a first washer means,

a second washer means with low-friction surfaces,

a disk means with low-friction surfaces,

and holding means for holding said first washer means and second washer means fixedly with respect to the ski plate with one side of said second washer means being supported at said first washer means and the other side of said second washer means supporting said disk means.

2. A ski binding according to claim **1,** wherein said ski plate is a unitary plate having a front portion tapering toward the tip of the ski.

3. A ski binding according to claim **2,** wherein the front portion of the ski plate which is relatively flat on its upper side, decreases in thickness toward the tip of the ski by the existence of an upwardly forwardly inclined bottom surface.

4. A ski binding according to claim **3,** wherein the ski plate is of substantially constant thickness over its major portion and includes a rear portion tapering toward the rear end of the ski as viewed in plan view.

5. A safety ski binding according to claim **4,** wherein the anti-friction means are arranged between the tapering front portion of the ski plate and the boot sole.

6. A safety ski binding according to claim **5,** wherein said anti-friction means is substantially sealed along its entire circumference against dirt and moisture.

7. A safety ski binding which includes a ski plate adapted to be fastened onto the ski, a boot plate means adapted to be fastened to the bottom side of the sole of a ski boot intermediate its heel and toe portion, roller means rotatably secured to the side of the ski plate for cooperation with the boot plate means and lever means pivotally secured to the side of the ski plate rearwardly of the roller means and having forwardly extending boot-plate engaging portions to hold by spring-action the boot plate means onto the surface of the roller means in the engaged position of the ski binding while enabling the boot plate means to ride over the roller means in case of a forward fall with predetermined force, and spring means for resiliently urging the lever means in the engaging position with a predetermined force when the binding is engaged, wherein the ski plate constitutes the sole contact means between the boot and the ski so that the ski can bend upon encountering an obstruction without substantially affecting the clamping action of the binding,

wherein said ski plate is a unitary plate having a front portion tapering toward the tip of the ski,

wherein the front portion of the ski plate which is relatively flat on its upper side, decreases in thickness toward the tip of the ski by the existence of an upwardly forwardly inclined bottom surface,

wherein the ski plate is of substantially constant thickness over its major portion and includes a rear portion tapering toward the rear end of the ski as viewed in plan view,

wherein an anti-friction means is arranged between the tapering front portion of the ski plate and the boot sole,

wherein said anti-friction means is substantially sealed along its entire circumference against dirt and moisture,

wherein said anit-friction means includes an encapsulating member made of resilient material which has its outer ends inverted and extending underneath a washer threadably secured onto the ski plate so that the inner ends of the outer encapsulating member are held in position by the clamping action of the washer, and

wherein said washer has a central hole, a second washer having anti-friction surfaces and of larger diameter than the first-mentioned washer, said second washer also being held fast by said clamping action, the inverted free ends of the outer encapsulating member extending underneath the second washer, and a screw clamping the first and second washers onto the ski plate.

8. A safety ski binding according to claim **7,** comprising a disk having anti-friction surfaces and of larger diameter than said second washer which is interposed between the outer encapsulating member and the second washer.

9. A safety ski binding according to claim **8,** wherein said first washer is of steel and said second washer is of polytetrafluoroethylene material.

10. A safety ski binding according to claim 9, wherein the disk is of polytetrafluoroethylene.

11. A safety ski binding which includes a ski plate adapted to be fastened onto the ski, a boot plate means adapted to be fastened to the bottom side of the sole of a ski boot intermediate its heel and toe portion, roller means rotatably secured to the sides of the ski plate for cooperation with the boot plate means, lever means pivotally secured to the side of the ski plate rearwardly of the roller means and having forward boot plate engaging portions so as to hold by spring action the boot plate means onto the surface of the roller means in the engaged position of the ski binding while enabling the boot plate means to ride over the roller means in case of a forward fall with predetermined force, and spring means for spring urging the lever means into the engaging position of the binding with a predetermined force when the binding is engaged, comprising a yoke-like structure formed in part by rear portions of the lever means and in part, by rearwardly, upwardly extending support portions of the ski plate and constituting a spring-loaded toggle lever means having a dead-center position, said yoke-like structure including means for automatically engaging the safety binding when pivoting the yoke-like structure in one direction beyond the dead-center position and for automatically releasing the binding when pivoting the same in the other direction.

12. A safety ski binding according to claim 11, wherein the rear ends of the lever means are angularly bent upwardly and are interconnected by a transversely extending connecting member pivotally secured thereto.

13. A safety ski binding according to claim 12, wherein the toggle lever means includes a further member extending through the connecting member substantially at right angle thereto and operatively connected by way of a spring means with a further member pivotally secured to the support portions of the ski plate.

14. A safety ski binding according to claim 13, wherein the pivot axis of the pivotal connections of the lever means at the ski plate, the pivotal connection of the transversely extending member with the rear portions of the lever means and the pivotal connection of the further member with the support portions of the ski plate provide the toggle action.

15. A safety ski binding according to the claim 14, comprising means for limiting the movement of the yoke-like structure in the engaging direction of the safety ski binding when no boot is present.

16. A safety ski binding according to claim 15, wherein said limiting means includes a hollow member with a recess and fastened in said transversely extending connecting member, a bolt member extending through a bore provided in said hollow member and having a bolt head larger than said bore but smaller than the recess provided in said hollow member, said bolt being threadably secured in said further member pivotally connected to the support portions of the rear section of the ski plate and a compression spring arranged between said hollow member and said further member.

17. A safety ski binding according to claim 16, wherein said hollow member is threadably secured in said connecting member to enable adjustment of the spring tension.

18. A safety ski binding according to claim 17, comprising a spring plate mounted over said bolt between one end of the spring and said hollow member.

19. A ski binding according to claim 18, wherein said ski plate is a unitary plate having a front portion tapering toward the tip of the ski.

20. A ski binding according to claim 19, wherein the front portion of the ski plate which is relatively flat on its upper side, decreases in thickness toward the tip of the ski by the existence of an upwardly forwardly inclined bottom surface.

21. A ski binding according to claim 20, wherein the ski plate is of substantially constant thickness over its major portion and includes a rear portion tapering toward the rear end of the ski as viewed in plan view.

22. A safety ski binding according to claim 21, comprising 1 a heel support member threadably secured to the upper surface of the ski plate for the auxiliary support of the boot heel on the ski plate.

23. A safety ski binding according to claim 22, wherein wherein, said heel support extends over a substantial part of the width of the ski plate and has a dimension in the longitudinal direction of the ski substantially less than its width, and downwardly extending portions adjoining the top surface on each side thereof in the longitudinal direction of the ski.

24. A safety ski binding according to claim 18, comprising an anti-friction means arranged between the tapering front portion of the ski plate and the boot sole.

25. A safety ski binding according to claim 24, wherein said anti-friction means is substantially sealed along its entire circumference against dirt and moisture.

26. An anti-friction device according to claim 25, wherein said anti-friction means includes an encapsulating member made of resilient material which has its outer ends inverted and extending underneath a washer threadably secured onto the ski plate so that the inner ends of the outer encapsulating member are held in position by the clamping action of the washer.

27. An anti-friction device according to claim 26, wherein said washer has a central hole, a second washer having anti-friction surfaces and of larger diameter than the first-mentioned washer, and second washer also being held fast by said clamping action, the inverted free ends of the outer encapsulating member extending underneath the second washer, and a screw clamping the first and second washers onto the ski plate.

28. A safety ski binding according to claim 27, wherein said first washer is of steel and said second washer is of polytetrafluoroethylene material.

29. A safety ski binding according to claim 28, comprising a disk having anti-friction surfaces and of larger diameter than said second washer which is interposed between the outer encapsulating member and the second washer.

30. A safety ski binding according to claim 29, wherein the disk is of polytetrafluoroethylene material.

31. A safety ski binding according to claim 11, wherein the ski plate constitutes the sole contact means between the boot and the ski so that the ski can bend upon encountering an obstruction without substantially affecting the clamping action of the binding.

32. A safety ski binding according to claim 31, wherein the rear ends of the lever means are angularly bent upwardly and are interconnectd by a transversely

extending connecting member pivotally secured thereto.

33. A safety ski binding according to claim **32,** wherein said limiting means includes a hollow member with a recess and fastened in said transversely extending connecting member, a bolt member extending through a bore provided in said hollow member and having a bolt head larger than said bore but smaller than the recess provided in said hollow member, said bolt being threadably secured in said further member pivotally connected to the support portions of the rear section of the ski plate and a compression spring arranged between said hollow member and said further member.

34. A safety ski binding according to claim **33,** wherein said hollow member is threadably secured in said connecting member to enable adjustment of the spring tension.

35. A safety ski binding according to claim **1,** wherein said holding means includes a threaded member extending through openings provided in said first and second washer means.

36. A device according to claim **35,** wherein said holding means further includes an outer encapsulating means of resilient material which has its peripheral edge portions folded over and tucked under the second washer means to thereby provide moisutre and dirtproof assembly by the sealing action of the resilient material of the encapsulating means in conjunction with the clamping action of the tightened threaded member.

* * * * *