United States Patent [19]

Holloway

[11] 3,805,226

[45] Apr. 16, 1974

[54] **OMNIDIRECTIONAL HIGH SENSITIVITY HYDROPHONE**

[75] Inventor: **Jack W. Holloway**, Chula Vista, Calif.

[73] Assignee: **The United States of America as represented by the Secretary of the Army**, Washington, D.C.

[22] Filed: **Feb. 16, 1971**

[21] Appl. No.: **115,427**

[52] U.S. Cl. ..... **340/10**, 340/13 R

[51] Int. Cl. **H04b 13/00**

[58] Field of Search 340/8, 10, 12, 13

[56] **References Cited**

UNITED STATES PATENTS

3,221,296	11/1965	Milne	340/10
3,230,504	1/1966	Horan et al.	340/10
3,328,752	6/1967	Sims	340/8 LF
2,417,830	3/1947	Keller	340/8 LF
3,564,491	2/1971	Granfords et al.	340/10
2,966,656	12/1960	Bigbie et al.	340/10

Primary Examiner—Benjamin A. Borchelt
Assistant Examiner—Harold Tudor
Attorney, Agent, or Firm—Richard S. Sciascia; Ervin F. Johnson; Thomas G. Keough

[57] **ABSTRACT**

A spherical-shell transducer, formed of two hemispherical shells bonded together, has inner and outer metal films radially aligned in quadrature to define eight discrete sections sensitive to impinging, acoustic energy to generate representative signals. Connecting the sections in series and encasing them in a viscous, dielectric substance, contained in a shielded, flexible boot, provides a broadband, highly sensitive hydrophone. Filling the spherical shell with the viscous dielectric and including a vent allowing a fluid communication between its interior and exterior render the hydrophone insensitive to ambient pressure variations. A preamplifier, optionally included, ensures the transfer of the representative signals to remote circuitry via an interconnected coaxial cable.

7 Claims, 5 Drawing Figures

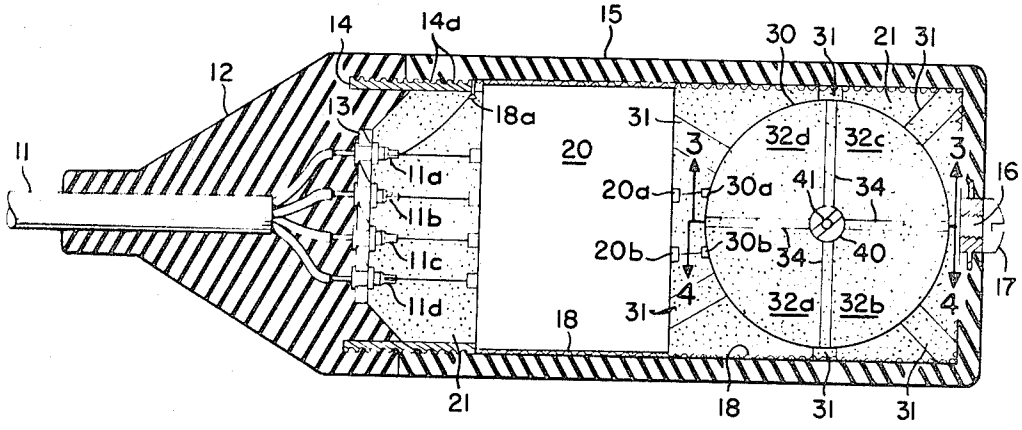

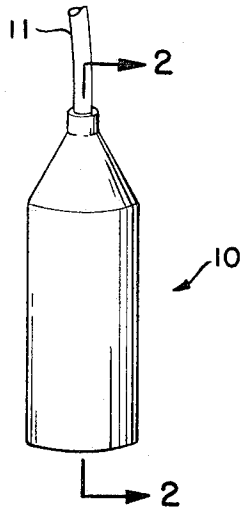

FIG. 1

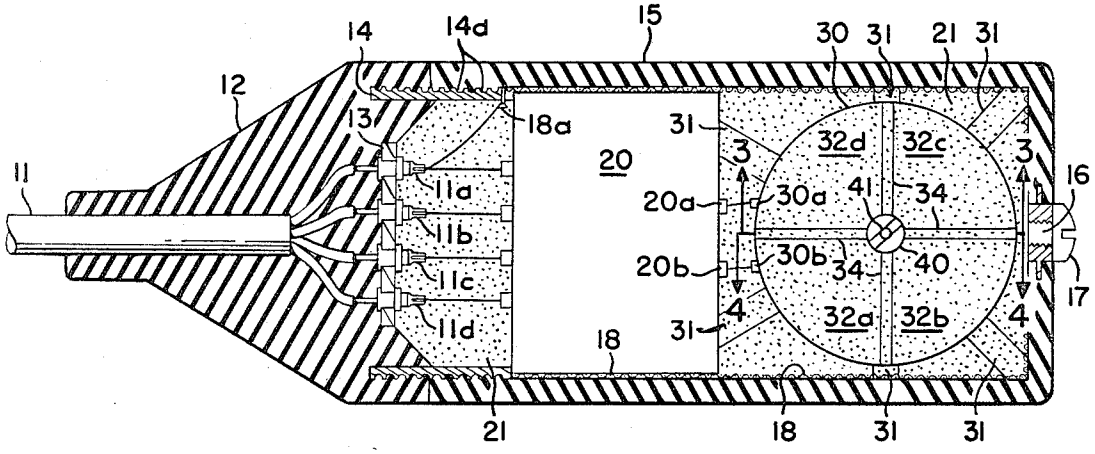

FIG. 2

INVENTOR.
JACK W. HOLLOWAY

BY
THOMAS GLENN KEOUGH
ERVIN F. JOHNSTON
ATTORNEYS

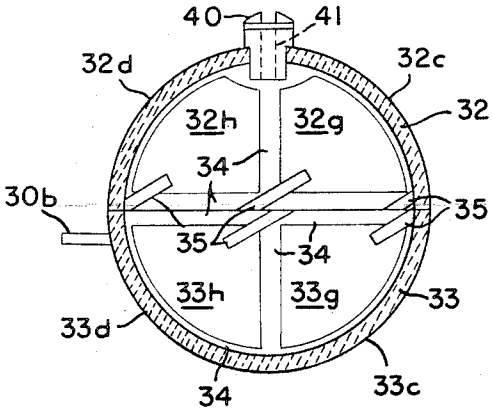

FIG. 3

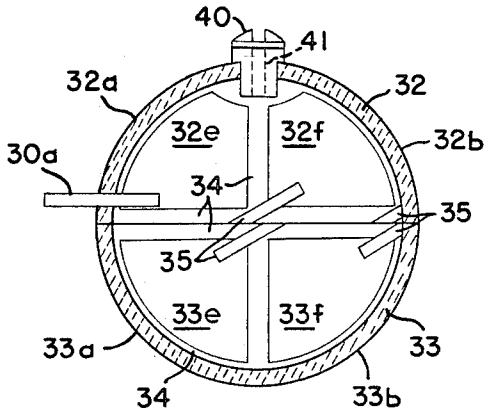

FIG. 4

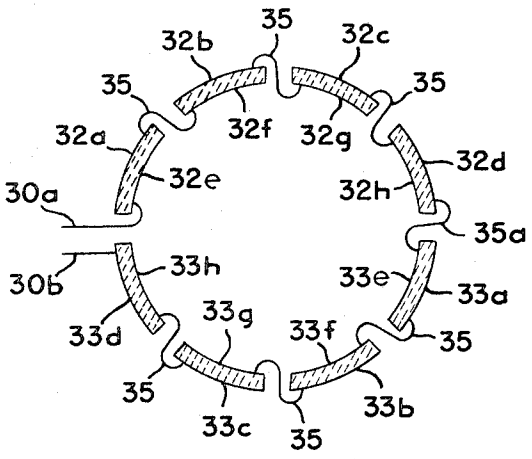

FIG. 5

INVENTOR.
JACK W. HOLLOWAY

BY
THOMAS GLENN KEOUGH
ERVIN F. JOHNSTON
ATTORNEYS

OMNIDIRECTIONAL HIGH SENSITIVITY HYDROPHONE

STATEMENT OF GOVERNMENT INTEREST

The invention described herein may be manufactured and used by or for the Government of the United States of America for governmental purposes without the payment of any royalties thereon or therefor.

BACKGROUND OF THE INVENTION

Hydrophones for monitoring ambient, marine, acoustic patterns must have the capability of being deployed at widely varying depths to reliably, acoustically portray what has been monitored. At extreme depths, those approaching 20,000 feet where ambient pressures of nearly 10,000 psi are encountered, air filled transducers are virtually useless since the sealing arrangements collectively failed. While certain oil-filled hydrophones hold up under the severe surrounding pressures, their asymmetrical configuration gives rise to internal, cross-coupling modes and the creation of nonuniform, directional listening beam patterns. Orienting these asymmetrically-shaped hydrophones differently on successive occasions provides inconsistent and erroneous acoustic images of the same area. All the conventional hydrophones fail to provide a substantially linear response over a 10 kilohertz bandwidth. One notable attempt to eliminate the above enumerated difficulties called for including a spherical, shell-shaped, piezoelectric element having its internal and external surfaces coated with a metallic conductor. Tangentially polarizing the spherical shell, and joining conductors to the internal and external surfaces did give it an omnidirectional capability and a linear response over the 10 kilohertz bandwidth. However, the sensitivity of this element left much to be desired and was totally inadequate for monitoring the weak, ambient, acoustic patterns.

SUMMARY OF THE INVENTION

The present invention is directed to providing a hydrophone having a spherically-shaped shell of material responsive to impinging, acoustic energy to provide representative signals. A plurality of discrete, metallic-film-coated areas, electrically insulated from one another on the internal surface of the spherically shaped shell is opposed by a plurality of radially aligned, metallic films disposed on the external surface of the spherically shaped shell. A plurality of conductors, reaching between adjacent metal films on the outside of the shell to adjacent metal-film areas on the inside of the shell, electrically connects, in series, the sandwiched area of the spherical shell creating a hydrophone highly sensitive to impinging, acoustic energy.

Therefore, a prime object of the invention is to provide a sensitive, omnidirectional hydrophone.

A further object of the invention is to provide a hydrophone insensitive to changing ambient pressures.

Yet another object is to provide a hydrophone insensitive to spurious, electrical, electromagnetic energy.

Still another object is to provide a hydrophone capable of presenting substantially identical operational characteristics when operating under extreme pressure variations.

These and other objects of the invention will become more readily apparent from the drawings when taken with the ensuing specification.

BRIEF DESCRIPTION OF THE DRAWINGS

FIG. 1 is an isometric view of the invention operationally deployed.

FIG. 2 is a cross-sectional view of the invention generally taken along lines 2—2 in FIG. 1.

FIG. 3 is a sectional view of the piezoelectric, spherical shell generally taken along lines 3—3 in FIG. 2.

FIG. 4 is a sectional view of the piezoelectric, spherical shell generally taken along lines 4—4 in FIG. 2.

FIG. 5 is a schematic representation of the electrical interconnection between sections of the spherical shell.

DESCRIPTION OF THE PREFERRED EMBODIMENT

Referring now to the drawings, an improved hydrophone **10** is suspended and operationally deployed in a water medium by a coaxial cable **11** reaching to remotely disposed, responsive circuitry. The cable terminates in a cone-shaped, rubber fitting **12** molded about and secured to the cable's end in a sealed relationship, and cable leads extend through the rubber fitting and form cable terminal points **11***a*, **11***b*, **11***c*, and **11***d*. A terminal board **13** is included to support the terminal points for electrical interconnection to following circuitry.

A metal sleeve **14** is molded into the rubber fitting and is shaped with a plurality of circumferentially running grooves **14**a which aid in holding the metal sleeve in the rubber fitting. An axially aligned boot **15** formed of rubber, or a similar flexible material, is elastically fitted onto the metal sleeve and, when a bonding agent is included between them, a sealed interconnection is set up between the two elements.

At its opposite end, the rubber boot is provided with an access port **16** normally sealed closed by a sealed combination fitting **17** consisting of a tapped wall member receiving a correspondingly shaped, slotted plug. The slotted plug is removable to permit the passage of a fluid described below.

A copper-mesh sheath **18** is bonded on the boot's inner surfaces along its complete internal reaches and is of a relatively lightweight gauge to avoid damping or blocking the transmission of impinging, acoustic energy as it passes through the rubber boot. However, the mesh is sufficiently constructed to afford some degree of physical protection of the components contained within the boot while electrically shielding them from spurious, ambient, electromagnetic signals which foreseeably would produce false information signals. Interconnection to the coaxial cable's shield, or common lead, at terminal point **11***a*, via the sheath's terminal **18***a*, effectively grounds-out the unwanted signals.

For the magnitudes of the signals involved and the relatively linear response desired between 10 hertz and 10 K hertz, a preamplifier **20** was selected, a commercially available model 240B-2, manufactured by Marine Resources, Incorporated, Electromarine Sciences Division, located at 8762 Amigo Avenue in North Ridge, Calif. Its gain was found to be ± 1 db. at the 1 kilohertz, and at the 10 hertz points and had an extreme variation between 10 hertz and 15 kilohertz, within ± 2 db. Increasingly satisfactory operation of the

improved hydrophone was ensured when it was noted that the gain stability of the selected preamplifier was within ± 1 db. over a temperature ranging from 32°F. to 80°F., and an ambient pressure range of between 0 to 10,000 psi.

This preamplifier, disposed within the flexible rubber boot, is electrically joined to the terminal board by a pair of balanced outputs reaching to terminal points 11*b* and 11*c*, as well as by a biasing connection reaching to the biasing terminal point 11*d*. Stable operation is further ensured by having the preamplifier sharing the common terminal 11*a* with the interconnection to sheath terminal 18*a*.

Via leads reaching from a pair of amplifier input points 20*a* and 20*b*, the preamplifier and cable are placed in electrical communication with a spherical-shell transducer 30 having its own pair of outwardly reaching output terminals 30*a* and 30*b* joined to the leads. The only other physical points of connection of the spherical-shell transducer to any of the aforedescribed structure are through a plurality of soft, acoustically decoupling, resilient spacers 31 bonded onto the outer shell of the transducer and the inner surface of the rubber boot. The resilient spacers hold the spherical-shell transducer away from the walls of the rubber boot and the preamplifier to prevent the self-generation of error signals should the hydrophone be accidentally bumped or jarred. Although there are shown only resilient spacers in one plane, it is obvious that all-around acoustic decoupling of the spherical-shell transducer from the rubber boot calls for there being additional resilient spacers reaching out in other planes.

Thusly arranged, the plug is removed from sealed combination fitting 17 and the entire interior of the rubber boot is filled with a viscous, delectric substance 21, such as oil, to remove all voids. Prior to its being placed in the hydrophone, the interior of the spherical-shell transducer also is filled with the viscous dielectric. After replacing the plug in the sealed combination fitting, ambient pressure variations have little, if any, effect on the hydrophone since its interior is filled completely with solid components and the noncompressible viscous dielectric.

The spherical-shell transducer is fabricated from a pair of commercially available hemispherical shells 32 and 33. In the present example, the shells are a molded lead-zirconate-titanate compound, having a composition marketed under the standard designation "Type PZT–4." For the particular application in hand, shells having a one-eighth inch thickness and a two and one-tenth inch outer diameter are internally and externally uniformly coated with a silver metalic film, it being fired-on to ensure a uniform distribution over the hemispherical shells. The shells are radially polarized, according to well known techniques, and when they are deformed by, for example, impinging acoustic energy, a representative signal is created across the two metal films.

Noting FIG. 3 and FIG. 4 to achieve the desired degree of sensitivity, the two hemispherical shells are modified by removing strips of the deposited film to create insulator strips 34 dividing separate electrically conductive surfaces 32*a*, 32*b*, 32*c*, and 32*d* on the outer surface of hemispherical shell 32, and electrically conductive surfaces 32*e*, 32*f*, 32*g*, and 32*h* on its internal surface. Similarly, hemispherical shell 33 has its internal and external conductive surfaces separated by insulator strips 34 to define electrically conductive surfaces 33*a*, 33*b*, 33*c*, and 33*d*, and electrically-conductive surfaces 33*e*, 33*f*, 33*g*, and 33*h*, internally and externally. Greater sensitivity is ensured by serially connecting an outer electrically conductive surface to its neighboring inner conductive surface using individual conductor leaves 35, reaching across insulator strips vacant of the metal film.

By serially connecting all the conductive surfaces in this manner, a plurality of serially connected transducer sections is created which feed their additive portions of signals representing impinging, acoustic energy to preamplifier 20. Since there is danger of between arcing or destroying adjacently disposed sections of a piezoelectric hemispherical shell if adjacent sections are oppositely polarized, the orientation of the conductor leaves permits serial interconnection and a transducer of increased sensitivity.

Looking, in particular, to FIG. 5 showing the schematical representation of the electrical interconnection, the sections of hemispherical shell 32 are serially connected by conductive surfaces 32*a* through 32*h*, joined by a separate conductor leaf 35 reaching between adjacent, outer conductive surfaces and inner conductive surfaces.

Identically, conductor leaves 35 join conductive surfaces 33*a* through 33*h* to serially connect the sections of hemispherical shell 33 and the sections of both hemispherical shells are connected in series by a single traversing conductor leaf 35*a*.

After the conductor leaves have been connected, as disclosed, the hemispherical shells are bonded together by a bonding agent having substantially the same strength, mass, etc., as the shell material. A satisfactory bonding agent having the desired characteristics is marketed under the trademark "EPON VI" by the Epoxy Hysol Division, Dexter Corporation, Pittsburg, Calif. 94565.

The bonding agent is layered to a thickness of approximately 1½ mills and, in addition to holding the hemispherical shell together, electrically insulates the conductive surfaces and conductor leaves from unwanted connections.

From this manner of mechanical and electrical connection, cross-coupling of dissimilarly-shaped transducer sections is eliminated since the aforedescribed spherical shell presents an identical acoustic energy receiving face in all directions. If a source of distant acoustic energy ensonifies the present invention at any direction from an identical range, the signals generated across the several sections, receiving the energy additively, produce a composite representative signal across transducer output terminals 30*a* and 30*b*.

A Helmholtz resonator unit 40 is mounted in the spherical shell to provide a dual function for improved hydrophone operations, those being, to provide an orifice 41 for allowing pressure equalization when the hydrophone is used at varying depths and, to provide a low frequency cutoff at 10 hertz. The particular resonator employed is dimensioned with respect to orifice diameter and overall length to achieve the 10 hertz cutoff and follows established Helmholtz resonator theory set out in the publications, "Fundamentals of Acoustics" by L. E. Kinsler and A. R. Frey, Chapt. 8, John Wiley & Sons, New York, 1950; or "Vibration and

Sound", 2nd Ed. by P. M. Morse, McGraw-Hill, N. Y., 1948.

The resonator is inserted through a hole bored in hemispherical shell 32 and is bonded in place by the bonding agent to preserve the integral nature of the spherical-shell transducer.

All the components exposed to the water medium are corrosion resistant and since the metal films and conductor are encased in the viscous dielectric, the entire hydrophone is immune from the adverse effects of the hostile marine environment.

The incompressible nature of the viscous dielectric filling the boot and spherical-shell transducer provides a pressure nonresponsive capability.

Obviously, many modifications and variations of the present invention are possible in the light of the above teachings, and, it is therefore understood that within the scope of the disclosed inventive concept, the invention may be practiced otherwise than as specifically described.

What is claimed is:

1. A hydrophone comprising:

a pair of hemispherically shaped shells responsive to impinging acoustic energy to provide representative signals being bonded together to assume the configuration of a spherical shell;

a plurality of inner conductive means carried on the inner surface of each of said hemispherically shaped shells electrically insulated from one another;

a plurality of outer conductive means carried on the outer surface of each of said hemispherically shaped shells electrically insulated from one another and each radially aligned with a discrete said inner conductive means to sandwich discrete sections of said pair of hemispherically shaped shells therebetween, and

conductor means joining separate said inner conductive means to adjacent said outer conductive means to connect said sections of said pair of hemispherically shaped shells electrically in series ensuring uniform omnidirectional sensitivity to said impinging acoustic energy.

2. A hydrophone according to claim 1 further including:

a flexible boot encasing said spherical shell;

a viscous dielectric substance filling said flexible boot and the interior of said spherical shell for transmitting said impinging acoustic energy thereto, said spherical shell is additionally provided with a means permitting a fluid communication between its interior and the interior of said flexible boot rendering said hydrophone insensitive to ambient pressure variations; and

a metallic mesh sheath bonded onto and into said flexible boot for shielding said spherical shell from ambient electromagnetic interference.

3. A hydrophone according to claim 2 further including:

a preamplifier disposed in said flexible boot connected to said conductor means for amplifying and passing said representative signals to remote circuitry.

4. A hydrophone according to claim 3 further including:

a plurality of elastomers resiliently positioning said spherical shell in a spaced relationship from said flexible boot and said preamplifier preventing contact therebetween and the resultant generation of false signals.

5. A hydrophone according to claim 4 further including:

a coaxial cable reaching into said flexible boot connected to receive said representative signals and to pass them to remote circuitry.

6. A hydrophone according to claim 5 in which said inner conductive means and said outer conductive means are metal films deposited on the inner and outer surfaces of said pair of hemispherical shells.

7. A hydrophone according to claim 6 in which the inner conductive metal films define quadrature areas on each hemispherical shell and the outer conductive metal films define aligned quadrature areas creating eight said sections for serial interconnection creating increased omnidirectional sensitivity.

* * * * *