(12) INTERNATIONAL APPLICATION PUBLISHED UNDER THE PATENT COOPERATION TREATY (PCT)

(19) World Intellectual Property Organization
International Bureau

(43) International Publication Date
14 July 2016 (14.07.2016)

WIPO | PCT

(10) International Publication Number
WO 2016/112234 A1

(51) International Patent Classification:
*C03B 5/225* (2006.01) *C03B 5/193* (2006.01)
*C03B 5/185* (2006.01) *H05H 1/24* (2006.01)

(21) International Application Number:
PCT/US2016/012557

(22) International Filing Date:
8 January 2016 (08.01.2016)

(25) Filing Language: English

(26) Publication Language: English

(30) Priority Data:
14/592,452 8 January 2015 (08.01.2015) US

(71) Applicant: **CORNING INCORPORATED** [US/US]; 1 Riverfront Plaza, Corning, New York 14831 (US).

(72) Inventors: **BOUGHTON, Daniel Robert**; 12 Vine St., Naples, New York 14512 (US). **JARVIS, Scott Michael**; 111 Harvey Hill Road, Ithaca, New York 14850 (US).

(74) Agent: **BARRON, Jason A.**; Corning Incorporated, Intellectual Property Department, SP-Ti-03-01, Corning, New York 14831 (US).

(81) Designated States *(unless otherwise indicated, for every kind of national protection available)*: AE, AG, AL, AM, AO, AT, AU, AZ, BA, BB, BG, BH, BN, BR, BW, BY, BZ, CA, CH, CL, CN, CO, CR, CU, CZ, DE, DK, DM, DO, DZ, EC, EE, EG, ES, FI, GB, GD, GE, GH, GM, GT, HN, HR, HU, ID, IL, IN, IR, IS, JP, KE, KG, KN, KP, KR, KZ, LA, LC, LK, LR, LS, LU, LY, MA, MD, ME, MG, MK, MN, MW, MX, MY, MZ, NA, NG, NI, NO, NZ, OM, PA, PE, PG, PH, PL, PT, QA, RO, RS, RU, RW, SA, SC, SD, SE, SG, SK, SL, SM, ST, SV, SY, TH, TJ, TM, TN, TR, TT, TZ, UA, UG, US, UZ, VC, VN, ZA, ZM, ZW.

(84) Designated States *(unless otherwise indicated, for every kind of regional protection available)*: ARIPO (BW, GH, GM, KE, LR, LS, MW, MZ, NA, RW, SD, SL, ST, SZ, TZ, UG, ZM, ZW), Eurasian (AM, AZ, BY, KG, KZ, RU, TJ, TM), European (AL, AT, BE, BG, CH, CY, CZ, DE, DK, EE, ES, FI, FR, GB, GR, HR, HU, IE, IS, IT, LT, LU, LV, MC, MK, MT, NL, NO, PL, PT, RO, RS, SE, SI, SK, SM, TR), OAPI (BF, BJ, CF, CG, CI, CM, GA, GN, GQ, GW, KM, ML, MR, NE, SN, TD, TG).

**Published**:

— *with international search report (Art. 21(3))*

(54) **Title**: METHOD AND APPARATUS FOR ADDING THERMAL ENERGY TO A GLASS MELT

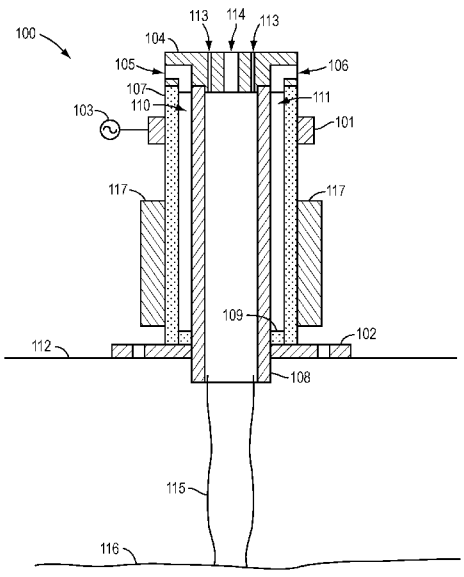


FIG. 1

(57) **Abstract**: Disclosed herein are methods and apparatuses for adding thermal energy to a glass melt. Apparatuses for generating a thermal plasma disclosed herein comprise an electrode, a grounded electrode, a dielectric plasma confinement vessel extending between the two electrodes, and a magnetic field generator extending around the dielectric plasma confinement vessel. Also disclosed herein are methods for fining molten glass comprising generating a thermal plasma using the apparatuses disclosed herein and contacting the molten glass with the thermal plasma. Glass structures produced according to these methods are also disclosed herein.

WO 2016/112234 A1

# METHOD AND APPARATUS FOR ADDING THERMAL ENERGY TO A GLASS MELT

**[0001]** This application claims the benefit of priority under 35 U.S.C. § 120 of U.S. Application Serial No. 14/592452 filed on January 8, 2015 the content of which is relied upon and incorporated herein by reference in its entirety.

## FIELD OF THE DISCLOSURE

**[0002]** The present disclosure relates generally to methods and apparatuses for processing glass batch materials, and more particularly to methods and apparatuses for adding thermal energy to a glass melt using RF plasma during a fining process.

## BACKGROUND

**[0003]** Glass substrates may be used in a variety of applications, ranging from windows to high-performance display devices. The quality requirements for glass substrates have become more stringent as the demand for improved resolution, clarity, and performance increases. Glass quality may, however, be negatively impacted by various processing steps, from forming the glass melt to final packaging of the glass product. In particular, glass sheets may be rendered unsuitable for use by the presence of bubbles and, in some cases, even a single bubble in the glass sheet.

**[0004]** During the melting process, glass precursor batch materials are mixed together and heated in a melter. The batch materials melt and react, giving off reaction gases, which produce bubbles in the molten glass. The molten glass then undergoes a fining step to remove gas bubbles trapped in the melt. However, such fining steps often require long processing times, high energy expenditure, and/or increased expense, as the reaction gases have a long distance to travel to escape the glass melt. To promote the escape of bubbles from the glass melt, fining is often carried out using long tubes (e.g., several meters long) constructed from materials such as platinum, which can have a considerably large footprint and expense.

**[0005]** In addition to consuming space, energy, and/or capital, current fining processes can also limit the glass compositions that can be effectively melted and fined. For example, to drive the escape of bubbles from the glass melt, fining temperatures at least about 50°C, and sometimes at least about 100°C, in excess of the melting temperature are often used. Thus, upper limits on the attainable fining temperature can impose limitations on glass compositions with higher glass transition temperatures, such as temperatures in excess of about 1600°C or more.

**[0006]** Fining can promote bubble removal via two processes. Stokes fining occurs when an increase in the glass temperature leads to a lower viscosity of the glass melt. Bubbles can then rise more rapidly through the less viscous glass melt. Chemical fining occurs when an increase in the glass temperature chemically reduces a chemical fining agent such as tin, thus releasing oxygen into the glass, which can then be incorporated into the bubbles. As the bubbles take up excess oxygen they increase in size and rise through the glass melt more easily, sometimes merging with other bubbles and/or collapsing. Fining agents can include tin, arsenic, and antimony, to name a few. Arsenic and antimony are stronger fining agents but may pose safety and environmental hazards and, thus, are less frequently used. Tin oxide is relatively safer, but also has relatively weaker fining power. Moreover, the amount of tin that can be incorporated as a fining agent into the glass batch materials is often limited because elevated levels of tin can lead to the formation of secondary crystals during downstream processing (e.g., on the forming body or isopipe).

**[0007]** Various methods for promoting fining have thus been investigated by Applicant, such as vacuum fining, centrifugal fining, and reabsorption of bubbles via deep melt pools. However, these methods still suffer from one or more drawbacks including high cost and/or reduced effectiveness at higher fining temperatures. Hot spot fining, or the production of local zones of increased temperatures within the flowing glass stream, has also been investigated by Applicant. Hot spot fining can be achieved, for example, using traditional burners, microwaves, ultrasound, etc. Microwave and ultrasonic fining may provide a cost advantage over traditional fining

processes but can suffer from poor penetration depths and/or can be impractical to implement. Traditional burners using flame combustion to create hot spots can also have one or more disadvantages, such as the inability to precisely control the temperature of the hot spots. If the flame is not hot enough, a hot spot will not be generated and thus will not drive and/or enhance fining. If the flame is too hot, or if the center of the hotspot is too hot, volatilization of less stable oxides in the melt (e.g., boron) may occur, thus negatively impacting the composition of the final product.

**[0008]** Accordingly, it would be advantageous to provide glass fining processes which have higher throughput and/or lower cost, while also minimizing issues relating to glass quality, such as defects caused by bubbles in the melt. It would also be advantageous to provide glass fining processes and apparatuses suitable for melting specialty glass materials, such as glasses with higher glass transition temperatures.

## SUMMARY

**[0009]** The disclosure relates, in various embodiments, to apparatuses for generating a thermal plasma, the apparatuses comprising an electrode, a grounded electrode, a dielectric plasma confinement vessel extending between the electrode and the grounded electrode, a magnetic field generator extending around the dielectric plasma confinement vessel, an inlet for delivering a gas into the dielectric plasma confinement vessel, an RF current source coupled to the electrode and the grounded electrode for converting the gas into a thermal plasma, and an outlet for delivering the thermal plasma. Systems for fining molten glass comprising such apparatuses are also disclosed herein. Further disclosed herein are glass structures, such as glass sheets, having a glass transition temperature ($T_g$) greater than about 1650°C and a bubble concentration less than about 0.001 bubbles/pound. The glass structures can comprise at least about 45 wt%, for example from about 45 to about 95 wt%, of alumina and/or silica and less than about

55 wt%, for example from 5 to 55 wt%, of at least one oxide of barium, boron, magnesium, calcium, sodium, strontium, tin, and/or titanium.

**[0010]** Additional features and advantages will be set forth in the detailed description which follows, and in part will be readily apparent to those skilled in the art from that description or recognized by practicing the invention as described herein, including the detailed description which follows, the claims, as well as the appended drawings.

**[0011]** It is to be understood that both the foregoing general description and the following detailed description present various embodiments, and are intended to provide an overview or framework for understanding the nature and character of the invention as it is claimed. The accompanying drawings are included to provide a further understanding, and are incorporated into and constitute a part of this specification. The drawings illustrate various embodiments and together with the description serve to explain the principles and operations of the invention.

## BRIEF DESCRIPTION OF THE DRAWINGS

**[0012]** The following detailed description can be best understood when read in conjunction with the following drawings, where like structures are indicated with like reference numerals and in which:

**[0013]** **FIG. 1** is a cross-sectional view of an apparatus for fining glass batch materials according to one embodiment of the disclosure;

**[0014]** **FIG. 2** depicts an apparatus for fining glass batch materials according to various embodiments of the disclosure; and

**[0015]** **FIGS. 3A-B** are cross-sectional views of systems for fining glass batch materials according to various embodiments of the disclosure.

## DETAILED DESCRIPTION

### *Apparatuses*

**[0016]** Disclosed herein are apparatuses for generating a thermal plasma, the apparatuses comprising an electrode, a grounded electrode, a dielectric plasma

confinement vessel extending between the electrode and the grounded electrode, a magnetic field generator extending around the dielectric plasma confinement vessel, an inlet for delivering a gas into the dielectric plasma confinement vessel, an RF current source coupled to the electrode and the grounded electrode for converting the gas into a thermal plasma, and an outlet for delivering the thermal plasma.

**[0017]** As used herein, the terms “thermal plasma,” “atmospheric thermal plasma,” and variations thereof are intended to denote a gas such as a noble gas (e.g., argon) that passes through an incident high frequency electric field. Encountering the electromagnetic field produces ionization of the gas atoms and frees electrons which are accelerated to a high velocity and, thus, a high kinetic energy. Some of the high velocity electrons ionize other atoms by colliding with their outermost electrons and those freed electrons can in turn produce additional ionization, resulting in a cascading ionization effect. The plasma thus produced can flow in a stream and the energetic particles caught in this stream are projected toward and strike an object to be heated, thereby transferring their kinetic energy to the object (e.g., molten glass, etc.).

**[0018]** **FIG. 1** illustrates a cross-sectional view of an exemplary apparatus **100** operable for carrying out a method according to embodiments of the present disclosure. In the illustrated embodiment, a thermal ring coupled plasma jet apparatus **100** is mounted on a wall of a fining tube **112**. The apparatus comprises an electrode **101**, a grounded electrode **102**, and a dielectric plasma confinement vessel (or tube) **108** extending between the two electrodes. A magnetic field generator **117** extends around the confinement vessel **108** to induce a cyclonic flow of electrons around the magnetic field lines produced by the apparatus. Gas, e.g., noble gas, can be delivered to the plasma confinement vessel **108** via an inlet **104**, and can exit the confinement vessel **108** as a plasma plume **115**.

**[0019]** According to various embodiments, the electrode (or first electrode) **101** can be a ring comprising one or more metals or metal alloys. For instance, the electrode can comprise silver, copper, or other suitable metals with low resistivity such as aluminum, platinum, and gold, and combinations thereof. Materials with

lower resistance can be advantageous, as higher resistance produces more heat and lowers the heat transfer (Q), which may lead to increased power loss. The thickness of the ring may also vary depending on various processing parameters. In some instances, it can be advantageous to employ a thicker ring, because the extra material can lower the overall resistivity and thus improve the efficiency of the RF current conduction. In one non-limiting embodiment, the electrode **101** is a silver-plated copper ring with a thickness ranging from about 1 cm to about 3 cm, such as about 2 cm. The electrode may be optionally cooled using water or any other suitable fluid, depending on the applied power and/or proximity of the electrode to the fining vessel.

**[0020]** The grounded electrode (or second electrode) **102** can also be a ring comprising one or more metals or metal alloys as disclosed above, for example, platinum, and may have a thickness as set forth above, e.g., from about 1 cm to about 3 cm, or about 2 cm. In certain embodiments, the grounded electrode **102** can comprise a mounting flange through which the plasma plume can exit. The grounded electrode may be optionally cooled using water or any other suitable fluid, depending on the applied power and/or proximity of the electrode to the fining vessel. As opposed to arc plasma jets, which employ internal arc electrodes, the apparatuses disclosed herein can employ external electrodes that are not in physical contact with the plasma plume. Such a configuration may avoid contamination of the glass melt due to vaporization of electrode material.

**[0021]** The RF field can be set up between the two electrodes **101** and **102** using an RF current source **103**, which can generally comprise an RF generator (not shown) and RF matchwork (not shown). In some embodiments, the RF current can have a frequency ranging from about 3 MHz to about 100 MHz, such as from about 5 MHz to about 90 MHz, from about 10 MHz to about 80 MHz, from about 20 MHz to about 70 MHz, from about 30 MHz to about 60 MHz, or from about 40 MHz to about 50 MHz, including all ranges and subranges therebetween. For instance, exemplary RF frequencies include 6.78 MHz, 13.56 MHz, 27.12 MHz, and 40.68 MHz. The RF current source **103** can operate at a power ranging from about 10 kW to about 100

kW, depending on the volume of the glass melt to be fined, for example, the power can range from about 20 kW to about 90 kW, from about 30 kW to about 80 kW, from about 40 kW to about 70 kW, or from about 50 kW to about 60 kW, including all ranges and subranges therebetween.

**[0022]** A gas can be introduced into the plasma confinement tube **108** via the inlet **104**. The inlet **104** can comprise a flange constructed from metals (e.g., brass), metal alloys (e.g., stainless steel), or ceramic materials. The inlet can comprise a central jet **114** through which the gas flows, and an outer annulus of jets **113**. The outer annulus of jets can comprise any number of smaller jets, for instance, up to 16 jets or more, as desired for a particular application. The downward flow from the annulus of jets **113** may serve to direct the working gas flow towards the center of the plasma confinement tube **108**. According to various embodiments, the gas can be chosen from noble gases, such as helium, neon, argon, krypton, and xenon. The gas flow rate from both the central jet **114** and the annulus of jets **113** can range, for example, from about 1 slpm to about 30 slpm, such as from about 2 slpm to about 28 slpm, from about 5 slpm to about 24 slpm, from about 8 slpm to about 20 slpm, or from about 10 slpm to about 15 slpm, including all ranges and subranges therebetween. In some embodiments, the gas flow rate from the central jet may range from about 1 to about 24 slpm, and the gas flow rate from the annulus of jets may independently range from about 1 to about 24 slpm.

**[0023]** The flange can be cooled using water or any other suitable fluid. A cooling inlet **105** and cooling outlet **106** can be provided and can be connected to a chiller (not shown) to maintain the water or other coolant at a desired temperature, e.g., room temperature. In some instances, it may be advantageous to keep the plasma containment vessel **108** at or above about room temperature, as cooler temperatures may produce condensation on the exterior of the apparatus, which may be undesirable in a glass production environment. The plasma containment vessel **108** may have any shape or dimension and, in certain instances, may be tubular in shape.

**[0024]** A cooling containment vessel (or cooling jacket) **107** may be provided around the plasma confinement vessel **108**, for containing the cooling water or other cooling fluid. Both the containment vessel **107** and the confinement vessel **108** can be constructed from dielectric materials, such as high-temperature ceramic materials, e.g., silicon nitride, high purity alumina, and combinations thereof. The containment vessel **107** can provide spaces **110** and **111** for the circulating coolant to flow around the confinement vessel **108** to cool it evenly. A ring seal **109** can be provided to seal the cooling jacket and keep the spaces **110** and **111** substantially water-tight. The ring seal **109** can also be constructed from ceramic materials and can, in some embodiments, be sealed between the two vessels using, e.g., a thermal epoxy. Optionally, the spaces **110** and **111** may further comprise ceramic rods (not shown) for deflecting water flow evenly around the entire confinement vessel **108**. These rods may improve water circulation and ensure proper cooling of both the lower and upper portions of the plasma confinement vessel.

**[0025]** The magnetic field generator **117** can be placed around the plasma confinement vessel **108** (and the cooling jacket **107**), for instance, concentric with the confinement vessel(s) and can be used to provide a desired plasma flow pattern. For example, the magnet may pinch the plasma inward by causing the ions and electrons to spiral around the magnetic field lines, thus producing a cyclonic flow. Lorentz force due to the presence of both electric and magnetic fields in the plasma confinement vessel **108** can produce an electron cyclotron resonance (ECR) effect, depending on the strength of the magnetic field. ECR may also depend on the electron collision rate, which may in turn depend on other factors such as pressure. The electron collision rate may, for example, be higher at atmospheric pressure due to limited free space (e.g., mean free space on the order of about 68 nm), such that the electrons have limited time to spiral around the magnetic field lines before colliding with other particles. The degree to which the electrons do spiral causes them to pick up additional kinetic energy which they can then transfer to the particle with which they collide, the particle inelastically absorbing the kinetic energy and then becoming captured by the magnetic field lines with an initially higher energy,

subsequently rotating a few times, and then colliding with another particle. In lower pressure plasmas, the mean free space may be larger (e.g., on the order of several cm), such that the electrons may spiral for longer distances without being impeded.

**[0026]** When cyclotron resonance occurs, the electrons may have additional opportunities to collide with ions and neutrals, thereby transferring their kinetic energy (gained from accelerating around the magnetic field lines). The ions and neutrals can absorb this kinetic energy, which is then transformed into heat, causing the ions and neutrals to vibrate more intensely. A neutral may furthermore become ionized due to collision with an electron, which ejects a valence electron out of its orbital and increases the number of free electrons due to the Townsend Effect. The ECR effect can thus serve to dramatically raise the temperature of the plasma to levels sufficient for creating hot spots in the plasma melt.

**[0027]** The magnetic field required to produce ECR depends, for example, on the frequency of the RF current. The required magnetic field strength (B) can be calculated (for non-relativistic speeds) using the following formula:

$$B = \frac{\omega \cdot m}{e}$$

wherein ω is the angular frequency (2π·frequency), m is the rest mass of an electron (9.11 x $10^{-31}$ kg), and e is the elementary charge of the electron (1.602 x $10^{-19}$ C). Thus, to produce ECR at an exemplary frequency of 13.56 MHz, the minimum required magnetic field strength (B) can be calculated as follows:

$$\frac{2\pi\ (13.56\ x\ 10^{6})(9.11\ \mathrm{x}\ 10^{-31}\ \mathrm{kg})}{1.602\ x\ 10^{-19}\ C} = 0.00048\ \frac{kg}{C\cdot s}\ or\ T, Tesla$$

The surrounding magnetic field generator **117** for an apparatus operating at a frequency of 13.56 MHz should therefore have a field strength of at least about 4.8 x $10^{-4}$ T. Of course, it is within the ability of one skilled in the art to calculate the magnetic field strength for other operating frequencies and to choose or modify the magnet accordingly.

**[0028]** According to various embodiments, a solenoid can be used to produce the magnetic field. The field strength can be controlled in the solenoid, for example, by

varying the DC current. In certain embodiments, the solenoid can be cooled with water or any other suitable fluid to maximize efficiency. Of course, other magnetic field generators can be used and are envisioned to fall within the scope of the disclosure.

**[0029]** The apparatus **100** can, in various embodiments, be mounted on the wall of a fining tube **112**. The plasma plume **115** can thus exit the plasma confinement tube **108** and strike the surface of the glass melt **116** within the fining tube. The plasma plume **115** may be envisioned as having a substantially cylindrical or slightly conical shape, with a given length and a circular cross-section. The circular cross-section is defined by the center, or core, and various concentric rings or sheaths. The temperature of the plasma plume may thus be described as a cross-sectional gradient, where the core of the plasma plume can have a temperature of up to about 11,000K and the outer sheath or outer edge of the plasma plume stream may have a relatively lower temperature of at least about 300K. For instance, the core may have a temperature ranging from about 9,000K to about 11,000K and the outer sheath may have a temperature ranging from about 300K to about 1,000K, such as from about 300K to about 500K. Multiple apparatuses **100** can be mounted at various positions along the fining tube to create hot spots in the glass melt as it flows through the fining tube. According to various embodiments, the apparatus can operate at temperatures sufficient to produce hot spots with a local temperature that can reach as high as 2000°C. For example, the apparatus can heat the glass melt to temperatures ranging from about 500°C to about 1900°C, such as from about 800°C to about 1800°C, from about 1000°C to about 1700°C, from about 1200°C to about 1600°C, or from about 1400°C to about 1500°C, including all ranges and subranges therebetween.

**[0030]** **FIG. 2** provides another illustration of an apparatus **100** for carrying out various methods disclosed herein. As in **FIG. 1**, the apparatus comprises an electrode **101**, a grounded electrode **102**, and a dielectric plasma confinement vessel **108** between the two electrodes. Gas **118** enters the confinement vessel **108** by way of the inlet **104** and exits as a plasma plume **115**. The two electrodes are

connected to an RF source **103** that provides a current $\mathbf{i_c}$ between the electrodes. In the first half of a sinusoidal cycle, the electrode **101** is positively charged and the grounded electrode **102** is negatively charged. During operation the grounded electrode **102** stays at ground potential, but the electrode **101** can swing from positive above ground to negative with respect to ground. Magnetic field lines **B** are illustrated as orthogonal to the direction of gas flow and the plasma plume. Electric field lines **E** run from positive to negative charges and can apply force to the outermost electrons in that direction. A second magnetic field is generated by the magnetic field generator (not shown) with field lines running parallel to the direction of gas flow. The magnetic fields can pull the electrons into a circular motion, forming a helical path in the gas that can change direction with the sinusoidal direction change of the RF field.

**[0031]** The apparatus disclosed herein can, in some embodiments, be envisioned as functioning in a manner similar to a dielectric barrier discharge plasma jet, although such apparatuses lack the form and function necessary to produce a thermal plasma as disclosed herein. For example, dielectric barrier discharge devices use much lower frequencies (e.g., less than 500 kHz) and thus produce a non-thermal plasma with a very small plasma volume. Ionization levels are very weak due to low electron density and low temperature. Accordingly, the plasma produced by such plumes is not sufficient in volume or temperature for heating a glass melt to high fining temperatures, particularly in view of the potentially large surface area of the glass melt. In contrast, the apparatuses disclosed herein function at much higher frequencies (e.g., 3 MHz or greater), high power (e.g., 10 kW or greater), and high circulating currents in the plasma (e.g., up to 14 Amps). Moreover, the use of a magnetic field generator to induce ECR raises the temperature of the plasma plume to a level sufficient for driving and/or enhancing glass fining.

**[0032]** As such, apparatuses for generating thermal plasma disclosed herein can be useful in glass fining processes, e.g., for heating the molten glass to higher temperature through electron bombardment instead of flame combustion. This and

other features allows for an apparatus that is flexible, tunable, and less expensive than conventional fining apparatuses. In particular, apparatuses for generating a thermal plasma as disclosed herein can, in some embodiments, be precisely controlled and tuned to a desired temperature, thereby avoiding hot spots that are too cool or too hot and the respective disadvantages associated therewith.

***Methods***

**[0033]** Disclosed herein are methods for fining molten glass, the methods comprising generating a thermal plasma using an apparatus as described herein, introducing molten glass into a fining vessel, and contacting the molten glass with the thermal plasma. According to various embodiments disclosed herein, molten glass batch materials are contacted with and heated by a plasma plume. As used herein, the terms "contact" and "contacted" and variations thereof are intended to denote the physical and/or thermal interaction of the molten glass with the plasma. For instance, the glass may be physically contacted by the plasma and/or the glass may come into thermal contact with the plasma, e.g., the heat produced by the thermal plasma. The molten glass can be directly heated by the plasma or indirectly heated by contact with a material or surface that is heated by the plasma.

**[0034]** It is also to be understood that heating of the molten glass by contact with the thermal plasma may be an overall heating of the molten glass or a localized heating of selected regions of the glass melt (e.g., creation of "hot spots"). Localized heating, as opposed to overall heating, provides heat to one or more predetermined regions, e.g., in the fining vessel, such that the glass travels through discrete zones that are relatively hot and cold with respect to one another, these zones optionally alternating along the length of the finer. **FIGS. 3A-B** depict alternate system configurations for carrying out the methods according to various embodiments disclosed herein. Both **FIGS. 3A-B** depict configurations for localized heating and will be discussed in more detail below.

**[0035]** In **FIG. 3A**, a plurality of plasma torches **300** can be attached or otherwise coupled to a fining vessel **320** and/or can be placed in proximity to the vessel. For

instance, the plasma torches **300** can be positioned just outside the fining vessel, such as within the walls of the refractory sections of the finer. Glass melt **G** flows from the inlet **330** to the outlet **340**, as indicated by the arrows. In the illustrated embodiment, the plasma torches **300** can be pointed at the glass-air interface **350**, creating one or more localized hot spots **360** at the surface which can radiate into the glass melt **G** and locally increase the temperature of the glass. The increased temperature can promote Stokes fining and activate chemical fining in the glass melt, such that bubbles **370** in the glass melt can rise to the surface and/or collapse. Additionally, the plasma plume(s) may introduce convection currents in the glass melt that may disrupt laminar flow of the glass melt and promote mixing in the fining vessel, which can further promote fining and/or reduce the need for mixing downstream. According to various embodiments, the system configuration depicted in **FIG. 3A**, which provides hot spots at the glass-air interface, can be advantageous for shallow fining set ups.

**[0036]** **FIG. 3B** depicts an alternate configuration, in which the plasma torches **300** are positioned below the fining vessel **320**. In the illustrated embodiment, one or more localized hot spots **360** are created below the glass, which may promote Stokes fining as the hot glass rises from the bottom of the finer. The plasma torches are pointed at and impinge on a surface **380** in contact with the glass. The glass melt **G** is then heated via heat transfer **390** from the surface **380**. According to certain embodiments, the system configuration depicted in **FIG. 3B** may provide enhanced fining (e.g., Stokes fining) as compared to the configuration of **FIG. 3A**, but this configuration may be less efficient if the material (surface **380**) upon which the torch impinges does not efficiently transfer heat to the glass melt. Moreover, in this configuration the material that is in contact with the plasma should be selected to withstand heat from the plasma torch without being damaged.

**[0037]** The methods disclosed herein may have various advantages over prior art fining methods. For instance, by using thermal plasma to heat the molten glass, it may be possible to reduce the footprint of the fining equipment (e.g., shorten the length of the fining vessel). The ability to reduce the amount of precious materials

(e.g., Pt) used to construct such fining vessels even by a small fraction can translate into significant capital savings. Alternatively, for pre-existing fining systems and vessels, it may be possible to increase the throughput of molten glass thereby improving efficiency and generating increased revenue. Moreover, the use of targeted, tunable plasma to heat the molten glass may result in reduced wear over the lifetime of the equipment. For example, even a 2% reduction in the amount of platinum oxidation over the period of a year can result in significant cost savings.

**[0038]** Additionally, the methods disclosed herein may be advantageously combined with other glass melting techniques, such as submerged combustion melting (SCM). SCM is a high throughput melting technology with a small footprint and relatively low cost that melts glass by injecting gas-oxy flames directly into the glass melt. SCM has a favorably high melting rate, but has the disadvantage of generating a foamy, wet glass (e.g., up to about 30% void fraction). The use of thermal plasma to fine such a glass melt may be advantageous because it can effectively break up foam in the melt and can generate higher temperatures compatible with the melting temperatures employed for SCM, which may be needed to promote chemical fining. Additionally, fining with thermal plasma is a relatively dry process and, thus, can be used to remove water from the SCM glass melt, which can be advantageous particularly in the case of glass that is to be chemically strengthened by ion exchange in downstream processing steps. Furthermore, the SCM melting equipment may comprise an intermediate chamber connecting the SCM to the fining vessel and this chamber may be easily retrofitted to include a plasma fining apparatus.

***Glass Structures***

**[0039]** The term “glass batch materials” and variations thereof is used herein to denote a mixture of glass precursor particles which, upon melting, react and/or combine to form a glass. The glass batch materials may be prepared and/or mixed by any known method for combining the glass precursor particles. For example, in certain non-limiting embodiments, the glass batch materials may comprise a dry or

substantially dry mixture of glass precursor particles, e.g., without any solvent or liquid. In other embodiments, the glass batch materials may be in the form of a slurry, for example, a mixture of glass precursor particles in the presence of a liquid or solvent.

**[0040]** According to various embodiments, the glass batch materials may comprise glass precursor materials, such as silica, alumina, and various additional oxides, such as barium, boron, magnesium, calcium, sodium, strontium, tin, or titanium oxides. For instance, the glass batch materials may be a mixture of silica and/or alumina with one or more additional oxides. In various embodiments, the glass batch materials comprise from about 45 to about 95 wt% collectively of alumina and/or silica and from about 5 to about 55 wt% collectively of at least one oxide of barium, boron, magnesium, calcium, sodium, strontium, tin, and/or titanium.

**[0041]** Various specialty or "unconventional" glass compositions may present challenges due to extremely high melting points, particularly in view of the tendency to operate the finer at temperatures significantly higher than the melter. For example, glass batch materials comprising a mixture of barium oxide and alumina or a mixture of calcium oxide and alumina may have extremely high melting temperatures, e.g., above 2100°C, which complicates the melting process and makes conventional fining difficult, if not impossible. Ultra-low expansion (ULE®) glasses comprising high levels of silica and low levels of titanium dioxide may also present difficulties when melted and fined using traditional processes.

**[0042]** Specialty glasses may also be produced from batch materials comprising relatively high amounts of alumina, e.g., greater than about 20 wt% of alumina. Specialty glass compositions that may be fined using the methods and apparatuses disclosed herein may include mixtures of alumina and barium oxide, such as mixtures comprising at least about 50 wt% alumina and less than about 50 wt% barium oxide, for example, a mixture comprising from about 50 to about 75 wt% alumina and from about 25 to about 50 wt% barium oxide, or a mixture of about 67 wt% alumina and about 33 wt% barium oxide. Similar mixtures comprising alumina and calcium oxide may also be used as glass batch materials, for instance, a mixture

comprising from about 70 to about 80 wt% alumina and from about 20 to about 30 wt% calcium oxide.

**[0043]** ULE® glasses may comprise high levels of silica, for instance from about 85 to about 95 wt% silica, and from about 5 to about 15 wt % titanium oxide, or greater than about 90 wt% silica and less than about 10 wt% titanium oxide. These ULE® glasses may include hydroxyl groups (-OH) and various additional elements, such as Nb, Ta, F, and Al. For instance, the ULE® glasses may include less than about 5 wt% of such additional elements. In certain embodiments, the ULE® glass may include such elements in an amount ranging from about 0.1 to about 5 wt%, such as from about 0.5 to about 3 wt%, or from about 1 to about 2 wt%.

**[0044]** In certain non-limiting embodiments, the batch materials comprise less than about 55 wt% of at least one oxide of barium, boron, magnesium, calcium, sodium, strontium, tin, and/or titanium, for example, less than about 50 wt%, less than about 45 wt%, less than about 40 wt%, less than about 35 wt%, less than about 30 wt%, less than about 35 wt%, less than about 20 wt%, less than about 15 wt%, less than about 10 wt%, or less than about 5 wt%, relative to the total weight of the glass batch materials, including all ranges and sub-ranges therebetween. Without wishing to be bound by theory, it is believed that glasses low in such modifiers may have higher glass transition temperatures and may thus be more difficult to melt and/or fine using conventional methods.

**[0045]** By way of non-limiting example, the glass batch materials may comprise less than about 55, 50, 45, 40, 35, 30, 25, 20, 15, 10, or 5 wt% of barium oxide, including all ranges and sub-ranges therebetween. The glass batch materials may likewise comprise less than about 55, 50, 45, 40, 35, 30, 25, 20, 15, 10, or 5 wt% of boron oxide, including all ranges and sub-ranges therebetween. Alternatively, the glass batch materials may comprise less than about 55, 50, 45, 40, 35, 30, 25, 20, 15, 10, or 5 wt% of magnesium oxide, including all ranges and sub-ranges therebetween. In other embodiments, the glass batch materials may comprise less than about 55, 50, 45, 40, 35, 30, 25, 20, 15, 10, or 5 wt% of calcium oxide, including all ranges and sub-ranges therebetween. According to further embodiments, the

glass batch materials may comprise less than about 55, 50, 45, 40, 35, 30, 25, 20, 15, 10, or 5 wt% of sodium oxide, including all ranges and sub-ranged therebetween. In yet further embodiments, the glass batch materials may comprise less than about 55, 50, 45, 40, 35, 30, 25, 20, 15, 10, or 5 wt% of strontium oxide, including all ranges and sub-ranges therebetween. In still further embodiments, the glass batch materials may comprise less than about 55, 50, 45, 40, 35, 30, 25, 20, 15, 10, or 5 wt% of tin oxide, including all ranges and sub-ranges therebetween. According to other embodiments, the glass batch materials may comprise less than about 55, 50, 45, 40, 35, 30, 25, 20, 15, 10, or 5 wt% of titanium oxide, including all ranges and sub-ranges therebetween. It is to be understood that various mixtures of oxides described above may be used, with the total amount of the at least one oxide being less than about 55 wt%. By way of non-limiting example, a mixture of sodium and calcium oxides may be used, or a combination of titanium and sodium oxides may be used, or a combination of magnesium, sodium, and calcium oxides may be used, and so forth.

**[0046]** The silica and/or alumina may be present in a combined amount of at least about 45 wt% of the glass batch materials, for instance, at least about 50 wt%, at least about 55 wt%, at least about 60 wt%, at least about 65 wt%, at least about 70 wt%, at least about 75 wt%, at least about 80 wt%, at least about 85 wt%, at least about 90 wt%, or at least about 95 wt%. According to certain embodiments, the glass batch materials may comprise at least about 45, 50, 55, 60, 65, 70, 75, 80, 85, 90, or 95 wt% of silica. In other embodiments, the glass batch materials may comprise at least about 45, 50, 55, 60, 65, 70, 75, 80, 85, 90, or 95 wt% of alumina. It is to be understood that mixtures of silica and alumina in the amounts indicated above may also be used, with the combined amount of silica and alumina being greater than about 45 wt%.

**[0047]** It is also envisioned that additional glass batch compositions which may require elevated melting temperatures and/or which may have other processing difficulties similar to those described above can be used as the glass batch materials processed in the methods described herein. For instance, glass batch compositions

comprising silicon nitride, silicon carbide, zirconia, and other oxides with high melting temperature may be suitable for processing according to the methods described herein. High performance optical glasses, such as EAGLE XG® and Lotus™ XP from Corning Incorporated, may also be processed according to the methods described herein.

**[0048]** The glass batch materials may be prepared by any method known in the art for mixing and/or processing glass batch materials. For instance, the batch materials may be mixed, milled, ground, and/or otherwise processed to produce a desired mixture with a desired size and/or shape. For example, the glass batch materials may have an average particle size of less than about 1,000 microns, for instance, less than about 900, 800, 700, 600, 500, 400, 300, 200, or 100 microns, and all ranges and sub-ranges therebetween. In various embodiments, the glass batch materials can have an average particle size ranging from about 5 microns to about 1,000 microns, such as from about 50 microns to about 900 microns, from about 100 microns to about 800 microns, from about 150 microns to about 700 microns, from about 200 microns to about 600 microns, or from about 250 microns to 500 microns, and all ranges and sub-ranges therebetween. In further embodiments, the average particle size of the glass batch materials may be less than about 100 microns, such as less than about 50 microns, less than about 25 microns, or less than about 10 microns.

**[0049]** The methods and apparatuses described herein provide a means to melt and fine glass batch materials which can then be used to form glass structures. As used herein the term “glass structure” and variations thereof is intended to denote a glass article made by processing molten glass, for instance, any article produced after the fining process. The glass structure is not limited in shape, dimension, composition, or microstructure, and can be any conventional or unconventional article. The glass structure can be, for example, an article that has been cooled, e.g., to room temperature, or can be an article that exists in a molten or semi-molten state. In some embodiments, the glass structure may be a glass sheet, such as that produced by fusion-draw, slot-draw, or float processes. A wide variety of other glass

shapes with varying compositional and physical properties are envisioned and intended to fall within the scope of the disclosure.

**[0050]** According to various embodiments, the methods disclosed herein can make it possible to fine unconventional glass compositions having relatively higher glass transition temperatures ($T_g$), such as greater than about 1650°C, greater than about 1700°C, greater than about 1800°C, greater than about 1900°C, or greater than about 2000°C, including all ranges and subranges therebetween. In other embodiments, it may be possible to fine conventional (and unconventional) glass compositions more effectively than prior art methods, e.g., to produce molten glass and glass structures with less bubbles and/or blisters. For example, typical processes for fining molten glass may produce molten glass or glass structures with a bubble concentration ranging from about 0.001 to about 0.01 bubbles per pound of glass. In contrast, the methods disclosed herein can provide molten glass and glass structures having a bubble concentration at least about an order of magnitude lower, for example, less than about 0.001 bubbles per pound, less than about 0.0009, 0.0008, 0.0007, 0.0006, 0.0005, 0.0004, 0.0003, 0.0002, or 0.0001 bubbles/pound.

**[0051]** It will be appreciated that the various disclosed embodiments may involve particular features, elements or steps that are described in connection with that particular embodiment. It will further be appreciated that a particular feature, element or step, although described in relation to one particular embodiment, may be interchanged or combined with alternate embodiments in various non-illustrated combinations or permutations.

**[0052]** It is to be understood that, as used herein the terms “the,” “a,” or “an,” mean “at least one,” and should not be limited to “only one” unless explicitly indicated to the contrary. Thus, for example, reference to “a torch” includes examples having two or more such “torches” unless the context clearly indicates otherwise.

**[0053]** Ranges can be expressed herein as from “about” one particular value, and/or to “about” another particular value. When such a range is expressed, examples include from the one particular value and/or to the other particular value.

Similarly, when values are expressed as approximations, by use of the antecedent "about," it will be understood that the particular value forms another aspect. It will be further understood that the endpoints of each of the ranges are significant both in relation to the other endpoint, and independently of the other endpoint.

**[0054]** Various ranges are expressed herein as "greater than about" one or more particular values or "less than about" one or more particular values and "all ranges and sub-ranges therebetween." When such ranges are expressed, examples include from any one particular value to any other particular value. For instance, glass batch materials comprising greater than about 45 wt% of alumina, such as greater than about 50, 55, 60, 65, 70, 75, 80, 85, or 90 wt% include ranges of alumina from about 45 wt% to about 90 wt%, from about 65 wt% to about 80 wt%, and all other possible ranges between each disclosed value. Similarly, glass batch materials comprising less than about 55 wt% of at least one oxide, such as less than about 50, 45, 40, 35, 30, 25, 20, 15, or 10 wt% include ranges of oxide from about 10 wt% to about 55 wt%, from about 15 wt% to about 40 wt%, and all other possible ranges between each disclosed value.

**[0055]** All numerical values expressed herein are to be interpreted as including "about," whether or not so stated, unless expressly indicated otherwise. It is further understood, however, that each numerical value recited is precisely contemplated as well, regardless of whether it is expressed as "about" that value. Thus, "a temperature greater than 1000°C" and "a temperature greater than about 1000°C" both include embodiments of "a temperature greater than about 1000°C" as well as "a temperature greater than 1000°C."

**[0056]** Unless otherwise expressly stated, it is in no way intended that any method set forth herein be construed as requiring that its steps be performed in a specific order. Accordingly, where a method claim does not actually recite an order to be followed by its steps or it is not otherwise specifically stated in the claims or descriptions that the steps are to be limited to a specific order, it is no way intended that any particular order be inferred.

**[0057]** While various features, elements or steps of particular embodiments may be disclosed using the transitional phrase “comprising,” it is to be understood that alternative embodiments, including those that may be described using the transitional phrases “consisting” or “consisting essentially of,” are implied. Thus, for example, implied alternative embodiments to an apparatus comprising A + B + C include embodiments where the apparatus consists of A + B + C, and embodiments where the apparatus consists essentially of A + B + C.

**[0058]** It will be apparent to those skilled in the art that various modifications and variations can be made to the present invention without departing from the spirit and scope of the invention. Since modifications combinations, sub-combinations and variations of the disclosed embodiments incorporating the spirit and substance of the invention may occur to persons skilled in the art, the invention should be construed to include everything within the scope of the appended claims and their equivalents.

**WHAT IS CLAIMED IS:**

1. An apparatus for generating a thermal plasma, comprising:
an electrode,
a grounded electrode,
a dielectric plasma confinement vessel extending between the electrode and the grounded electrode,
a magnetic field generator extending around the dielectric plasma confinement vessel,
an inlet for delivering a gas into the dielectric plasma confinement vessel,
an RF current source coupled to the electrode and the grounded electrode for converting the gas into a thermal plasma, and
an outlet for delivering the thermal plasma.

2. The apparatus of claim 1, wherein the electrode and the grounded electrode comprise metal rings.

3. The apparatus of claim 1, wherein the inlet comprises a central jet and a peripheral annulus comprising a plurality of jets.

4. The apparatus of claim 1, wherein the RF current generates electric field lines parallel to a direction of gas flow in the dielectric plasma confinement tube and magnetic field lines orthogonal to the direction of gas flow.

5. The apparatus of claim 1, wherein the magnetic field generator generates magnetic field lines parallel to a direction of gas flow in the dielectric plasma confinement tube.

6. The apparatus of claim 1, wherein the thermal plasma comprises a core region having a first temperature ranging from about 9000K to about 11000K and a

peripheral region having a second temperature ranging from about 300K to about 1000K.

7. The apparatus of claim 1, wherein the RF current has a frequency ranging from about 3 MHz to about 100 MHz.

8. A system for fining molten glass comprising at least one apparatus according to claim 1.

9. The system of claim 8, further comprising a fining vessel containing the molten glass.

10. The system of claim 9, wherein the at least one apparatus is directed at a glass-air interface in the fining vessel.

11. The system of claim 9, wherein the at least one apparatus is directed at an exterior surface of the fining vessel.

12. A method for fining molten glass comprising:

introducing a gas into an apparatus for generating a thermal plasma, the apparatus comprising:

an electrode,

a grounded electrode,

a dielectric plasma confinement vessel extending between the electrode and the grounded electrode,

a magnetic field generator extending around the dielectric plasma confinement vessel,

an inlet for delivering a gas into the dielectric plasma confinement vessel,

an RF current source for converting the gas into a thermal plasma, and

an outlet for delivering the thermal plasma,
introducing molten glass into a fining vessel; and
contacting the molten glass with the thermal plasma.

13. The method of claim 12, wherein the gas is a noble gas chosen from argon, helium, neon, krypton, and xenon.

14. The method of claim 12, wherein contacting the molten glass with the thermal plasma comprises directing the thermal plasma at a glass-air interface in the fining vessel.

15. The method of claim 12, wherein contacting the molten glass with the thermal plasma comprises directing the thermal plasma at an exterior surface of the fining vessel.

16. The method of claim 12, wherein the thermal plasma heats the molten glass to a temperature greater than or equal to about 1700°C.

17. The method of claim 12, wherein the thermal plasma locally heats at least one predetermined region in the fining vessel through which the molten glass flows.

18. A glass structure having a $T_g$ greater than about 1650°C and a bubble concentration of less than 0.001 bubbles/pound.

19. The glass structure of claim 18, comprising from about 45 to about 95 wt% collectively of alumina and/or silica and from about 5 to about 55 wt% collectively of at least one oxide of barium, boron, magnesium, calcium, sodium, strontium, tin, and/or titanium

20. The glass structure of claim 18, wherein the glass structure is a glass sheet.

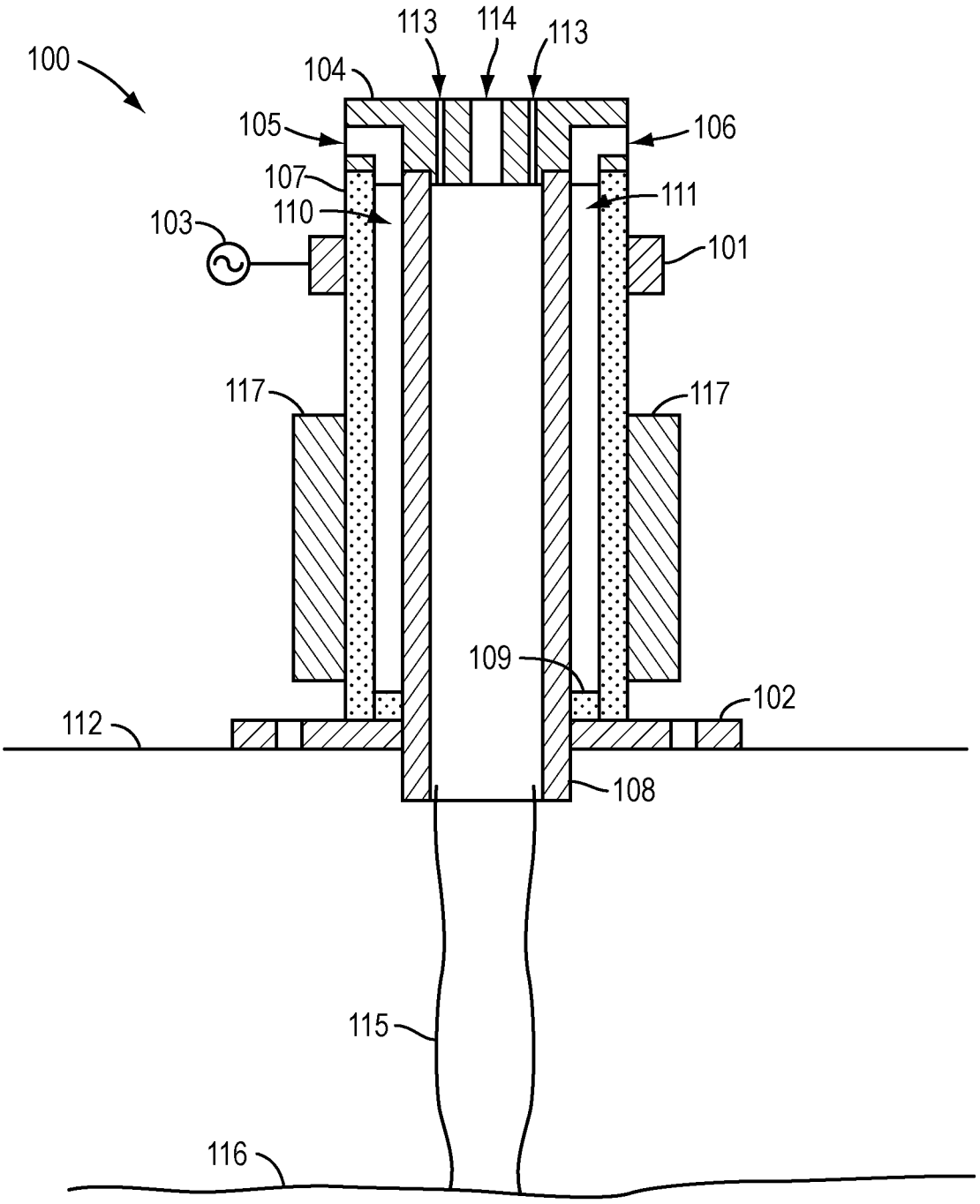
100
113
114
113
104
105
106
107
111
110
103
101
117
117
109
102
112
108
115
116

FIG. 1

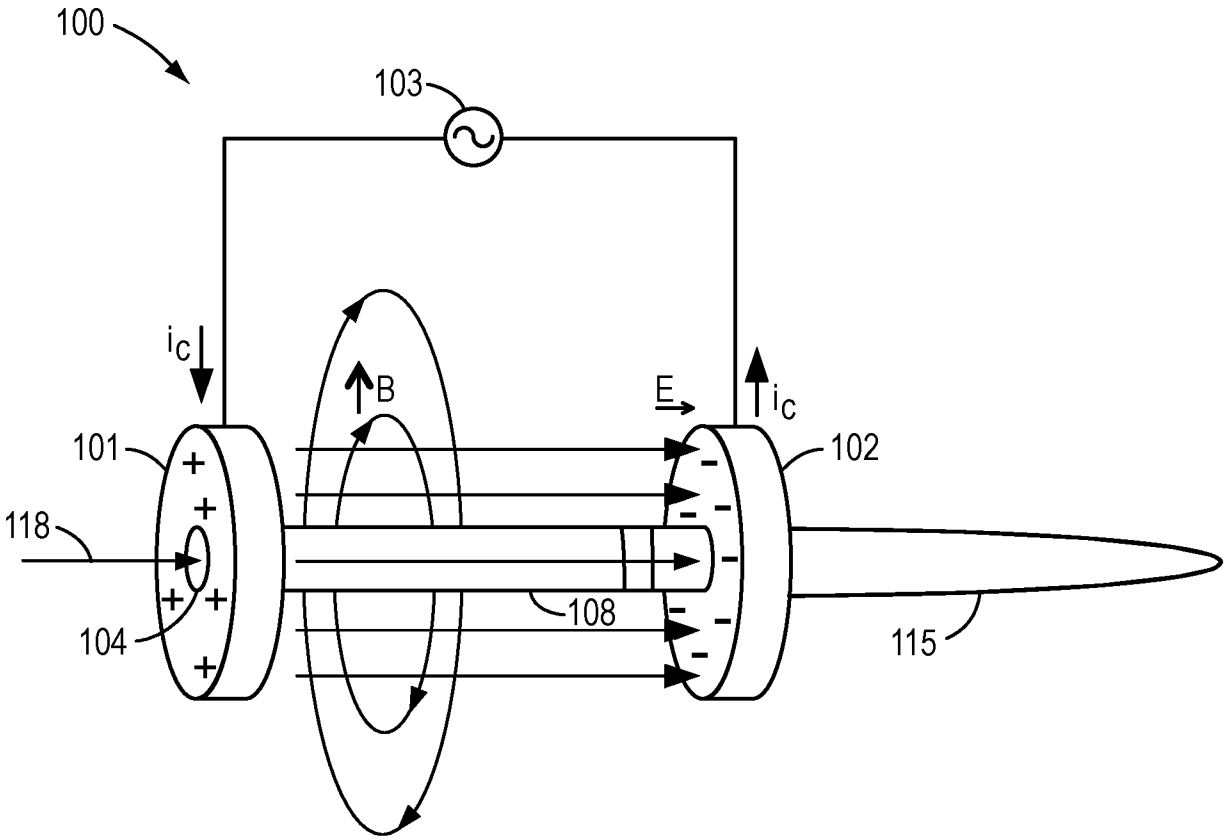


FIG. 2

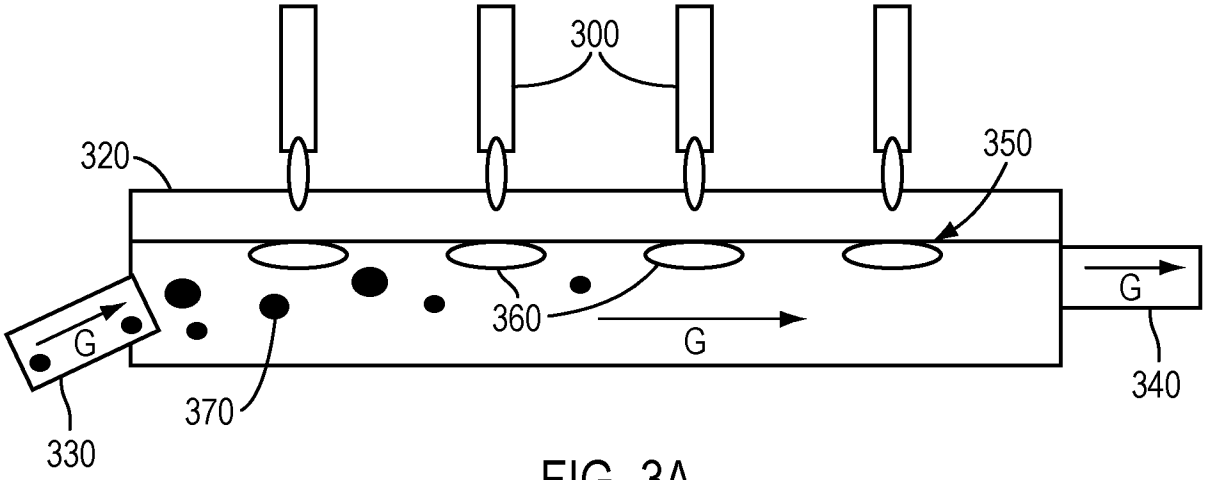
300
320
350
G
360
G
G
340
370
330

FIG. 3A

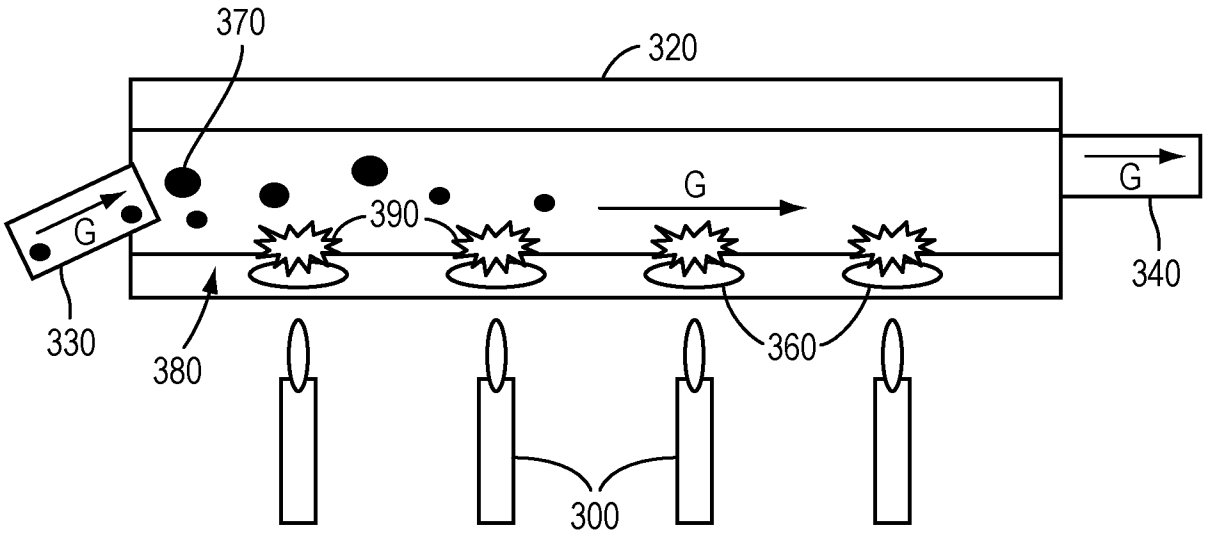
370
320
G
G
390
G
340
330
380
360
300

FIG. 3B

# INTERNATIONAL SEARCH REPORT

International application No
PCT/US2016/012557

A. CLASSIFICATION OF SUBJECT MATTER
INV. C03B5/225 C03B5/185 C03B5/193 H05H1/24
ADD.

According to International Patent Classification (IPC) or to both national classification and IPC

B. FIELDS SEARCHED

Minimum documentation searched (classification system followed by classification symbols)
C03B H05H

Documentation searched other than minimum documentation to the extent that such documents are included in the fields searched

Electronic data base consulted during the international search (name of data base and, where practicable, search terms used)
EPO-Internal

C. DOCUMENTS CONSIDERED TO BE RELEVANT

| Category* | Citation of document, with indication, where appropriate, of the relevant passages | Relevant to claim No. |
|---|---|---|
| A | US 2011/298376 A1 (KANEGAE MASATOMO [JP] ET AL) 8 December 2011 (2011-12-08) paragraphs [0001] - [0006]; claims 1,23; figures 4,15 | 1-11 |
| A | FR 2 235 885 A1 (INT STANDARD ELECTRIC CORP [US]) 31 January 1975 (1975-01-31) page 5, line 28 - page 6, line 7; figure 2 page 4, lines 12-18 | 12-17 |
| A | US 2007/175241 A1 (DELAMIELLEURE MEGAN A [US] ET AL) 2 August 2007 (2007-08-02) paragraph [0073] | 18 |

-/--

[X] Further documents are listed in the continuation of Box C.

[X] See patent family annex.

* Special categories of cited documents :

"A" document defining the general state of the art which is not considered to be of particular relevance

"E" earlier application or patent but published on or after the international filing date

"L" document which may throw doubts on priority claim(s) or which is cited to establish the publication date of another citation or other special reason (as specified)

"O" document referring to an oral disclosure, use, exhibition or other means

"P" document published prior to the international filing date but later than the priority date claimed

"T" later document published after the international filing date or priority date and not in conflict with the application but cited to understand the principle or theory underlying the invention

"X" document of particular relevance; the claimed invention cannot be considered novel or cannot be considered to involve an inventive step when the document is taken alone

"Y" document of particular relevance; the claimed invention cannot be considered to involve an inventive step when the document is combined with one or more other such documents, such combination being obvious to a person skilled in the art

"&" document member of the same patent family

| Date of the actual completion of the international search | Date of mailing of the international search report |
|---|---|
| 12 April 2016 | 22/04/2016 |

| Name and mailing address of the ISA/ | Authorized officer |
|---|---|
| European Patent Office, P.B. 5818 Patentlaan 2<br>NL - 2280 HV Rijswijk<br>Tel. (+31-70) 340-2040,<br>Fax: (+31-70) 340-3016 | Stroud, Jeremy |

1

Form PCT/ISA/210 (second sheet) (April 2005)

C(Continuation). DOCUMENTS CONSIDERED TO BE RELEVANT

| Category* | Citation of document, with indication, where appropriate, of the relevant passages | Relevant to claim No. |
|---|---|---|
| A | US 2010/199721 A1 (ANTOINE KEISHA CHANTELLE ANN [US] ET AL) 12 August 2010 (2010-08-12) paragraphs [0048], [0056], [0057], [0060] | 18-20 |
| A | US 2005/016456 A1 (TAGUCHI NORIYUKI [JP] ET AL) 27 January 2005 (2005-01-27) paragraphs [0001] - [0012]; claims 1,25; figures 1,15,1618 | 1 |
| A | US 7 719 200 B2 (LAROUSSI MOUNIR [US]) 18 May 2010 (2010-05-18) column 4, lines 14-50; figure 1 | 1 |
| A | US 2004/012319 A1 (SHUN KO EVGENY V [US]) 22 January 2004 (2004-01-22) paragraphs [0008], [0026]; claim 1 | 1 |

1

# INTERNATIONAL SEARCH REPORT

Information on patent family members

International application No
PCT/US2016/012557

| Patent document cited in search report | Publication date | Patent family member(s) | Publication date |
|---|---|---|---|
| US 2011298376 A1 | 08-12-2011 | CN 102282916 A | 14-12-2011 |
| | | JP 5891341 B2 | 23-03-2016 |
| | | US 2011298376 A1 | 08-12-2011 |
| | | WO 2010082561 A1 | 22-07-2010 |
| FR 2235885 A1 | 31-01-1975 | DE 2431723 A1 | 23-01-1975 |
| | | FR 2235885 A1 | 31-01-1975 |
| | | JP S5039312 A | 11-04-1975 |
| | | NL 7408905 A | 07-01-1975 |
| US 2007175241 A1 | 02-08-2007 | CN 101679090 A | 24-03-2010 |
| | | EP 2132147 A1 | 16-12-2009 |
| | | JP 2010523457 A | 15-07-2010 |
| | | JP 2015214477 A | 03-12-2015 |
| | | KR 20100016118 A | 12-02-2010 |
| | | TW 200906752 A | 16-02-2009 |
| | | US 2007175241 A1 | 02-08-2007 |
| | | WO 2008123942 A1 | 16-10-2008 |
| US 2010199721 A1 | 12-08-2010 | CN 102307821 A | 04-01-2012 |
| | | CN 103951160 A | 30-07-2014 |
| | | JP 2012517398 A | 02-08-2012 |
| | | KR 20110121631 A | 07-11-2011 |
| | | TW 201040115 A | 16-11-2010 |
| | | US 2010199721 A1 | 12-08-2010 |
| | | US 2012103021 A1 | 03-05-2012 |
| | | WO 2010093571 A2 | 19-08-2010 |
| US 2005016456 A1 | 27-01-2005 | AU 2003211351 A1 | 09-09-2003 |
| | | CN 1611098 A | 27-04-2005 |
| | | EP 1441577 A1 | 28-07-2004 |
| | | JP 4414765 B2 | 10-02-2010 |
| | | KR 20040045820 A | 02-06-2004 |
| | | KR 20060031704 A | 12-04-2006 |
| | | TW I315966 B | 11-10-2009 |
| | | US 2005016456 A1 | 27-01-2005 |
| | | WO 03071839 A1 | 28-08-2003 |
| US 7719200 B2 | 18-05-2010 | AU 2006220583 A1 | 14-09-2006 |
| | | BR PI0608235 A2 | 24-11-2009 |
| | | CA 2651200 A1 | 14-09-2006 |
| | | EP 1863611 A2 | 12-12-2007 |
| | | JP 2008533666 A | 21-08-2008 |
| | | US 2009121637 A1 | 14-05-2009 |
| | | WO 2006096716 A2 | 14-09-2006 |
| US 2004012319 A1 | 22-01-2004 | NONE | |