Dec. 15, 1964 C. M. SMILLIE 3,160,928

CORE MOLD VENT PLUG

Filed April 2, 1963

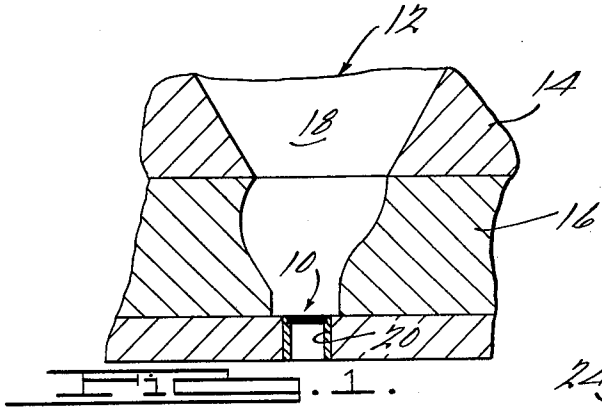


Fig. 1.

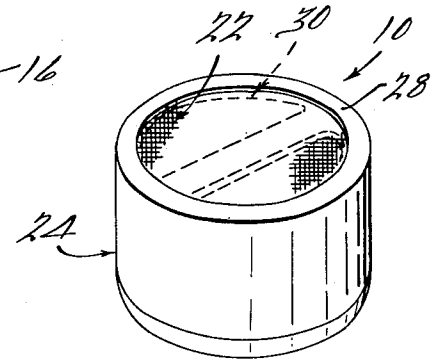


Fig. 2.

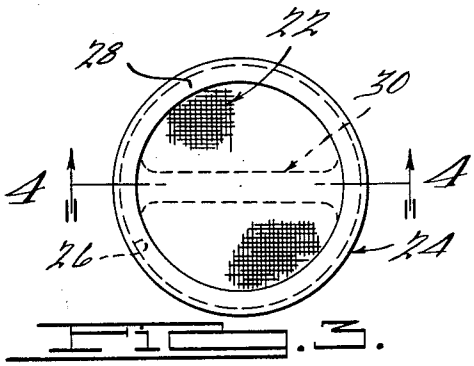


Fig. 3.

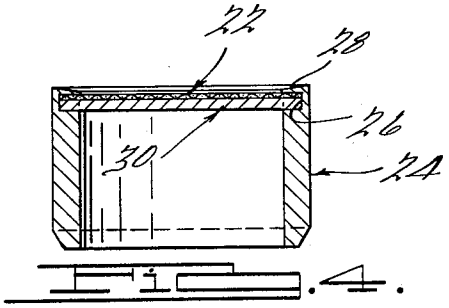


Fig. 4.

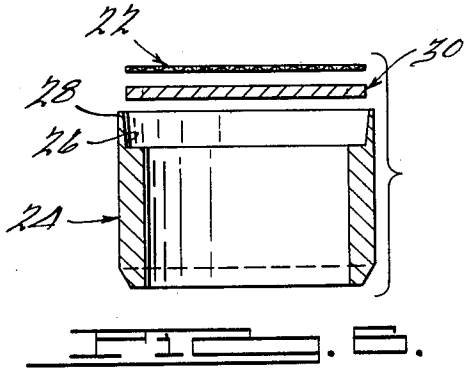


Fig. 6.

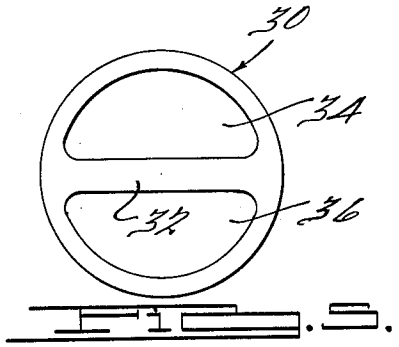


Fig. 5.

INVENTOR.
Charles M. Smillie
BY
Harness, Dickey & Pierce
ATTORNEYS.

United States Patent Office 3,160,928 Patented Dec. 15, 1964



3,160,928

# CORE MOLD VENT PLUG

Charles M. Smillie, Bloomfield Hills, Mich., assignor to C. M. Smillie and Company, Ferndale, Mich., a corporation of Michigan

Filed Apr. 2, 1963, Ser. No. 270,065
1 Claim. (Cl. 22—13)

This invention relates generally to air escape mechanisms for use in the production of sand blown cores, and more particularly to an easily replaceable air vent plug which is adapted to resist deformation upon the impact of approaching sand during a core molding operation.

The continuous improvements in the quality and quantity of casting liquid and plastic substances has prompted a substantial increase in the production of sand cores for use in forming internal cavities and passageways within such castings.

It has heretofore been the practice in the production of sand cores to force the sand into core molds or forms under a relatively high pressure to prevent air, which might cause soft spots or voids within the finished cores, from being trapped within the mold. It has also been the practice to provide air escape vents within the sides of the core molds to further alleviate air that might be entrapped therein, a typical core mold being provided with as many as from 60 to 80 air vent plugs.

It has been found that it is necessary to remove and replace the air vent plugs after each successive pour due to the fact that the binder resins utilized in the core sands plug up the vent screens, thus rendering the vents inoperable for the next successive pouring operation. Accordingly, a great deal of time and expense is incurred in transferring the core molds to a suitable tool room where the vent plugs can be easily removed. Also, the necessity for handling and transporting the core molds interferes to some extent with the production schedule of the foundry.

The present invention overcomes this difficulty by providing an air vent plug which is adapted to be easily removed directly at the pouring operation, thus eliminating the necessity for extra handling and transporting the sand core molds and, accordingly, reducing production time and expense. A further advantage of the air vent plug of the present invention over the air vents heretofore known and used is that it is adapted to resist any deformation which might be caused by sand being forced into the core mold, thus precluding the possibility of any bulges or similar surface imperfections being formed on the surfaces of the finished cores.

It is accordingly one of the primary objects of the present invention to provide an improved air vent plug adapted to be removably inserted within a sand core mold and which, upon being expended, can be conveniently removed to facilitate the replacement thereof.

Another object of the present invention is to provide an improved air vent plug having a wire mesh diaphragm and supporting means therefor to prevent any deformation of the diaphragm upon the impact of approaching sand during the core molding process.

Another object of the present invention is to provide an improved air vent plug of a simple design that can be easily assembled and economically manufactured.

Other objects and advantages of the present invention will become apparent from the following detailed description taken in conjunction with the accompanying drawings, wherein:

FIGURE 1 is a schematic view of a sand core mold illustrating the improved air vent plug of the present invention in operative association;

FIGURE 2 is a perspective view of the air vent plug



of the present invention prior to its insertion within a sand core mold;

FIGURE 3 is an enlarged plan view of the air vent plug of the present invention;

FIGURE 4 is an enlarged cross-sectional view taken along the line 4—4 of FIGURE 3;

FIGURE 5 is an enlarged plan view of the annular retaining ring utilized in the air vent plug of the present invention; and

FIGURE 6 is an exploded cross-sectional view similar to FIGURE 4.

Referring to FIGURE 1 of the drawing, an air vent plug **10**, in accordance with a preferred embodiment of the present invention, is shown in operative association with a sand core mold **12** having upper and lower end portions **14** and **16** defining a cavity **18**. The air vent plug **10** is retained within a suitable vent opening **20** by a pressed fit and effects removal of the air from within the cavity **18** upon the flow of sand therein, as will be described.

As best seen in FIGURES 2 and 3, the air vent plug **10** is provided with a perforated wire mesh diaphragm **22** adapted to preclude the escape of sand from the cavity **18** while permitting a free escape of air therefrom. The wire mesh diaphragm **22** is supported within the vent opening **20** by a cylindrical sleeve member **24**. The sleeve member **24** is provided with an annular recess **26** disposed within one end portion thereof and adapted to receive the periphery of the wire mesh diaphragm **22** therein. The cylindrical sleeve member **24** is further provided with an axially extending flange portion **28** disposed adjacent the annular recess **26** and adapted to be crimped or otherwise formed to extend radially inward over the periphery of the wire mesh diaphragm **22**, as best illustrated in FIGURE 4. The axially extending flange **28** is provided with a slightly tapered side portion to more effectively secure the diaphragm **22** to the sleeve **24** upon being crimped thereon.

An annular retaining ring **30**, which is adapted to be disposed within the plug **10** directly below the wire mesh diaphragm **22**, is provided to internally support the diaphragm **22** during the core molding process. The peripheral portion of the ring **30** is adapted to be partially inserted within the annular recess **26** and be secured directly adjacent the periphery of the diaphragm **22** upon a crimping of the flange **28**.

The retaining ring **30** is provided with a diametrically extending bridge member **32** defining diametrically opposed apertures **34** and **36** within the ring **30**. The bridge member **32** is adapted to further support the diaphragm **22** to prevent any deformation thereof, and also facilitate convenient removal of the air vent plug **10**, as will be described.

At such time as it is desired to remove the air vent plug **10** from within the vent opening **20**, it is merely necessary to punch a hole in the wire mesh diaphragm **22** on either side of the bridge **32** with a suitable tool such as an awl or prick punch. A hook shaped tool is then inserted into the hole thus formed and engaged behind the bridge **32**. Upon exerting a minimum axially directed force on the hook shaped tool, the plug **10** is easily withdrawn. Accordingly, it should be noted that since the peripheral portion of the retaining ring **30** underlies both the periphery of the wire mesh diaphragm **22** and the crimped flange portion **28**, the complete air vent plug assembly is removed in a single operation upon withdrawing the ring **30**. This feature obviates the possibility of removing only the diaphragm portion of the vent plug while leaving the cylindrical sleeve portion remaining within the vent opening, a frequently oc-

curring annoyance experienced upon attempting to remove air vent plugs disclosed by the prior art.

While it is apparent that the preferred embodiment herein illustrated is well calculated to fulfill the objects stated, it will be appreciated that the invention is susceptible to modification, variation and change without departing from the proper scope or fair meaning of the subjoined claim.

What is claimed is:

An air vent plug for core boxes and the like comprising an annular body having a central opening therethrough and an annular recess at one end of said opening defining a radial shoulder and in-turned flange means extending from said shoulder, a wire mesh diaphragm extending across said opening with the annular marginal edge portion thereof confined between said shoulder and said flange means, and a flat radially extending supporting ring underlying the marginal edge portion of said wire mesh diaphragm and clamped against said shoulder by said flange means, said supporting ring having a diametrically extending bridge for supporting the central portion of said diaphragm and for providing an abutment behind which a tool inserted into said opening through said wire mesh diaphragm can be engaged for removing said vent plug from the core box, said flange means clamping and securely holding the peripheral portion of said ring during removal of said plug to assure release of said body and the entire plug from said box.



**References Cited by the Examiner**

UNITED STATES PATENTS

| | | | |
|---|---|---|---|
| 1,236,100 | 8/17 | Nance | 166—229 |
| 2,060,350 | 11/36 | Siler | 22—13 |

OTHER REFERENCES

Modern Castings, October 1956, vol. 30, page 53 relied on.

MICHAEL V. BRINDISI, *Primary Examiner.*

MARCUS U. LYONS, *Examiner.*