(12) INTERNATIONAL APPLICATION PUBLISHED UNDER THE PATENT COOPERATION TREATY (PCT)

(19) World Intellectual Property Organization
International Bureau

(43) International Publication Date
13 January 2011 (13.01.2011)

PCT

(10) International Publication Number
WO 2011/005308 A1

(51) International Patent Classification:
A45D 40/00 (2006.01) *A47F 7/28* (2006.01)

(21) International Application Number:
PCT/US2010/001905

(22) International Filing Date:
6 July 2010 (06.07.2010)

(25) Filing Language: English

(26) Publication Language: English

(30) Priority Data:
12/498,931 7 July 2009 (07.07.2009) US

(71) Applicant *(for all designated States except US)*: **S. C. JOHNSON & SON, INC.** [US/US]; 1525 Howe Street, Racine, Wisconsin 53403 (US).

(72) Inventors; and

(75) Inventors/Applicants *(for US only)*: **SHORT, Michael, E.** [US/US]; 1710 - 5-1/2 Mile Road, Racine, Wisconsin 53402 (US). **HOADLEY, David, A.** [US/US]; 309 West Blvd., Racine, Wisconsin 53405 (US). **DEMAREST, Scott, W.** [US/US]; 7607 West River Road, Caledonia, Wisconsin 53108 (US). **MORRIS, Kit, R.** [GB/US]; 308 W. Johanna Street, Austin, Texas 78704 (US). **KIM, Sunny** [US/US]; 4600 Monterey Oaks Blvd., Apt. 112, Austin, Texas 78749 (US). **CARLSON, David, R.** [US/US]; 10433 Highlawn Court, Cedarburg, Wisconsin 53012 (US). **JOHNSON, Mark, E.** [US/US]; 408 S. Wille, Mount Prospect, Illinois 60056 (US).

(74) Agent: **MILLER, Robert, A.**; S. C. Johnson & Son, Inc., 1525 Howe Street, Racine, Wisconsin 53403 (US).

(81) Designated States *(unless otherwise indicated, for every kind of national protection available)*: AE, AG, AL, AM, AO, AT, AU, AZ, BA, BB, BG, BH, BR, BW, BY, BZ, CA, CH, CL, CN, CO, CR, CU, CZ, DE, DK, DM, DO, DZ, EC, EE, EG, ES, FI, GB, GD, GE, GH, GM, GT, HN, HR, HU, ID, IL, IN, IS, JP, KE, KG, KM, KN, KP, KR, KZ, LA, LC, LK, LR, LS, LT, LU, LY, MA, MD, ME, MG, MK, MN, MW, MX, MY, MZ, NA, NG, NI, NO, NZ, OM, PE, PG, PH, PL, PT, RO, RS, RU, SC, SD, SE, SG, SK, SL, SM, ST, SV, SY, TH, TJ, TM, TN, TR, TT, TZ, UA, UG, US, UZ, VC, VN, ZA, ZM, ZW.

(84) Designated States *(unless otherwise indicated, for every kind of regional protection available)*: ARIPO (BW, GH, GM, KE, LR, LS, MW, MZ, NA, SD, SL, SZ, TZ, UG, ZM, ZW), Eurasian (AM, AZ, BY, KG, KZ, MD, RU, TJ, TM), European (AL, AT, BE, BG, CH, CY, CZ, DE, DK, EE, ES, FI, FR, GB, GR, HR, HU, IE, IS, IT, LT, LU, LV, MC, MK, MT, NL, NO, PL, PT, RO, SE, SI, SK, SM, TR), OAPI (BF, BJ, CF, CG, CI, CM, GA, GN, GQ, GW, ML, MR, NE, SN, TD, TG).

Published:

— *with international search report (Art. 21(3))*

(54) **Title**: RETAIL FRAGRANCE SAMPLING DISPLAY

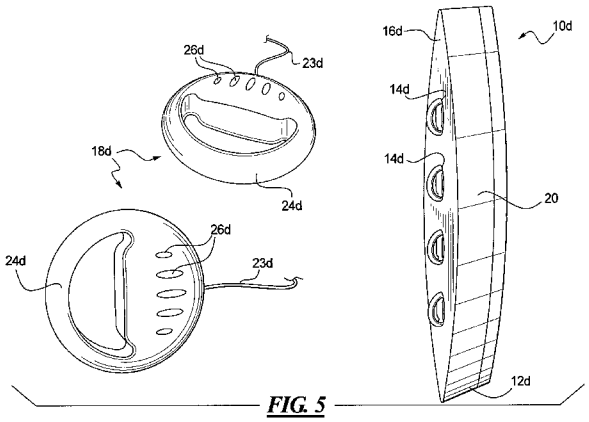

FIG. 5

(57) **Abstract**: A fragrance sampling display (10) for retail environments is disclosed. The sampling display may include a dock (12) having a removable faceplate (16a) and sidewalls (20a). The dock (12) may include one or more receptacles (14) and one or more scent modules (18), wherein each scent module is associated with and partially inserted into only one of the receptacles. The scent modules may be removably disposed in the corresponding receptacles by retractable cords (22c). Each of the scent modules may include a different volatile active corresponding to a different fragrance product and vent holes (26g) to facilitate passive emission of the associated fragrance. The vent holes may be configured so as to be substantially sealed while the associated scent module is in its respective receptacle.

WO 2011/005308 A1

RETAIL FRAGRANCE SAMPLING DISPLAY

FIELD OF THE DISCLOSURE

[0001] The present disclosure generally relates to displays for use in retail environments, and more particularly, relates to a sampling display for demonstrating fragrance products.

BACKGROUND OF THE DISCLOSURE

[0002] Displays for promoting and demonstrating fragrance products within a retail environment are well known in the art. Such displays serve to catch the attention of consumers and persuade consumers to purchase the product being advertised. To accomplish this, fragrance product displays generally aim to provide pleasing aesthetics and proper samples of the fragrance products. Although appearance is important, consumers prefer to know exactly what the fragrance smells like before purchasing a product for personal or home use. For the most part, descriptions on the packaging or labeling are not sufficient or accurate in describing a scent of the product. Accordingly, displays for promoting a fragrance share the common goal of providing an accurate sample of the fragrance being advertised.

[0003] Some of the currently existing solutions range from something as simple as scratch and sniff pads on product packaging to more complex devices which selectively atomize one of a plurality of scents according to user input. Scratch and sniff pads generally wear off too easily and fail to accurately reproduce the actual scent of the product. More complicated devices and atomizers typically take up too much space and are not cost effective. Therefore, displays promoting fragrance products within a retail

environment usually resort to providing a plurality of sample bottles or testers to allow consumers to examine each available scent at the point of sale.

[0004] Testers are essentially sample bottles or containers of the actual fragrance that consumers can spray into the air or onto a sampling card to examine the fragrance firsthand. However, multiple testers from different manufacturers are usually grouped together in a single area designated for sampling, such as on countertops, shelves, or the like. This takes up a considerable amount of space and adds clutter. Such an arrangement also makes it difficult to distinguish and advertise one particular fragrance product over a competing brand or product line. Additionally, testers are typically provided only for perfumes and colognes, but not for fragrance dispensers designed for the home. Consequently, when selecting a fragrance for home use, consumers are forced to guess by reading the description on package labels, smelling the packaging, or by opening the package in the store.

[0005] Furthermore, as fragrance samples and testers are exposed and easily accessible, they are more likely to be misplaced, stolen, damaged, or the like. This can cause confusion or frustration to consumers and the staff of a retail establishment. In addition to being easily accessible, testers tend to lack substantial means of controlling or limiting the amount of the sample to be dispensed per use. For instance, sprays or active fragrance dispensers may be used in excess amounts than is necessary, while opened passive fragrance dispensers may be left unsealed and prone to evaporation. Therefore, providing samples of a fragrance product via testers often results in significant volumes of the product being wasted on refilling or replacing depleted samples.

[0006] Therefore, multiple needs exist for an aesthetically pleasing display which provides a proper demonstration of a brand or product line of fragrances. More specifically, needs exist for a display that reduces clutter and sets the products apart from the competition. The need also exists for a fragrance display which provides means of minimizing the amount of the product that is wasted on sampling. An ideal display should also be cost-conscious and provide a display that may be easily installed and readily adaptable to new products or changing retail environments. The display should also require minimal space and be mountable on existing shelving units.

SUMMARY OF THE DISCLOSURE

[0007] In accordance with one aspect of the disclosure, a fragrance sampling display apparatus is provided. The fragrance sampling display comprises a dock attachable to a shelving unit; one or more receptacles disposed on a surface of the dock; and one or more scent modules, each scent module comprising a volatile active of a different fragrance, each scent module being associated with and retractably coupled to one of the receptacles, and each scent module being biased into a retracted state.

[0008] In accordance with another aspect of the disclosure, a fragrance sampling display apparatus is provided. The fragrance sampling display apparatus comprises a dock attachable to a shelving unit; one or more receptacles disposed on a surface of the dock; and one or more scent modules, each scent module comprising a volatile active of a different fragrance, each scent module being associated with and retractably coupled to one of the receptacles, and each scent module being substantially prohibited from emitting the associated fragrance when in a retracted state.

[0009] In accordance with another aspect of the disclosure, a fragrance sampling display apparatus is provided. The fragrance sampling display apparatus comprises a dock attachable to a shelving unit and having a faceplate; one or more receptacles disposed on the faceplate; and one or more scent modules, each scent module comprising a volatile active of a different fragrance, each scent module being associated with and retractably coupled to one of the receptacles with a retractable cord, each scent module being configured to passively emit a fragrance from a surface thereof when removed from the associated receptacle and being substantially prohibited from emitting the associated fragrance when in a retracted state.

[0010] These and other aspects of this disclosure will become more readily apparent upon reading the following detailed description when taken in conjunction with the accompanying drawings.

BRIEF DESCRIPTION OF THE DRAWINGS

[0011] FIG. 1 is a perspective view of an exemplary fragrance sampling display constructed in accordance with the teaching of the disclosure;

[0012] FIGS. 2A and 2B are front, side and perspective views of a fragrance sampling display;

[0013] FIGS. 3A and 3B are front and side views of a fragrance sampling display;

[0014] FIG. 4 is a cross-sectional view of a fragrance sampling display;

[0015] FIG. 5 is a perspective view of another fragrance sampling display;

[0016] FIG. 6 is a perspective view of yet another fragrance sampling display;

[0017] FIG. 7 is a perspective view of a horizontally mounted fragrance sampling display;

[0018] FIGS. 8A-8C are various views of another horizontally mounted fragrance sampling display; and

[0019] FIG. 9 is a perspective view of yet another horizontally mounted fragrance sampling display.

[0020] While the present disclosure is susceptible to various modifications and alternative constructions, certain illustrative embodiments thereof have been shown in the drawings and will be described below in detail. It should be understood, however, that there is no intention to limit the present invention to the specific forms disclosed, but on the contrary, the intention is to cover all modifications, alternative constructions, and equivalents falling with the spirit and scope of the present invention.

DETAILED DESCRIPTION

[0021] Referring now to the drawings and with particular reference to FIG. 1, an exemplary sampling display apparatus for demonstrating fragrance products is provided and referred to as reference number 10. It is understood that the teachings of the disclosure can be used to construct fragrance sampling displays above and beyond that specifically disclosed below. One of ordinary skill in the art will readily understand that the following are exemplary embodiments.

[0022] As shown in FIG. 1, a sampling display 10 may conveniently showcase one or more products within a retail establishment. Moreover, the sampling display 10 may allow consumers to accurately sample different fragrances and/or fragrance products belonging to a particular brand, product line, or the like, at the point of sale. The

fragrance sampling display 10 may be installed or removably coupled to existing shelves 100 within a retail environment so as to facilitate installation and to reduce costs. The sampling display 10 may also be configured as a standalone display, or provided on a wall, countertop, or the like. In general, the sampling display 10 may include a dock 12 having one or more receptacles 14 disposed on a faceplate or a front surface 16 thereof. The sampling display 10 may further provide one or more removable scent modules 18 that are at least partially received within the receptacles 14 of the dock 12. Each of the scent modules 18 may carry a volatile active substance corresponding to a different fragrance. Consumers that are unsure of the fragrance of a particular product due to product packaging may sample the fragrance firsthand by removing and examining the corresponding scent module 18.

[0023] Turning to FIGS. 2A and 2B, another sampling display 10a for fragrance products is provided. As shown, the dock 12a may be elongated, and further, may include curved sidewalls 20a formed of any suitable material such as wood, plastic, metal, or the like. Alternatively, the sidewalls 20a may comprise straight panels to form a rectangular body. The faceplate 16a may also be formed of any suitable material such as wood, plastic, metal, or the like, and conform to the shape formed by the sidewalls 20a. For example, the substantially oval shape of the faceplate 16a of FIG. 2B is defined by the curved sidewalls 20a of the dock 12a. The dock 12a additionally provides one or more rounded recesses or receptacles 14a linearly disposed along the length of the faceplate 16a. Depending on the desired application, alternative arrangements and modifications to the size, shape, and the number of receptacles 14a may be provided.

[0024] Referring to FIGS. 3A and 3B, another fragrance sampling display 10b is provided. As in previous embodiments, the dock 12b may include one or more receptacles 14b, a faceplate 16b and sidewalls 20b. While alternative arrangements and modifications may be made, the particular dock 12b of FIGS. 3A and 3B provides four oval receptacles 14b and a substantially oval faceplate 16b that is partially defined by the curved sidewalls 20b of the dock 12b. The dock 12b is also provided with four scent modules 18b partially disposed within the four receptacles 14b. Each scent module 18b may carry a volatile active of a different fragrance or scent, and further, may be associated with only one of the four receptacles 14b of the dock 12b. Moreover, in contrast to the receptacles 14a of FIGS. 2A and 2B, the receptacles 14b of FIGS. 3A and 3B may be labeled according to the different fragrances provided. As shown in FIG. 3A, and by way of example only the receptacles 14b may be labeled as Tropical, Outdoor Fresh, Fresh Breeze, Apple Spice, and the like. Other names and scents are certainly possible. Accordingly, a scent module 18b having a specific scent must be associated with only the receptacle 14b labeled as such to avoid confusion. As shown in FIG. 3B, the sidewalls 20b may also provide additional graphics and/or text associated with each of the receptacles 14b and scent modules 18b to further distinguish each of the samples available. Furthermore, the faceplate 16b and sidewalls 20b may be removably coupled to the dock 12b or replaceable such that the labels, text or graphics are readily adaptable to new products and changing retail environments.

[0025] To ensure that each scent module 18c is retained within its respective receptacle 14c, each scent module 18c may be retractably coupled to its corresponding receptacle 14c, as shown in the cross-sectional view of FIG. 4. More specifically, a retractable cord module 22c, or the like, may be disposed within the dock 12c and in close proximity to

each receptacle 14c such that it remains stationary with respect to the display 10c. The cord 23c of each retractable cord module 22c may be coupled to the corresponding scent module 18c. Accordingly, each scent module 18c may be independently biased toward the dock 12c and into the retracted position, as shown in FIG. 4. In order to facilitate removal of the scent modules 18c from the dock 12c, the scent modules 18c may be provided with handles 24c, rings, grips, tabs, or the like. To sample a particular fragrance from the display 10c of FIG. 4, a consumer may simply remove the corresponding scent module 18c from the dock 12c by pulling on the handle 24c of the scent module 18c in the direction shown by arrow A. After examining the fragrance of the scent module 18c, the consumer may simply let go of the scent module 18c to allow it to retract to its designated receptacle 14c.

[0026] Still referring to the embodiment of FIG. 4, the scent modules 18c may be configured to emit a volatile active or fragrance by passive means. Accordingly, one or more apertures or vent holes 26c may be provided on the surface of each scent module 18c to facilitate passive emission of a fragrance. However, to prolong the life of the volatile active and to minimize wasted fragrance emissions, the vent holes 26c may require sealing means when not in use. For example, the display 10c of FIG. 4 is configured so as to substantially seal the vent holes 26c of each scent module 18c when they are not in use and inserted into their respective receptacles 14c. More specifically, the vent holes 26c of each scent module 18c may be positioned and arranged according to the depth and shape of the receptacles 14c. As a result, when a scent module 18c is not in use and in its respective receptacle 14c, the fitment between the inner surface of the receptacle 14c and the outer surface of the scent module 18c may substantially seal the vent holes 26c and effectively reduce wasted emissions.

[0027] Turning now to FIG. 5, another exemplary fragrance sampling display 10d is provided. The sampling display 10d of FIG. 5 may be mounted horizontally or vertically and includes a dock 12d with one or more receptacles 14d, a substantially oval faceplate 16d and curved sidewalls 20d. As opposed to the previous embodiments, the sidewalls 20d of the dock 12d may be formed of acrylic, or any other transparent or translucent material. The dock 12d may also be provided with one or more scent modules 18d that are held in the respective receptacles 14d by retractable cords 23d, or the like. Each scent module 18d may be provided with ring-like handles 24d to allow a consumer to easily pull the scent module 18d out and away from the dock 12d for sampling. The scent modules 18d may further include vent holes 26d to facilitate fragrance emissions. As disclosed in previous embodiments, the vent holes 26d of FIG. 5 are positioned so as to be substantially sealed when the scent modules 18d are reinserted into the respective receptacles 14d. Alternatively, a surface of the scent modules 18d may be formed of the associated volatile active. For example, the surface of each scent module 18d may be molded of a plastics material, or the like, that is compounded with the associated volatile active so as to passively emit a fragrance directly from the surface thereof.

[0028] Referring to FIG. 6, another fragrance sampling display 10e is provided having similar features as with the display 10d of FIG. 5. The sampling display 10e of FIG. 6 may also be mounted horizontally or vertically and includes a dock 12e with one or more receptacles 14e, a substantially oval faceplate 16e and curved sidewalls 20e. The faceplate 16e and sidewalls 20e of the dock 12e may be formed of acrylic, or any other transparent or translucent material. The sampling display 10e may also include one or more scent modules 18e with transparent or translucent outer surfaces to provide a more aesthetically pleasing effect. The scent modules 18e may be held in the respective

receptacles 14e by retractable cords 23e and retractable cord modules hidden within the base of the dock 12e. As opposed to the previous embodiments, each scent module 18e may provide a gripping surface 24e rather than a handle to allow easier consumer access to the fragrance samples. The scent modules 18e may further include vent holes 26e positioned so as to be substantially sealed when the scent modules 18e are reinserted into the respective receptacles 14e.

[0029] Referring now to FIG. 7, yet another fragrance sampling display 10f is provided. Similar to previous embodiments, the sampling display 10f may include a dock 12f, one or more receptacles 14f, a front surface or faceplate 16f, sidewalls 20f and one or more scent modules 18f partially disposed within the receptacles 14f of the dock 12f. One or more retractable cord modules 22f may be fixed underneath the dock 12f and in close proximity to the respective receptacles 14f so as to remain stationary with respect to the sampling display 10f. The cord 23f of each retractable cord module 22f may be coupled to the respective scent module 18f to bias scent module 18f into the default position, as shown in FIG. 7. As with in the embodiments of FIG. 6, each scent module 18f may include gripping surfaces 24f rather than a handle to allow easier consumer access to the fragrance samples. The scent modules 18f may further include vent holes 26f positioned so as to be substantially sealed when the scent modules 18f are not in use. Furthermore, in the particular embodiment of FIG. 7, the sampling display 10f is mounted horizontally onto an existing shelf structure 100. However, as the scent modules 18f are biased into the respective receptacles 14f, the display 10f may also be mounted vertically, diagonally, or any other suitable orientation.

[0030] Turning to FIGS. 8A-8C, various views of another fragrance sampling display 10g is provided. The sampling display 10g may include a dock 12g, one or more receptacles 14g, a front surface or faceplate 16g, a wall 20g and one or more scent modules 18g partially disposed within the receptacles 14g of the dock 12g. One or more retractable cord modules (not shown) may be fixed underneath the dock 12g and in close proximity to the respective receptacles 14g so as to remain stationary with respect to the sampling display 10g. Each retractable cord 23g may be coupled to the respective scent module 18g to bias the scent module 18h into the default retracted position. The scent modules 18g may further include vent holes 26g positioned so as to be substantially sealed when the scent modules 18g are not in use. As shown in FIG. 8C, the receptacles 14g of the display 10g may also include pockets 28g to further help support the respective scent modules 18g and to substantially prevent fragrance emissions when the scent modules 18g are in the retracted state.

[0031] Referring now to FIG. 9, yet another fragrance sampling display 10h is provided. Similar to previous embodiments, the sampling display 10h may include a dock 12h, one or more receptacles 14h, a faceplate 16h and one or more scent modules 18h retractably coupled to the receptacles 14h. Unlike previous embodiments, the receptacles 14h may be configured to be flush with the faceplate 16h and not recessed. One or more retractable cord modules (not shown) may be fixed underneath the dock 12h and in close proximity to the respective receptacles 14h so as to remain stationary with respect to the sampling display 10h. Each retractable cord 23h may be coupled to the respective scent module 18h to bias the respective scent module 18h into the default retracted position. Rather than vent holes, the scent modules 18h of the embodiment of FIG. 9 may provide a volatile active directly on a designated surface 26h thereof. In

particular, an emitter surface 26h of each scent module 18h may be at least partially formed or molded of a compound material which includes the associated volatile active material therein. As shown, the flat interface between the receptacle 14h and the emitter surface 26h may serve to substantially seal or prevent fragrance emissions when the scent module 18h is not in use and in the retracted state. Each of the receptacles 14h may also be partially recessed and/or provided with a seal to further prevent fragrance emissions.

[0032] Based on the foregoing, it can be seen that the present disclosure provides an aesthetically pleasing display which properly promotes and demonstrates a brand or product line of fragrances. More specifically, the present disclosure provides a compact display that reduces clutter and sets the sampled products apart from the competition. The fragrance display requires minimal space and is mountable on existing shelving units. The fragrance display is also cost-conscious in that it provides means of minimizing the amount of the product that is wasted on sampling. Furthermore, the fragrance display is also readily adaptable to new products or changing retail environments.

[0033] While only certain embodiments have been set forth, alternatives and modifications will be apparent from the above description to those skilled in the art. These and other alternatives are considered equivalents and within the spirit and scope of this disclosure.

WHAT IS CLAIMED IS:

1. A fragrance sampling display apparatus, comprising:

a dock attachable to a shelving unit;

one or more receptacles disposed on a surface of the dock; and

one or more scent modules, each scent module comprising a volatile active of a different fragrance, each scent module being associated with and retractably coupled to one of the receptacles, and each scent module being biased into a retracted state.

2. The fragrance sampling display apparatus of claim 1, wherein each scent module is substantially prohibited from emitting the associated fragrance when in the retracted state.

3. The fragrance sampling display apparatus of claim 1, wherein a surface of each scent module is formed of the associated volatile active.

4. The fragrance sampling display apparatus of claim 3, wherein the surface of each scent module is molded of a material compounded with the associated volatile active.

5. The fragrance sampling display apparatus of claim 1, wherein each scent module provides vent holes through which the associated volatile active is passively released.

6. The fragrance sampling display apparatus of claim 1, wherein each scent module is at least partially received in the associated receptacle when in the retracted state.

7. The fragrance sampling display apparatus of claim 1, wherein each receptacle is labeled according to the fragrance of the associated scent module.

8. The fragrance sampling display apparatus of claim 1, wherein each scent module is coupled to the associated receptacle with a retractable cord.

9. The fragrance sampling display apparatus of claim 1, wherein each scent module provides a handle.

10. The fragrance sampling display apparatus of claim 1, wherein the dock is elongated and horizontally coupled to the shelving unit.

11. A fragrance sampling display apparatus, comprising:

a dock attachable to a shelving unit;

one or more receptacles disposed on a surface of the dock; and

one or more scent modules, each scent module comprising a volatile active of a different fragrance, each scent module being associated with and retractably coupled to one of the receptacles, and each scent module being substantially prohibited from emitting the associated fragrance when in a retracted state.

12. The fragrance sampling display apparatus of claim 11, wherein each scent module is at least partially received in the associated receptacle when in the retracted state.

13. The fragrance sampling display apparatus of claim 11, wherein a surface of each scent module is formed of the associated volatile active.

14. The fragrance sampling display apparatus of claim 11, wherein each scent module provides vent holes through which the associated volatile active is passively released.

15. The fragrance sampling display apparatus of claim 11, wherein each scent module is coupled to the associated receptacle with a retractable cord.

16. A fragrance sampling display apparatus, comprising:

a dock attachable to a shelving unit and having a faceplate;

one or more receptacles disposed on the faceplate; and

one or more scent modules, each scent module comprising a volatile active of a different fragrance, each scent module being associated with and retractably coupled to one of the receptacles with a retractable cord, each scent module being configured to passively emit a fragrance from a surface thereof when removed from the associated receptacle and being substantially prohibited from emitting the associated fragrance when in a retracted state.

17. The fragrance sampling display apparatus of claim 16, wherein a surface of each scent module is formed of the associated volatile active.

18. The fragrance sampling display apparatus of claim 17, wherein the surface of each scent module is molded of a material compounded with the associated volatile active.

19. The fragrance sampling display apparatus of claim 16, wherein each scent module provides vent holes through which the associated volatile active is passively released.

20. The fragrance sampling display apparatus of claim 16, wherein each scent module is at least partially received in the associated receptacle when in the retracted state.

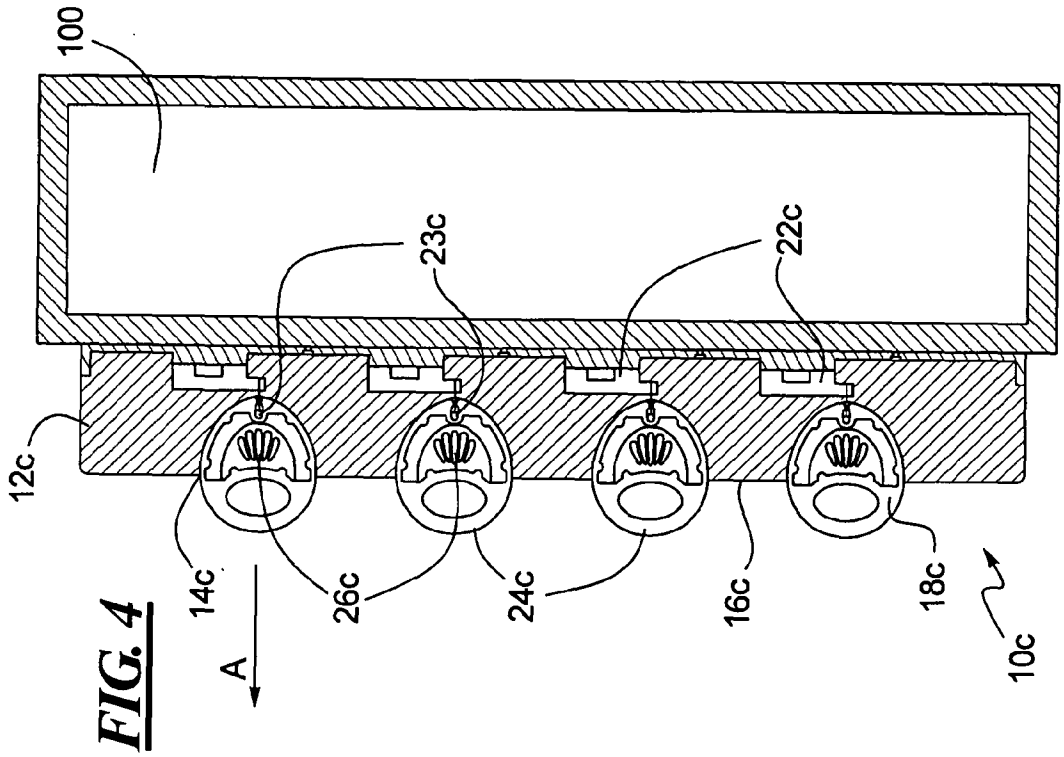
100
23c
22c
12c
14c
26c
24c
16c
18c
10c
A

FIG. 4

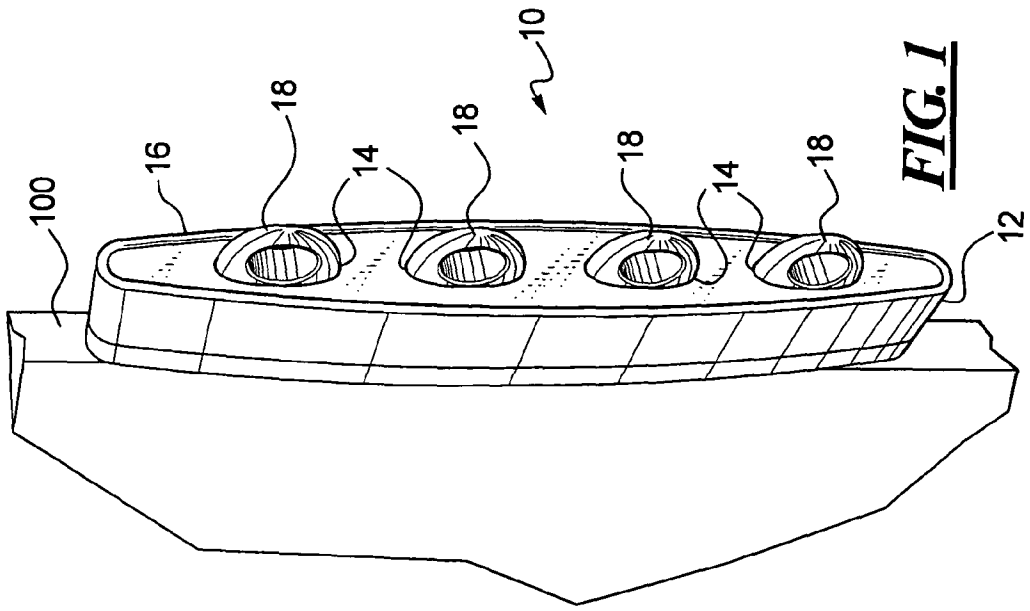
10
100
16
18
14
18
18
14
18
12

FIG. 1

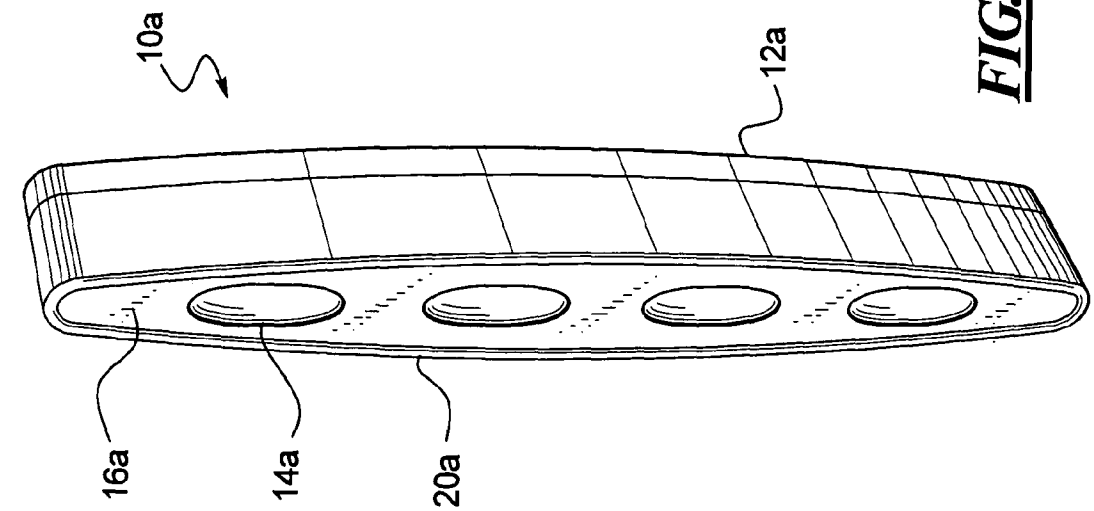

FIG. 2B

FIG. 2A

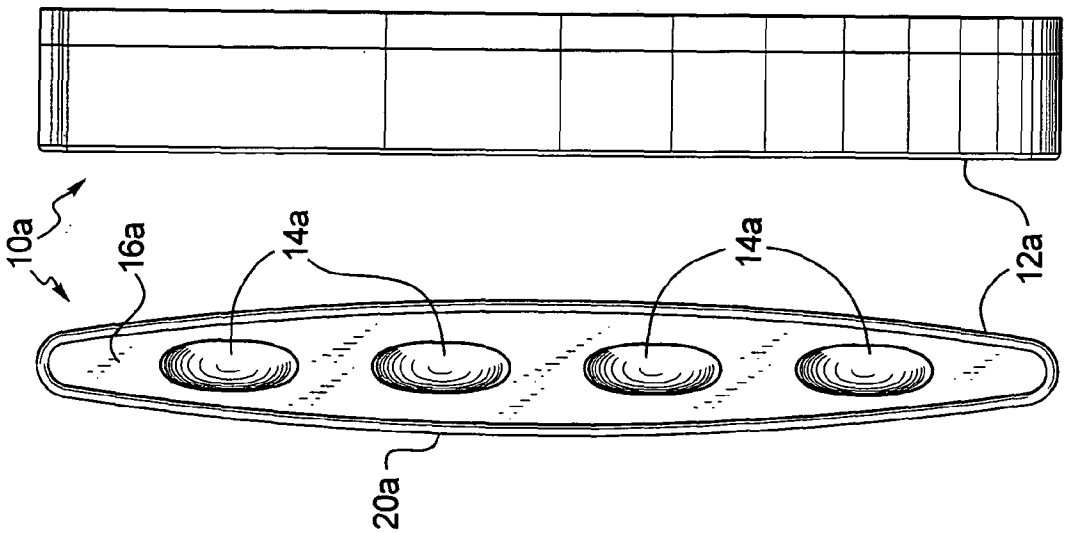

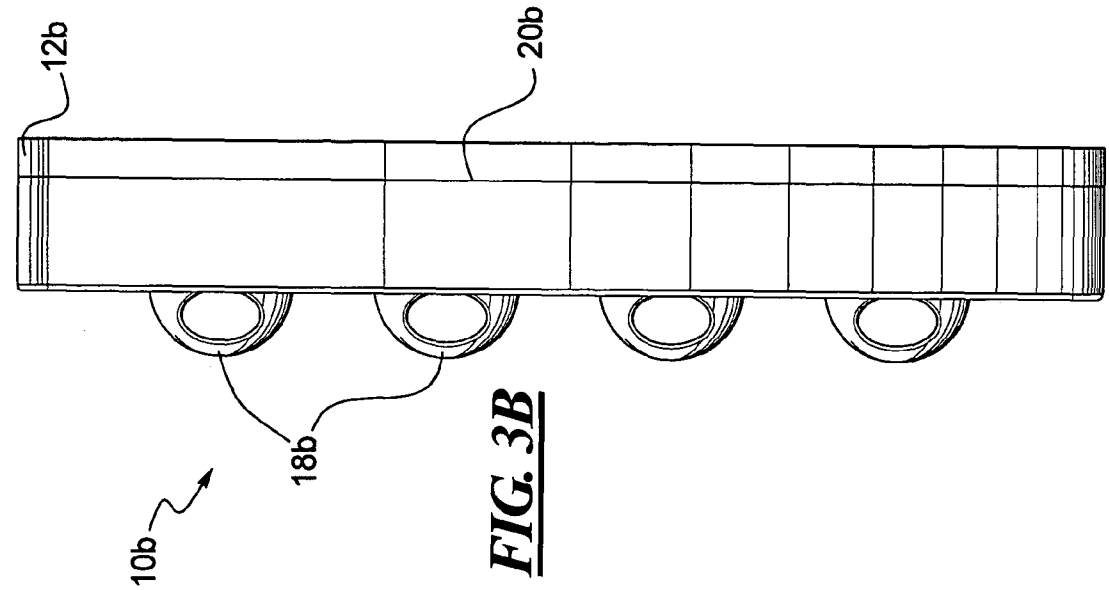

FIG. 3B

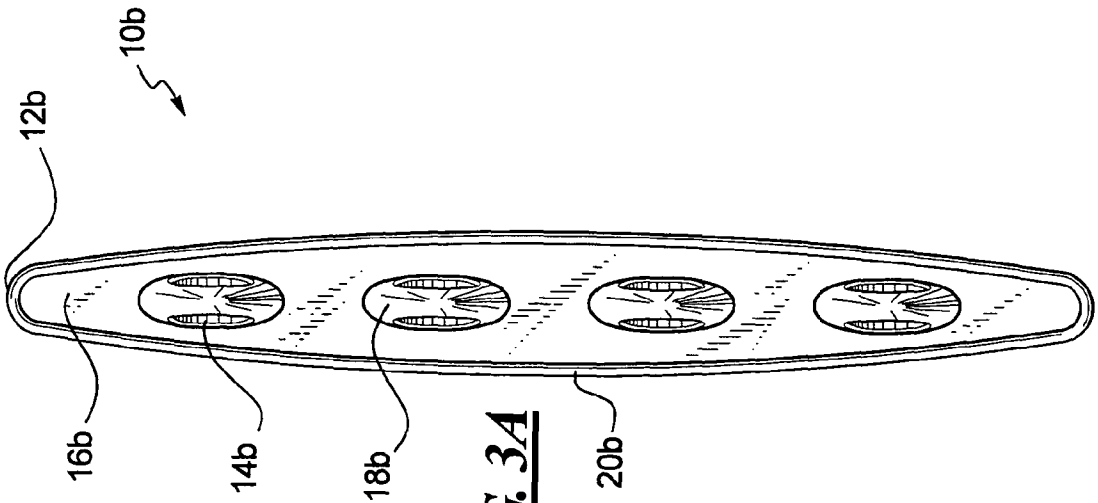

FIG. 3A

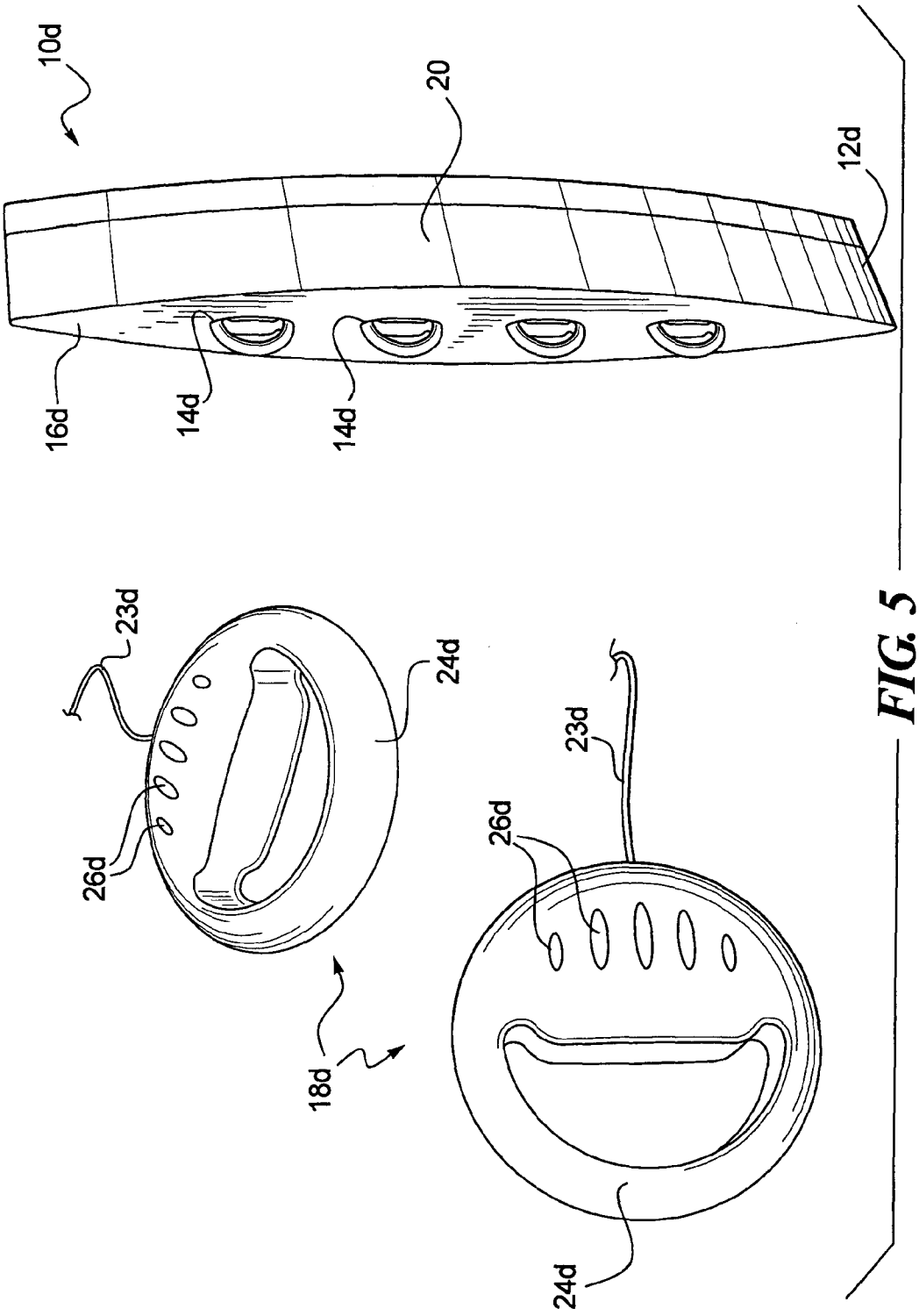

FIG. 5

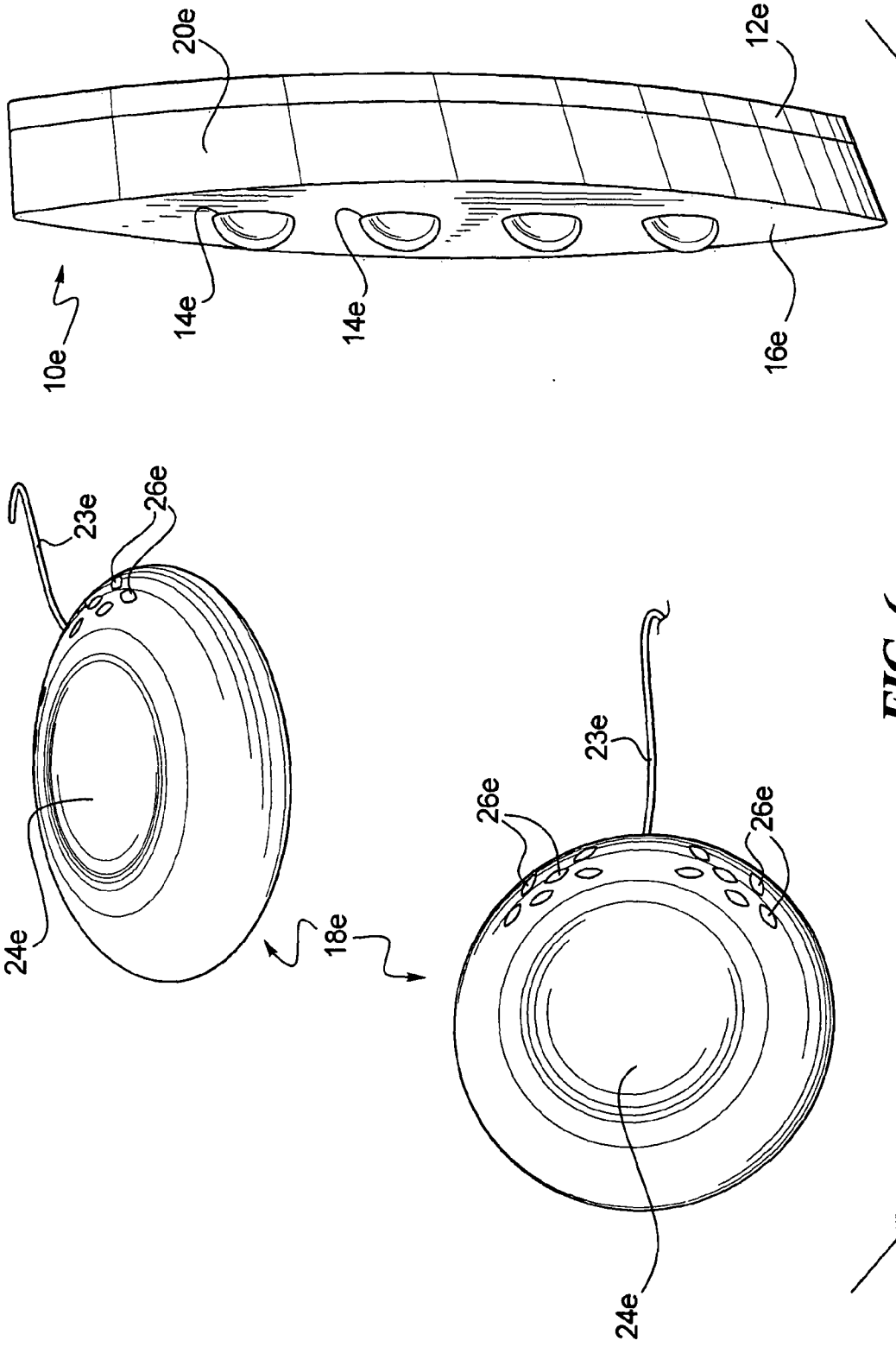

FIG. 6

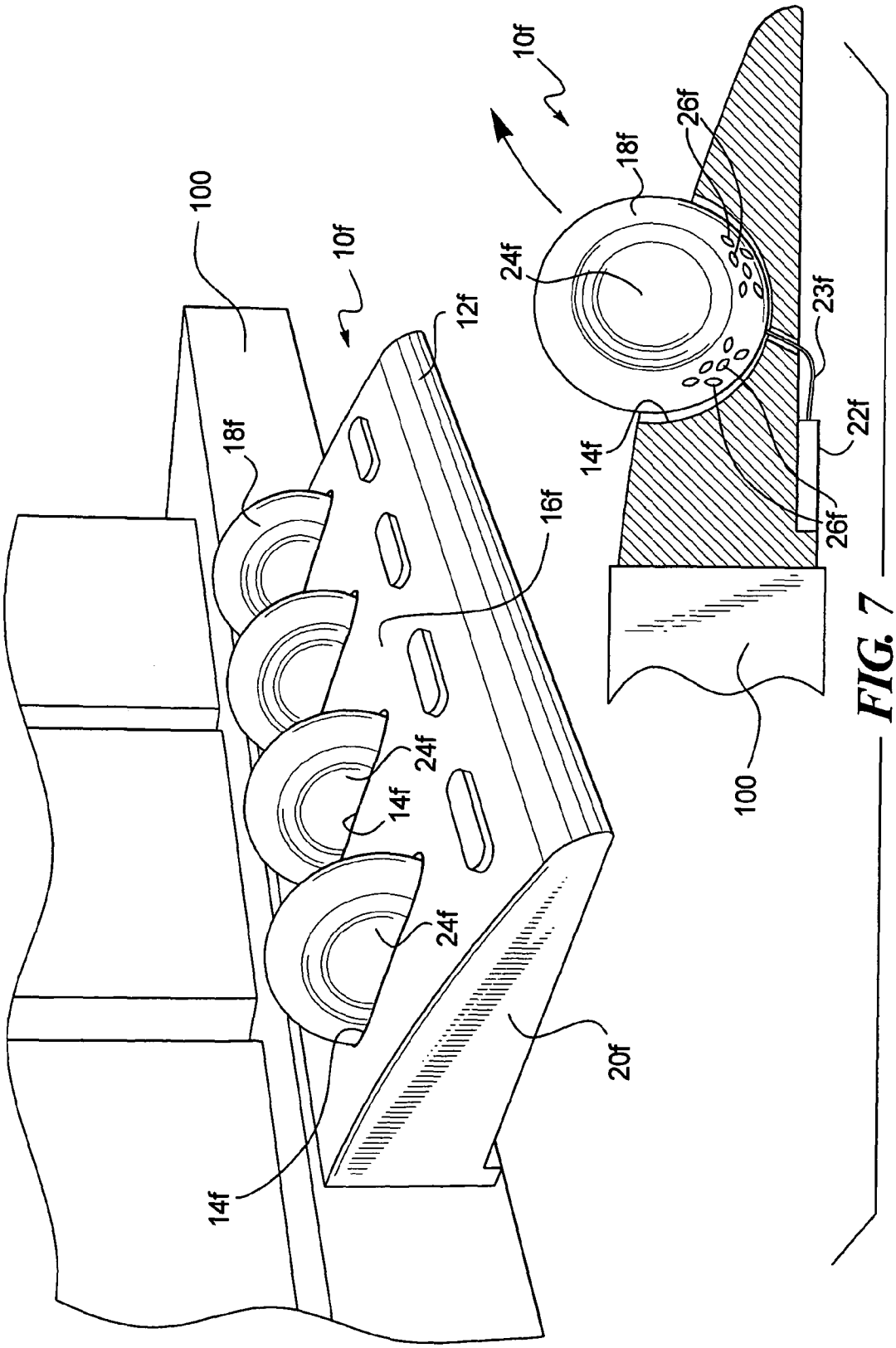
100
10f
12f
18f
16f
24f
14f
24f
14f
20f
10f
18f
26f
24f
23f
22f
14f
26f
100

FIG. 7

FIG. 8A

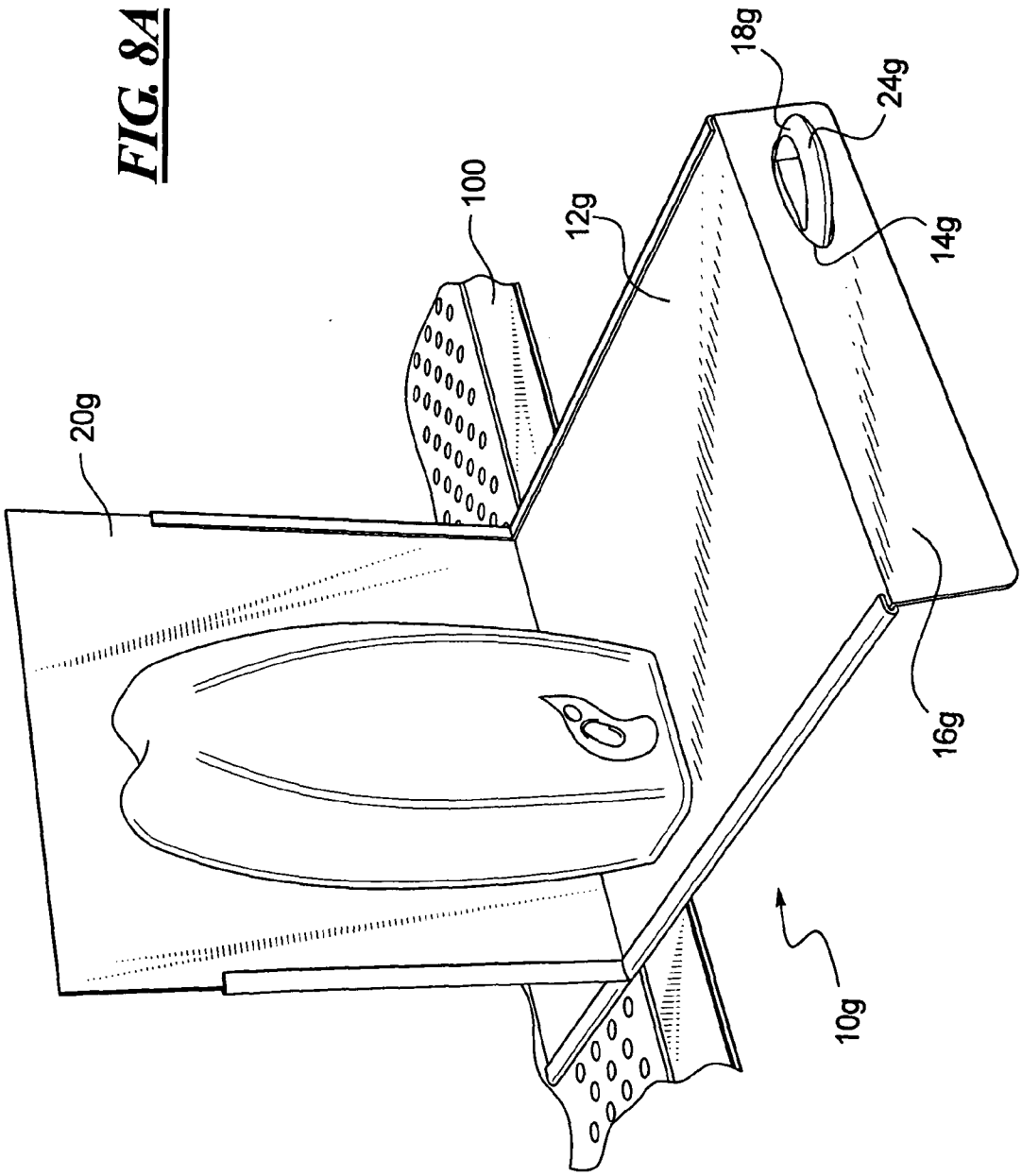

FIG. 8B

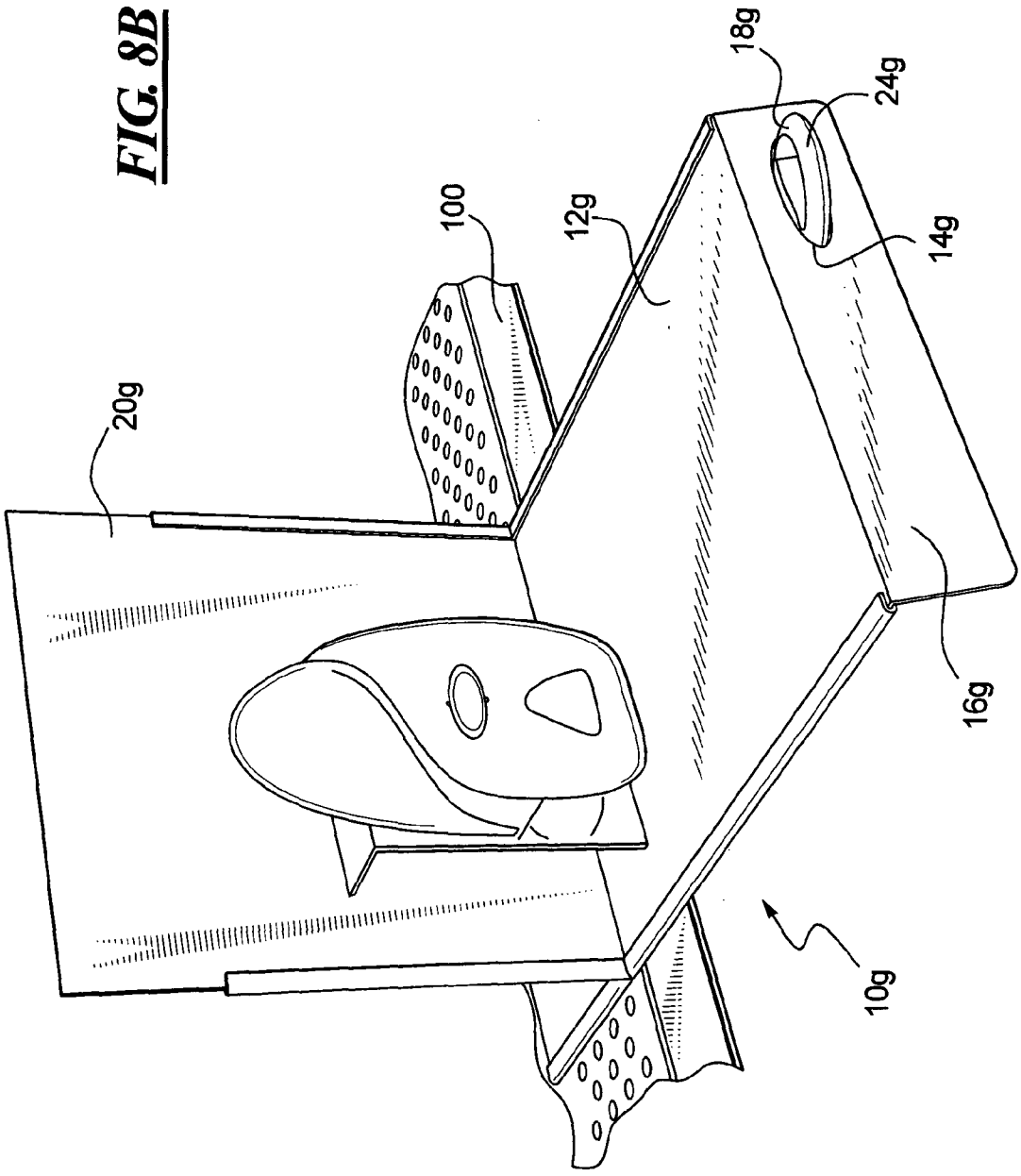

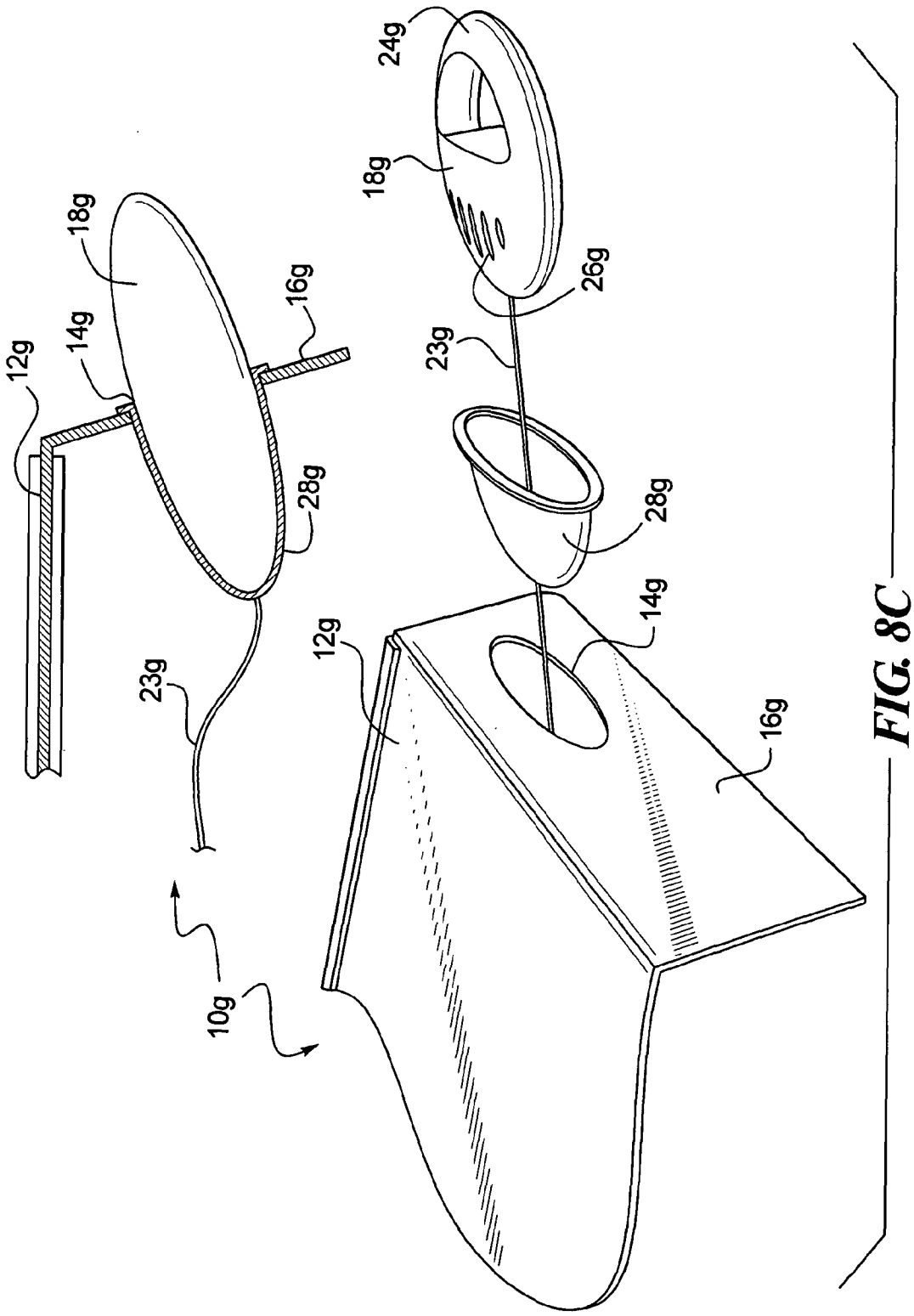

FIG. 8C

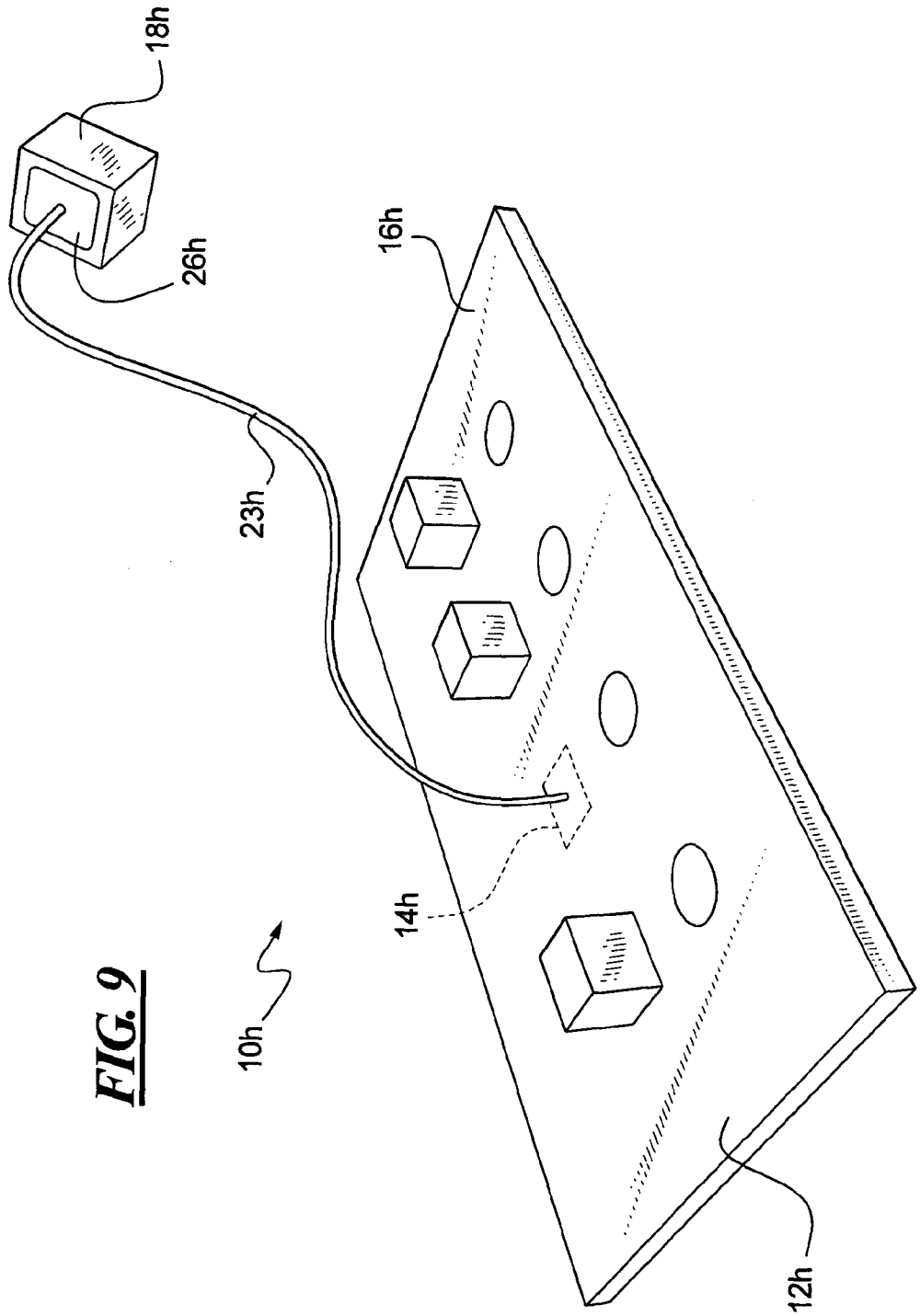

FIG. 9

INTERNATIONAL SEARCH REPORT

International application No
PCT/US2010/001905

A. CLASSIFICATION OF SUBJECT MATTER
INV. A45D40/00 A47F7/28
ADD.

According to International Patent Classification (IPC) or to both national classification and IPC

B. FIELDS SEARCHED

Minimum documentation searched (classification system followed by classification symbols)
A47F A45D

Documentation searched other than minimum documentation to the extent that such documents are included in the fields searched

Electronic data base consulted during the international search (name of data base and, where practical, search terms used)
EPO-Internal

C. DOCUMENTS CONSIDERED TO BE RELEVANT

Category*	Citation of document, with indication, where appropriate, of the relevant passages	Relevant to claim No.
X	FR 2 768 906 A1 (LUNDI MARDI MERCREDI) 2 April 1999 (1999-04-02) page 1, line 34 - page 2, line 34 page 3, line 21 - line 33 page 4, line 7 - line 10 page 4, line 25 - page 6, line 14 page 7, line 26 - line 31 page 8, line 4 - line 10; figures 1-3	1-20
X,P A,P	US 2009/294390 A1 (WESHLER) 3 December 2009 (2009-12-03) paragraph [0001] paragraph [0022] paragraph [0025] - paragraph [0031] paragraph [0033] paragraph [0035]; figures 1-4	1,6-10 11,12, 15,16,20

-/--

[X] Further documents are listed in the continuation of Box C.

[X] See patent family annex.

* Special categories of cited documents :

"A" document defining the general state of the art which is not considered to be of particular relevance

"E" earlier document but published on or after the international filing date

"L" document which may throw doubts on priority claim(s) or which is cited to establish the publication date of another citation or other special reason (as specified)

"O" document referring to an oral disclosure, use, exhibition or other means

"P" document published prior to the international filing date but later than the priority date claimed

"T" later document published after the international filing date or priority date and not in conflict with the application but cited to understand the principle or theory underlying the invention

"X" document of particular relevance; the claimed invention cannot be considered novel or cannot be considered to involve an inventive step when the document is taken alone

"Y" document of particular relevance; the claimed invention cannot be considered to involve an inventive step when the document is combined with one or more other such documents, such combination being obvious to a person skilled in the art.

"&" document member of the same patent family

Date of the actual completion of the international search	Date of mailing of the international search report
22 September 2010	29/09/2010

Name and mailing address of the ISA/	Authorized officer
European Patent Office, P.B. 5818 Patentlaan 2 NL - 2280 HV Rijswijk Tel. (+31-70) 340-2040, Fax: (+31-70) 340-3016	Jacquemin, Martin

Form PCT/ISA/210 (second sheet) (April 2005)

C(Continuation). DOCUMENTS CONSIDERED TO BE RELEVANT

Category*	Citation of document, with indication, where appropriate, of the relevant passages	Relevant to claim No.
A	EP 1 779 885 A1 (SIREROL CASABO ET AL) 2 May 2007 (2007-05-02) paragraph [0001] paragraph [0007] - paragraph [0010] paragraph [0012] paragraph [0015] - paragraph [0017] paragraph [0022] paragraph [0030]; figures 1-6	1-3,5,6, 11-14, 16,17,19

INTERNATIONAL SEARCH REPORT

Information on patent family members

International application No
PCT/US2010/001905

Patent document cited in search report	Publication date	Patent family member(s)	Publication date
FR 2768906 A1	02-04-1999	NONE	
US 2009294390 A1	03-12-2009	NONE	
EP 1779885 A1	02-05-2007	ES 2214163 A1	01-09-2004
		WO 2006003219 A1	12-01-2006