No. 873,769. PATENTED DEC. 17, 1907.

J. P. MORRIS.

FOUNTAIN PEN.

APPLICATION FILED OCT. 3, 1906.

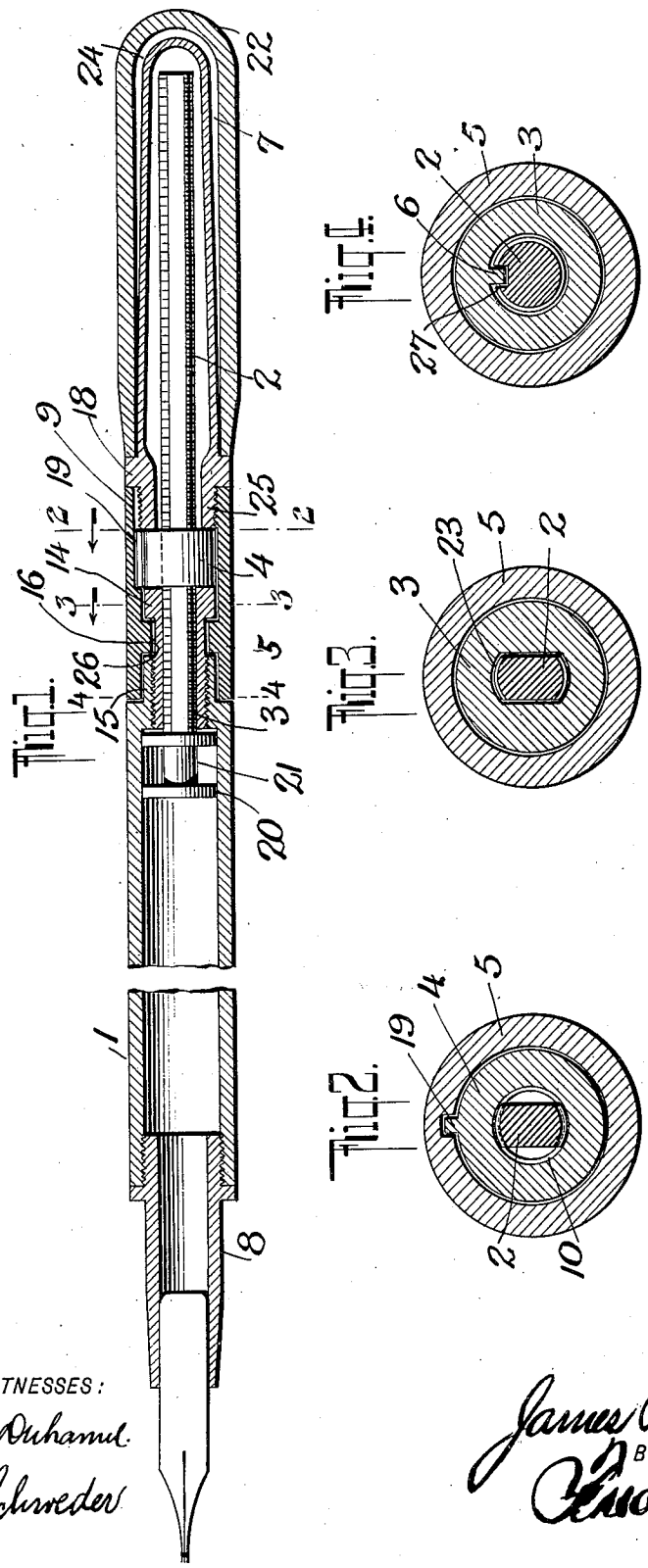

WITNESSES:

James F. Duhamel.

L. B. Schroeder

INVENTOR

James P. Morris,

BY

Fred E. Tasker.

ATTORNEY

UNITED STATES PATENT OFFICE.

JAMES P. MORRIS, OF PHILADELPHIA, PENNSYLVANIA.

FOUNTAIN-PEN.

No. 873,769. Specification of Letters Patent. Patented Dec. 17, 1907.

Application filed October 3, 1906. Serial No. 337,195.

To all whom it may concern:

Be it known that I, JAMES P. MORRIS, a citizen of the United States of America, and a resident of Germantown, Philadelphia, State of Pennsylvania, have invented certain new and useful Improvements in Fountain-Pens, of which the following is a specification.

My invention relates to a fountain pen which is capable of being readily filled by itself, and is provided with a force feed by which means a constant flow of ink is obtained without recourse to the usual method of shaking, no matter what the condition of the pen-point or the quality of the fluid used, this feed being used also for filling the barrel.

Therefore, the invention consists in the construction, arrangement and combination of parts hereinafter described and claimed.

In the accompanying drawings, illustrative of my invention, Figure 1 is a central longitudinal section of my improved fountain pen. Fig. 2 is a transverse section on line 2 2 of Fig. 1. Fig. 3 is a transverse section on line 3 3 of Fig. 1. Fig. 4 is a transverse section of a modification of the invention on line 4 4 of Fig. 1.

Similar characters of reference indicate corresponding parts throughout the different figures of the drawing.

1 designates the barrel or reservoir of my improved fountain pen. Said barrel is threaded at the extremity of its inner wall to receive the pen-holder 8, the other end being provided with an internally threaded cylindrical projection 15, in order to receive a guiding member or bushing 3. Within the barrel operates a piston 20, preferably composed of two circular disks having a central connection 21. Connected to said piston 20, is a piston screw 2, substantially rectangular in cross section as shown in Figs. 2 and 3. The piston screw guide 3 is provided with a shoulder 14, which in connection with the cylindrical projection 15 of the barrel 1 forms an annular groove 26. Through the passage in the piston-screw guide or bushing 3 which is also of substantially rectangular cross-section, passes the piston screw 2, which fits loosely enough in said corresponding passage in the bushing 3 to allow its endwise motion in the passage 23, Fig. 3, though prevented from rotation by the shape of said passage. Alongside the shoulder 14 of this piston-screw guide 3 is an interiorly-threaded nut 4, through which the piston screw 2 also passes. Said nut is provided with an exterior longitudinal tongue or key 19 which is received by a slot or groove 9 in a rotary operating member 5, thus compelling the rotation of the nut 4 with said operating member 5. The nut 4 is retained against longitudinal movements by the shoulder 14 of the piston-screw guide 3 and the projection of reduced diameter 25 on a sheath 7, which screws into the rotating member 5. Said rotating or operating member 5 is tubular in shape and provided with a slot or groove 9 for the reception of the rib 19 on the nut 4.

The end containing the slot 9 is interiorly threaded at its extremity to receive the projection of reduced diameter 25 on the sheath 7, and in its intermediate portion is provided with an interior circular rib 16 entering the groove 26, formed between shoulder 14 and the cylindrical projection 15. The exterior surface of said rotary operating member 5 lies flush with or above the surface of the barrel 1, and at the end containing the interior threads is immediately adjacent to an annular shoulder 18 on the sheath 7. Said sheath 7 is provided with said shoulder 18 adjacent to the threaded end of the rotary operating member 5 and is also provided with a projection of reduced diameter 25 screwing into said rotary member 5. Said sheath 7 is made sufficiently long to house the piston-screw 2 even at the completion of its backward stroke, and tapers toward a rounded end 24 in order to carry an outer cap 22, which is of the usual form and attachable in the usual manner, said cap being employed to cover the pen-point when the pen is not in use.

In a modification of my invention, shown in Fig. 4, the piston-screw 2 is of circular cross section and is provided with a groove 6 to receive the longitudinal rib 27 on the bushing 3 which prevents the rotation of said piston-screw in regard to said bushing.

My improved fountain pen is operated as follows: Supposing the reservoir to be filled with writing fluid and the piston 20 to be in the position shown in Fig. 1, the user may, by turning the operating member 5 in one direction, cause the interiorly-threaded nut 4, which is held stationary in regard to said operating member 5 by the groove or rib 19, to be rotated with said operating member 5, said interiorly threaded nut 4 causing the piston-screw 2 to move toward the pen-point

said piston-screw 2 being held against rotation relative to the piston rod guide or bushing 3 by means of the substantially rectangular-shaped opening therein. Thus on the outstroke of the piston-screw 2, the ink is fed toward the point in a steady flow and without necessitating the usual shaking, while on the back stroke, by a reverse movement of the operating member 5, the pen having been inserted in an ink receptacle, the piston 20 in its retreat creates a suction sufficient to draw up the ink into the reservoir without the necessity of taking the pen apart.

This improved fountain pen is also capable of being readily taken apart and cleaned. Heretofore it has been thought impossible to eject sticky or other like inferior inks which with the excess of ink collecting in the previous self-filling and automatic-feeding pens has resulted in much annoyance to the users of this style of pen. These objectionable features are entirely obviated by the use of a piston-screw as arranged in my invention and herein described.

Having thus explained my invention I claim as new and desire to secure by Letters-Patent:

1. In a fountain pen, the combination of a barrel, a piston fitting the cavity within the barrel, a stem connected with the piston and screw-threaded, a bushing closing the end of the barrel, the piston stem extending through the bushing and being held from rotation therein, a nut for engaging with the threaded part of the stem for operating the piston, the bushing constituting an abutment to prevent longitudinal movement of the nut in one direction, means for turning the nut, and means connected with the turning means and operating as an abutment to prevent longitudinal movement of the nut in the other direction, substantially as set forth.

2. The combination of a barrel, a bushing mounted in one end thereof and provided with guide-ways, a piston, a screw connected thereto and slidable in said guide-ways, a nut for operating the screw, a shoulder on the outer end of the bushing so arranged that there is formed an annular groove between the shoulder and the end of the barrel, a ring adapted to rotate in said groove, and connections between the ring and the nut for rotating the latter to operate the screw, substantially as set forth.

3. In a fountain pen, the combination of a barrel, a piston and a piston screw, a bushing mounted in one end of the barrel, formed with an exterior annular recess, a rotating member having a rib engaging with said recess, a nut mounted within the said member and rotatable therewith for operating the piston and piston screw, and a sheath covering the end of the piston screw and connected with the rotatable member and arranged to operate as an abutment for the nut to prevent the longitudinal movement thereof in one direction, substantially as set forth.

4. In a fountain pen, a barrel, a bushing, a piston-screw guide having an annular shoulder, a reciprocating piston-screw, a sheath housing said piston-screw and having a threaded projection, a rotary operating member, an interiorly-threaded nut, a means for attaching said nut to said operating member, a means for preventing longitudinal movement of said nut in regard to said operating member.

5. In a fountain pen, a barrel, a projection therefrom, a piston-screw guide bushing, having an annular shoulder, an interiorly-threaded nut having an exterior rib, a piston-screw, and a rotary operating member having a groove to receive said rib, said operating member having an interior rib received in a groove formed by the shoulder of said bushing and the projection from the barrel.

Signed at Germantown, Pa., this 14th day of April 1906.

JAMES P. MORRIS.

Witnesses:
FRED W. MORRIS,
M. J. WALLACE.