Oct. 30, 1945. H. L. HARTZELL 2,388,054

ELECTRICAL FILTER

Filed March 15, 1943

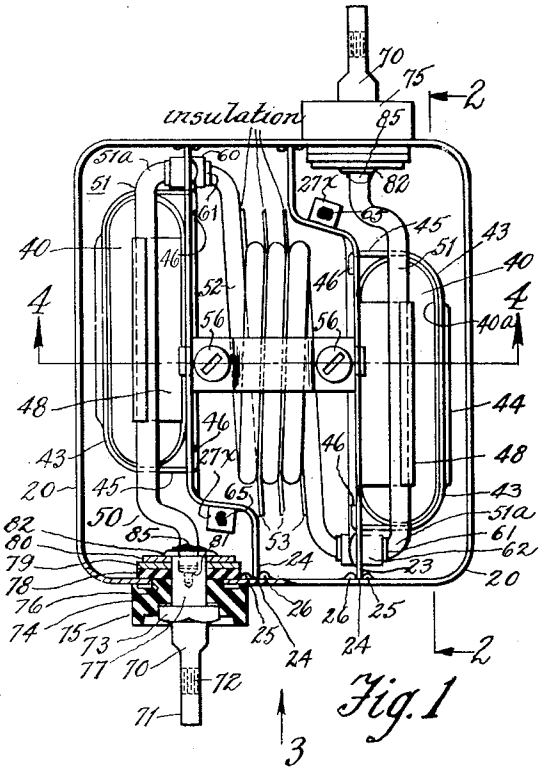

Fig. 1

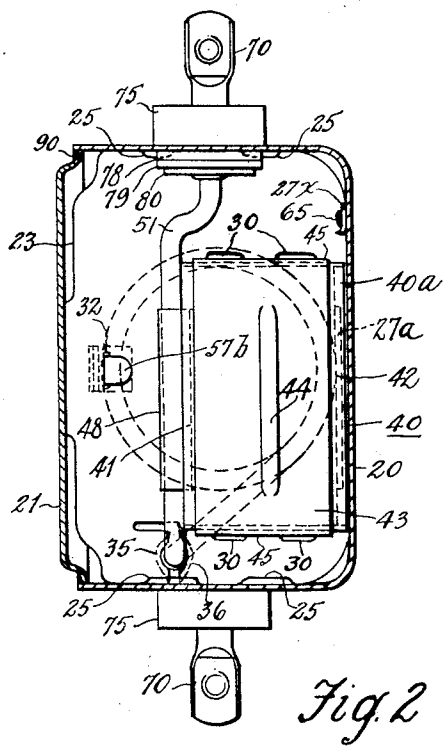

Fig. 2

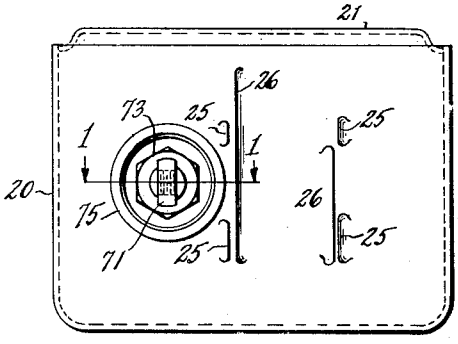

Fig. 3

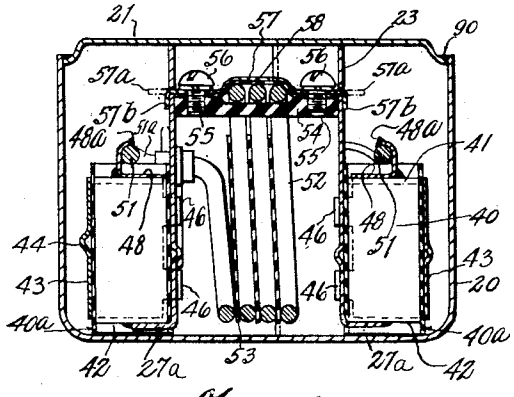

Fig. 4

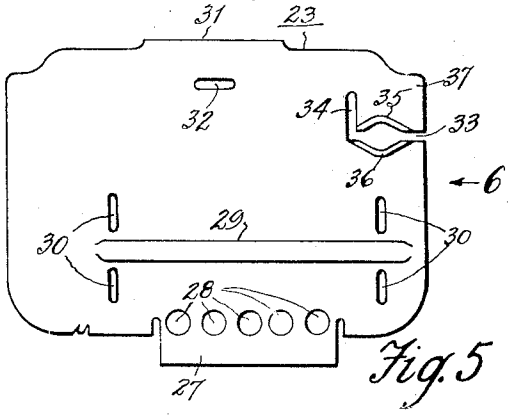

Fig. 5

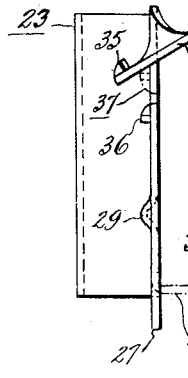

Fig. 6

INVENTOR
Herman L. Hartzell
BY
Spencer Hardman & Fehr
his ATTORNEY

Patented Oct. 30, 1945 2,388,054

UNITED STATES PATENT OFFICE

2,388,054

ELECTRICAL FILTER

Herman L. Hartzell, Anderson, Ind., assignor to General Motors Corporation, Detroit, Mich., a corporation of Delaware

Application March 15, 1943, Serial No. 479,223

4 Claims. (Cl. 178—44)

This invention relates to electrical filters for suppressing high frequency currents which would otherwise interfere with the operation of adjacent radio apparatus. It is an object of the invention to provide a filter unit which may be connected, for example, in the circuit between the generator and the storage battery and which provides means for filtering high frequency currents and which provides a connection for conducting the filter currents to ground. The filter unit comprises a choke coil and condensers connected in π relation. The coil and condensers are located within a metal box having metal cover. Opposite sides of the box insulatingly support a terminal with which the ends of a bare copper wire are connected. An intermediate portion of the wire provides the choke coil. Other portions of the wire extending parallel to the side walls of the box are attached respectively to conducting straps of the condenser. Two metal partitions divide the box into three compartments for housing the two condensers and the choke coil respectively. The partitions, the condensers and the coil are assembled together and this subassembly is placed within the box which is provided internally with means for engaging edges of the partitions so as to prevent lateral movement thereof. The ends of the bare wire are connected with the terminals carried by the box and the partitions, to which condenser grounded terminals are attached, are connected with the box by solder so that the box provides means for conducting high frequency currents to ground. The cover is assembled with the box with its under surface in engagement with the partitions and its edges in engagement with the side walls of the box and the cover is connected with the box by soldering. The filter thus provides a complete shielding of the condensers and choke coil and for individual shielding of these elements.

Further objects and advantages of the present invention will be apparent from the following description, reference being had to the accompanying drawing wherein a preferred embodiment of the present invention is clearly shown.

In the drawing:

Fig. 1 is a plan view of the filter unit with the cover removed. That portion of Fig. 1 shown in section is a fragmentary sectional view on line 1—1 of Fig. 3.

Fig. 2 is a sectional view on line 2—2 of Fig. 1.

Fig. 3 is a side view looking in the direction of the arrow 3 of Fig. 1.

Fig. 4 is a sectional view on line 4—4 of Fig. 1.

Fig. 5 is a side view of one of the partitions and

Fig. 6 is an end view thereof looking in the direction of arrow 6 of Fig. 5.

The metal box 20 is provided with a metal cover 21 which, when assembled with the box as shown in Fig. 2, engages two partitions 23 shown in detail in Figs. 5 and 6. The partitions 23 have their side edges received by grooves or notches 24 which are provided by tanks 25 and 26 formed by partial shearing and pressing the material inwardly. Each partition 23 is provided with a flange 27. The portion of the flange 27 which joins the main portion of the partition is weakened by punching out holes 28 thereby facilitating the bending of the flange 27 as indicated at 27a Fig. 6. As viewed in Fig. 5 the partition 23 is provided with a horizontal stiffening rib 29 adjacent the end of which there are pairs of slots 30. Near the top edge 31 which is to be engaged by the cover 21 there is a horizontal slot 32. Leading from one side edge of the partition there is a notch including the horizontally extending portion 33 and vertically extending portion 34. The edges defining the notch portion 33 are provided with flanges or lips 35 and 36. Thus a portion 37 is provided which can be readily bent away from the plane of the main portion as indicated at 37a thereby enlarging the width of the notched portion 33.

Each partition 23 provides a support for a condenser section or winding 40 having its two metal foils so wound that one margin of each foil is exposed at an end of the condenser as indicated by numerals 41 and 42. The condenser 40 is surrounded by a non-conducting wrapper 40a. The condenser winding 40 is attached to the partition 23 by a U-shaped metal strap 43 having a stiffening rib 44 and having its end portion 45 provided with tangs 46 which are pushed thru the vertical slots 30 of the partition and are bent over as shown in Fig. 1. The tab 27 of a partition 23 is bent over into a notch of the wrapper 40a and against the foil margin 42 and is electrically connected therewith by soldering. The upper margin 41 is soldered to a conducting strap 48. In this manner, two partition and condenser subassemblies are provided.

A bare copper wire 50 is formed as shown so that it has two parallelly extending portions 51 and an intermediate choke coil 52. The turns of the coil 52 are spaced by insulating plates 53 retained by frictional engagement with the coil turns which have been sprung apart to permit inserting the insulating plates. The coil 52 is

attached to a supporting bridge comprising a nonconducting strap 54 of molded insulating material provided with threaded holes 55 for receiving screws 56 which attach a metal strap 57 and an intermediate strip of insulating paper 58 which insulates the coil 52 from the strap 57. Thus there is provided a subassembly of the wire 50 with its choke coil 52 and the bridge member provided by parts 54 and 57.

The condenser and partition subassembly are now assembled with the wire and bridge subassembly. Before this is done the bendable portions 37 of the partitions 23 must be bent as shown in Fig. 6, in order to open up the notches 33 so that the portions 51*a* of the wire 50 which have been covered with wrappings of insulation 60 and 61 may be passed into the notches 33. The bridge comprising members 54 and 57 is placed between the partitions 23; and the tangs 57*a* of the strap 57, which originally had extended horizontally as indicated by the dot-dash lines in Fig. 4, are passed into the slots 32 of the partition. The partitions 23 are pushed against the end edges of the non-conducting plate 54 and the tangs 57*a* are bent into positions 57*b* (Fig. 4). Since the end edges of bridge 54 are parallel, the partitions will then be held in substantially parallel relation. Then the portions 37 of the partitions 23 are bent back again toward their original location so that the insulating members 60 surrounding the wire portions 51*a* will be squeezed between the lips 35 and 36 provided by the partitions. Thus there is provided the assembly of the choke coil and bridge subassembly with the two subassembies of partitions and condensers, thus forming a subassembly of partitions, coil and condensers. The condenser terminal straps 48 are not attached to the wire portions 51 until after this subassembly is assembled with the case and terminal assembly.

The case and terminal subassembly comprises the case 20 and metal terminals 70 insulatingly supported by the case. Each terminal 70 is provided with a flat portion 71 having a threaded hole 72 for receiving a screw by which a terminal clip on the end of the wire may be attached to the terminal 70. The terminal 70 is provided with a hexagonal flange 73 received by a similar recess 74 in a non-conducting block 75 having a square boss 76 received by a square hole in a side wall of the case 20. Terminal 70 has a shank 77 passing thru a non-conducting washer 78 and metal washers 79 and 80. The inner end of the shank 77 has a central recess 81 to provide a socket for receiving an end of wire 50 and to facilitate the riveting of shank 77 (as shown at 82) against the metal washer 80 thus retaining the assembly of the terminal 70 and the parts by which it is insulatingly supported by the case 20. Thus the assembly of case and insulating terminals is provided.

Before the case and terminal subassembly receives the coil, condenser and partition subassembly, the wire portions 51 have been bent so that the ends may clear the riveted portions 82 of the terminals 70. During the assembling of these two subassemblies, the partition edges are caused to enter the grooves 24 between the tangs 25 and 26 and the partitions 23 are pushed down until the tabs 27*x* thereof engage the bottom wall of the case 20. The tabs 27*x* are electrically connected with the bottom wall by solder 65 which is flowed thru holes in the tabs. Then the ends of the wire 50 are inserted into the recesses 81 provided by the shanks 73 of the terminals 70; and the wire portions 51 are straightened so that the wire ends will enter a substantial distance into the recesses 81 and the electrical connections are completed by soldering as indicated at 85 (Fig. 1). Then the condenser terminal straps 48 are bent around the wire portions 51 and are soldered at 48*a* (Fig. 4). The cover 21 is then inserted within the open end of the box and is caused to engage the portions 31 of the partition 23; and the cover is joined to the box by solder indicated at 90.

Each of the three elements of the filter, namely, the two condensers and the choke coil are individually shielded from each other and the entire filter is shielded by the box and cover. The partitions 23 are instrumental in effecting the individual shielding of the condensers and choke coil and serve also as supports for these elements to hold them in spaced relation with respect to each other and the walls of the box and cover.

The filter unit is adapted for connection between an electric generator and its load or work circuit. The filter case provides a connection between the filter condensers and ground. To this end, the case may be mounted upon the frame of the generator or other source of the high frequency disturbance or it may be mounted in a grounded apparatus box associated with the generator or other source. In the case of a generator, the apparatus box usually contains devices for regulating the voltage and current of the generator and for housing the automatic switches which disconnect the generator from the storage battery when the generator voltage decreases below battery voltage.

While the embodiment of the present invention as herein disclosed, constitutes a preferred form, it is to be understood that other forms might be adopted, all coming within the scope of the claims which follow.

What is claimed is as follows:

1. An electrical filter unit comprising a subassembly of a metal box and terminals insulatingly supported thereby; a sub-assembly of spaced metal partitions, a choke coil located between the partitions and insulatingly supported thereby and having its leads located adjacent the sides of the partitions remote from the choke coil, condensers each supported by a partition and located adjacent a choke coil lead and having one foil electrically connected with a partition and the other foil electrically connected with a lead, the assembling of the second sub-assembly within the first subassembly locating the lead ends adjacent the terminals; means for connecting the leads with the terminals; and a metal cover attached to the box and engaging the metal partitions.

2. An electrical filter unit comprising a sheet metal housing, spaced sheet metal partitions engaged by opposite walls of the housing to prevent lateral movement of the partitions, said partitions dividing the interior of the housing into three chambers, each partition having a flange bent from the normal plane of the partition and extending into an end chamber; condensers each supported by a flange and having a foil electrically connected thereto; a choke coil located between the partitions and insulatingly supported thereby, said choke coil having leads extending into the end chambers and electrically connected with other foils of the condensers; terminals insulatingly supported by the housing and electrically connected respectively, with the lead ends of the

choke coil; and a sheet metal cover for closing the housing and contacting the partitions.

3. An electrical filter unit comprising a sheet metal housing; a plurality of sheet metal plates slidably supported within the housing and dividing the interior of the housing into a plurality of chambers, each partition provided with a flange portion, a condenser unit supported upon each flange portion and having a foil electrically connected thereto; a choke coil insulatingly supported between a pair of partitions and having each and extending into different chambers and electrically connected with other foils of the condensers; terminals insulatingly supported by the housing; means for electrically connecting the terminals, respectively, with the choke coil ends; and a sheet metal cover attached to the housing.

4. An electrical filter unit comprising a subassembly consisting of a rectangular box and two terminals insulatingly supported, respectively, by opposite side walls of the box, said side walls having provisions for receiving the edges of partition members to prevent lateral movement thereof; a subassembly consisting of two spaced, metal partition members, a choke coil located between the partitions and having its leads extending, respectively, through the partitions and insulatingly supported thereby, said leads extending in opposite directions from their points of support by the partitions and along the remote sides of the partitions and toward remote end edges thereof, means for holding the partitions in spaced relation and for insulatingly supporting the choke coil, and two condensers each supported by a partition at the side thereof remote from the coil and each having one foil connected with the supporting partition and a foil connected with a choke coil lead, the assembling of the second subassembly within the first subassembly locating the lead ends adjacent the terminals; means for connecting the leads with the terminals, and means for electrically connecting the partitions with the box and including a metal cover for the box which, when assembled with the box, engages the partitions.

HERMAN L. HARTZELL.