March 22, 1960 W. C. HASSELHORN ET AL 2,930,021

ELECTRIC CONNECTOR

Filed July 31, 1956

Fig. 1.

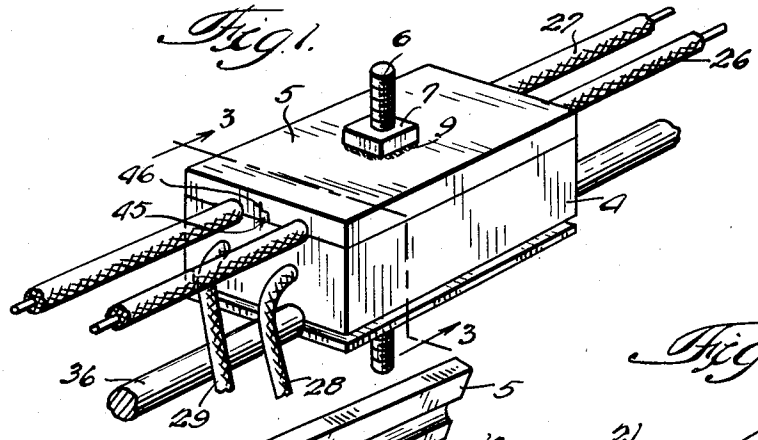

Fig. 4.

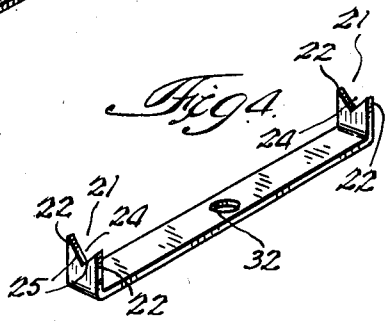

Fig. 2.

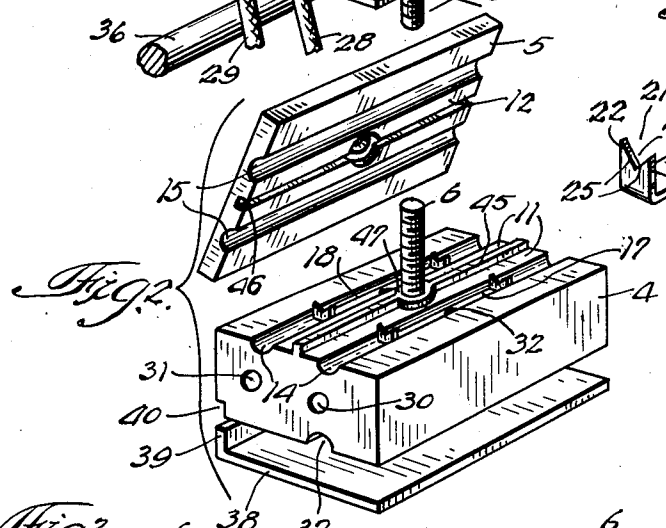

Fig. 3.

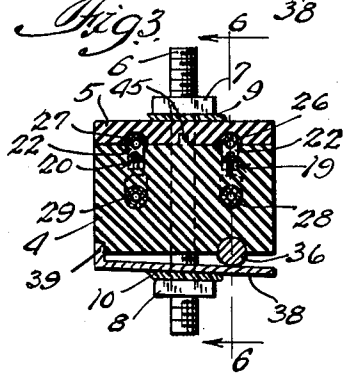

Fig. 6.

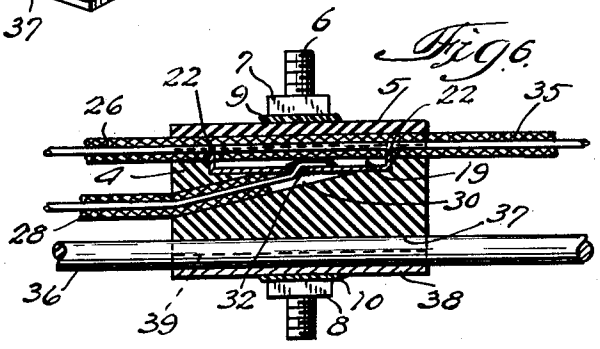

Fig. 5.



INVENTORS.
Walter C. Hasselhorn.
and John S Baker.
BY
Thiess, Olson, Mecklenburger,
Von Holst, & Coltman.
Attys.

United States Patent Office 2,930,021 Patented Mar. 22, 1960

2,930,021

ELECTRIC CONNECTOR

Walter C. Hasselhorn, Evanston, and John S. Baker, Skokie, Ill., assignors, by mesne assignments, to Cook Electric Company, Chicago, Ill., a corporation of Delaware

Application July 31, 1956, Serial No. 601,148

5 Claims. (Cl. 339—99)

The present invention relates to electric connectors and more particularly to an improved form of connector for connecting service wires to line wires.

An object of the invention is to provide a connector that will conveniently and quickly connect a pair of service wires to a pair of insulation-covered line wires without requiring the line wires to be cut or the insulation covering to be stripped.

A still further object of the invention is to provide a simple and inexpensive device capable of effecting a simple and inexpensive electrical connection between line wires and service wires, the connection being of a kind that will not disturb or injure the line wires and will leave the latter intact at any time it is desirable to disconnect the service wires.

A still further object of the invention is to provide an electric connector of the type described which may be easily and readily clamped at any point or location over and upon line wires and effect a firm and quick connection with one or more service lines.

These and other objects of the invention will be apparent from the following description when taken in connection with the drawing which forms a part hereof.

In the drawing:

Figure 1 is a view in perspective of an electric connector embodying the invention to show how it may be clamped upon and over line wires and an electrical connection established with a pair of service wires without cutting the line wires or stripping or otherwise destroying the insulation covering the line wires;

Fig. 2 is an exploded view of the parts of the connector;

Fig. 3 is a transverse section taken along line 3—3 of Fig. 1 and looking in the direction of the arrows;

Fig. 4 is an enlarged perspective view of one of the contactors embedded in the body portion of the connector;

Fig. 5 is a view partly in elevation and partly in cross section to show the manner in which the piercing means of the contactors pierce the insulation covering of the line wires to engage the same firmly without destroying the insulation covering; and

Fig. 6 is a longitudinal section of the connector taken along line 6—6 of Fig. 3 and looking in the direction of the arrows.

The electric connector illustrated in the drawing as one preferred embodiment of the invention comprises complementary members 4 and 5 that serve essentially as a body and as a cover, respectively, held clamped together by a bolt 6, or like fastening member, extending through both members 4 and 5 preferably at the center and made fast by nuts 7 and 8 and suitable lock washers 9 and 10.

It will be observed that the mating faces 11 and 12 of members 4 and 5 are grooved at 14 and 15, respectively, the arrangement of the grooves being optional because one or both of these faces may carry the grooves.

When the grooves are in body member 4, contactors 17 and 18 are preferably embedded in, say, recesses 19 and 20 formed in this body member and opening into the grooves. Each contactor member has piercing means designated broadly as 21 at each end, as shown in detail in Fig. 4. These piercing means 21 comprise teeth in sets of pairs 22 spaced with a V formation 24 between, with or without the inside edges 25 of the teeth sharp as may be desired, so that line wires 26 and 27 may rest in the V opening between the teeth and be forced against the edges 25.

Service wires 28 and 29 are preferably accommodated in passages 30 and 31 drilled or otherwise formed in body part 4, say, on a slant, so as to open into recesses 19 and 20. The center of contactors 17 and 18 are perforated in order that solder may be used to secure the ends of service wires 28 and 29 permanently to the contactors. The service wires 28 and 29 are preferably pushed through passages 30 and 31 until their ends lie in recesses 19 and 20. This soldered connection is indicated at 32.

From the foregoing description it will be apparent that the present connector may be mounted or clamped about and over line wires 26 and 27 without cutting the line wires and without stripping the insulation covering to make electrical contact with service wires 28 and 29. The threads at the ends of bolt 6 can be upset so that nuts 7 and 8 cannot be backed off, this advantageously, in view of the arrangement and construction of the parts, preventing any of these parts from being separated completely from the assembly and lost. As observed in Figs. 1 and 2, cover 5 may be lifted far enough along bolt 6 to permit line wires 26 and 27 to be slipped into grooves 14 in body 4. This cover will then be dropped down upon body 4, and the nut 7 threaded downwardly upon cover 5 is tightly clamped against body 4, the mating faces 11 and 12 being brought together, if need be, as shown in Fig. 1. This tightening action of cover 5 against body 4 will cause teeth 22 to pierce insulation 35 of line wires 26 and 27 and bring the edges 25 of teeth 22 up and against the periphery on both sides of the wires as shown in detail in Fig. 5. By providing a V space 24 between the teeth 22, the latter will cradle the wires therebetween and thus firmly grip the wires and provide a firm contact or engagement. Noises or disturbances over the line, if the connector is used in communications, for example, will therefore be eliminated. Vibration or swinging movements of line wires 26 and 27 often in their suspended position of use will likewise not affect the firm electrical contact between both sets of wires.

Quite often rural distribution wires will have a supporting wire like that indicated at 36 in Fig. 1. In such case, it may be desirable to support the connector on wire 36. The bottom of body 4 may have a groove 37 running lengthwise therein, while a clamping plate 38 may be carried on bolt 6 and have a flange 39 that will ride in a groove 40 in base 4. Without completely removing clamping plate 38, the same can be backed down along bolt 6 enough to allow wire 36 to be slipped into groove 37. Clamping plate 38 can then be brought tightly against the bottom of base 4 to hold the connector assembly tightly supported on supporting wire 36 by threading nut 8 tightly upwardly against the assembly.

It is pointed out that the connector herein disclosed may be easily and readily attached at any point along line wires 26 and 27 without mutilating them in any way. The piercing of the insulation by teeth 22 does not destroy the insulation. The connector may be disconnected at any time and relocated or completely removed from line wires 26 and 27 without requiring their re-

placement. Thus, service connections can be quickly and easily made at will and with minimum expense. The connector may be reused if desired because parts 4 and 5 may be made of insulating material that will not be affected by the elements and will last for a long time. The electrical connections between the line wires and the service wires are located midway of the ends of the body and cover and are protected against the elements. Moisture may be effectively excluded from between the mating faces 11 and 12 by applying a plastic sealing material at the time of clamping the cover 5 upon body 4 after line wires have been inserted in grooves 14.

In order to provide maximum creepage surface between grooves 14, a center rib 45 may be provided centrally along face 11 of body 4 and lie in a groove 46 in cover 5, a corresponding enlargement 47 being formed on this rib 45 about bolt 6.

Without further elaboration, the foregoing will so fully explain the character of our invention that others may, by applying current knowledge, readily adapt the same for use under varying conditions of service, without eliminating certain features, which may properly be said to constitute the essential items of novelty involved, which items are intended to be defined and secured to us by the following claims.

We claim:

1. An electric connector comprising a body portion and a cover, both forming complementary members having parallel grooves for receiving insulation-covered conductor cords, said body portion having two exterior grooves in its bottom face, a supporting mount for one of said exterior grooves, a clamping plate for holding said supporting mount in said exterior groove, a flange on said plate for pivotally riding in the other of said exterior grooves, a fastening bolt extending through said body portion, cover and clamping plate tightly to hold said parts together, the assembly being carried by said supporting mount and with the conductor cords clamped in said parallel grooves of said body and said cover, and means for receiving a pair of service wires in one of said complementary members for electrical connection to said conductor cords.

2. An electric connector comprising a body portion and a cover, both forming complementary members having parallel grooves for receiving insulation-covered conductor cords, said body portion having two exterior grooves in its bottom face, a supporting mount for one of said exterior grooves, a clamping plate for holding said supporting mount in exterior groove, a flange on said plate for pivotally riding in the other of said exterior grooves, a fastening bolt extending through said body portion, cover and clamping plate tightly to hold said parts together, the assembly being carried by said supporting mount and with the conductor cords clamped in said parallel grooves of said body and said cover, said body having recesses formed in the base of said parallel grooves, a contactor strip in each recess, means on said contactor strips for piercing said insulation-covered conductor cords, said body having a pair of passages entering the same from one face thereof and opening into said recesses, said passages being adapted to receive service wires for connection to said contactor strips.

3. An electric connector comprising a body portion and a cover, both forming complementary members having parallel grooves for receiving insulation-covered conductor cords, said body portion having two exterior grooves in its bottom face, a supporting mount for one of said exterior grooves, a clamping plate for holding said supporting mount in said exterior groove, a flange on said plate for pivotally riding in the other of said exterior grooves, a fastening bolt extending through said body portion, cover and clamping plate tightly to hold said parts together, the assembly being carried by said supporting mount and with the conductor cords clamped in said parallel grooves of said body and said cover, said body having recesses formed therein, a contactor strip for each recess, means on said contactor strips for piercing said insulation-covered conductor cords, said body having passages entering the same from one face thereof and opening into said recesses, said passages being adapted to receive service wires for connection to said contactor strips.

4. An electric connector comprising a body portion and a cover, both forming complementary members having parallel grooves for receiving insulation-covered conductor cords, said body portion having an exterior groove in its bottom face, a supporting mount adapted to lie in said exterior groove, a clamping plate for slidably holding said body and cover upon said supporting mount, a fastening bolt extending through said body portion, cover and clamping plate tightly to hold said parts together, the assembly being carried by said supporting mount with the conductor cords clamped in said parallel grooves of said body and said cover, and means for receiving service wires in said body portion for electrical connection to said conductor cords, said means including electrical contactor strips lying in said parallel grooves for a fixed connection to said service wires.

5. An electric connector comprising a body portion and a cover, both forming complementary members having parallel grooves for receiving insulation-covered conductor cords, said body portion having an exterior groove in its bottom face, a supporting mount adapted to lie in said exterior groove, a clamping plate for slidably holding said body and cover upon said supporting mount, a fastening bolt extending through said body portion, cover and clamping plate tightly to hold said parts together, the assembly being carried by said supporting mount with the conductor cords clamped in said parallel grooves of said body and said cover, said body having recesses formed therein, a contactor strip for each recess, means on said contactor strips for piercing said insulation-covered conductor cords, said body having passages entering the same from one face thereof and opening into said recesses, said passages being adapted to receive service wires for connection to said contactor strips.

References Cited in the file of this patent

UNITED STATES PATENTS

1,290,153	Fitzpatrick	Jan. 7, 1919
1,798,815	Shepard	Mar. 31, 1931
2,408,045	Cottrell	Sept. 24, 1946
2,567,783	Richardson	Sept. 11, 1951

FOREIGN PATENTS

661,480	Great Britain	Mar. 3, 1949