May 2, 1967 J. H. MARTIN, JR 3,317,734

DEFECT DETECTOR AND STOP MOTION CONTROL SYSTEM

Filed Jan. 15, 1964 4 Sheets-Sheet 1

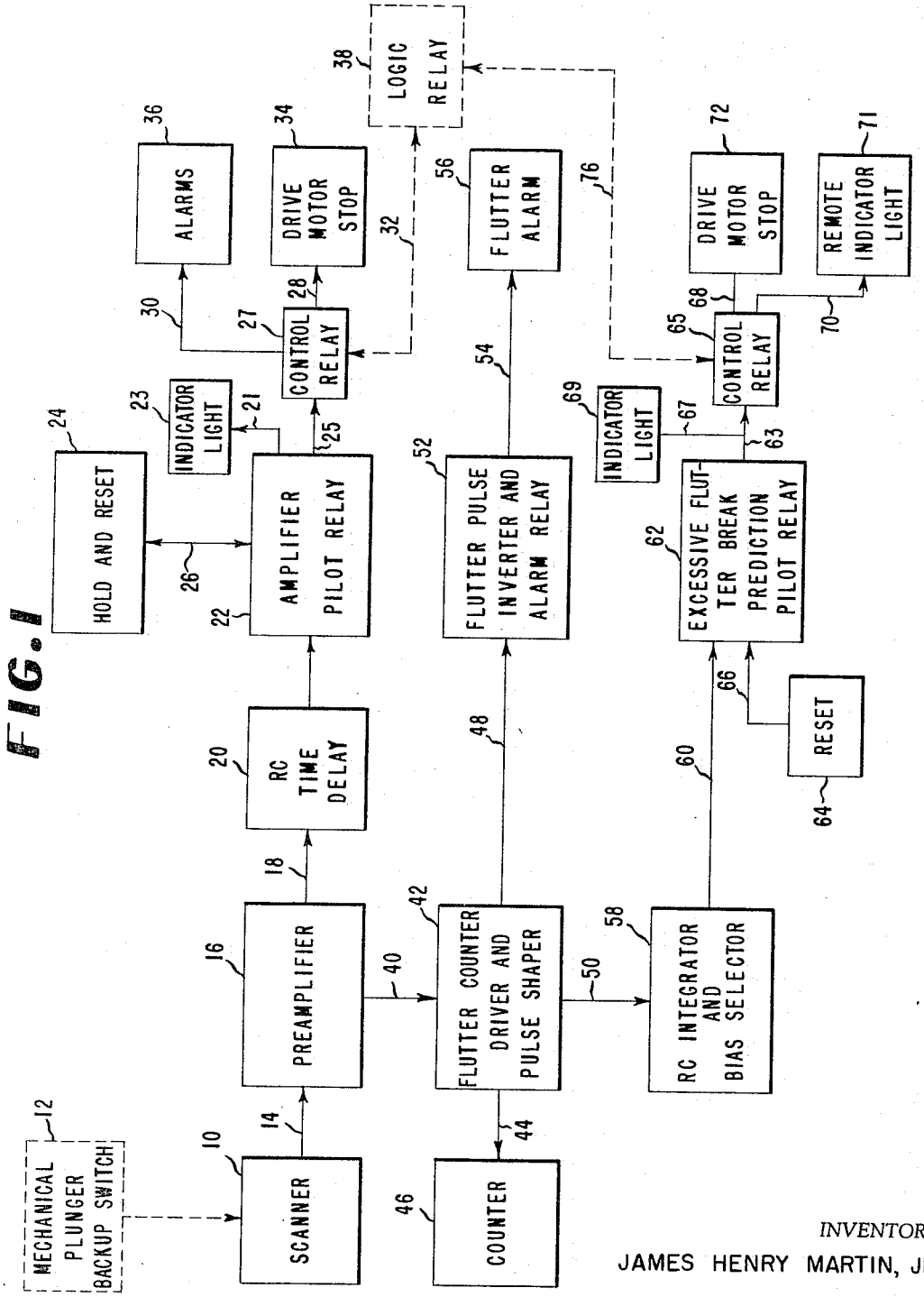

FIG. 1

INVENTOR
JAMES HENRY MARTIN, JR.

BY Frank R. Ortolani

ATTORNEY

DEFECT DETECTOR AND STOP MOTION CONTROL SYSTEM

Filed Jan. 15, 1964 4 Sheets-Sheet 2

FIG. 2

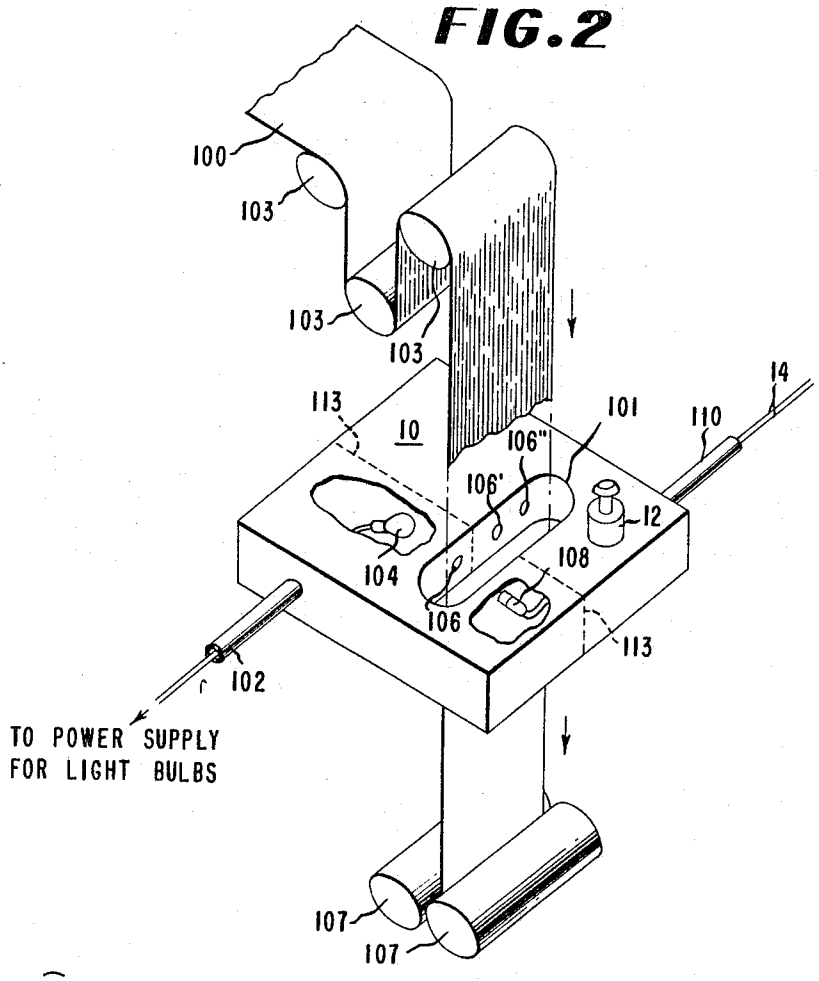

FIG. 5

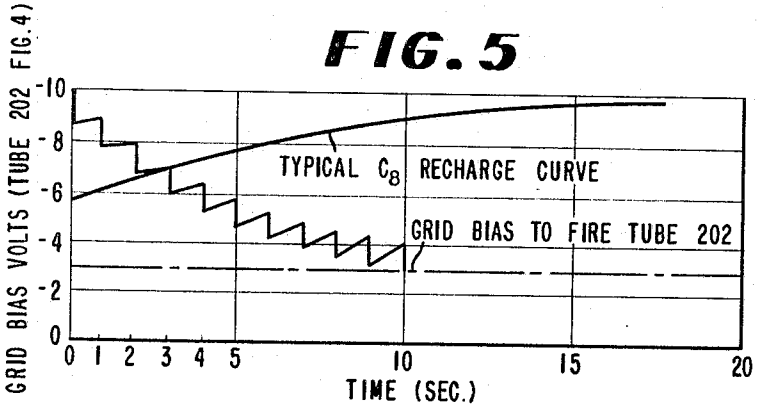

INVENTOR
JAMES HENRY MARTIN, JR.

BY Frank R. Ortolani

ATTORNEY

May 2, 1967 J. H. MARTIN, JR 3,317,734

DEFECT DETECTOR AND STOP MOTION CONTROL SYSTEM

Filed Jan. 15, 1964 4 Sheets-Sheet 3

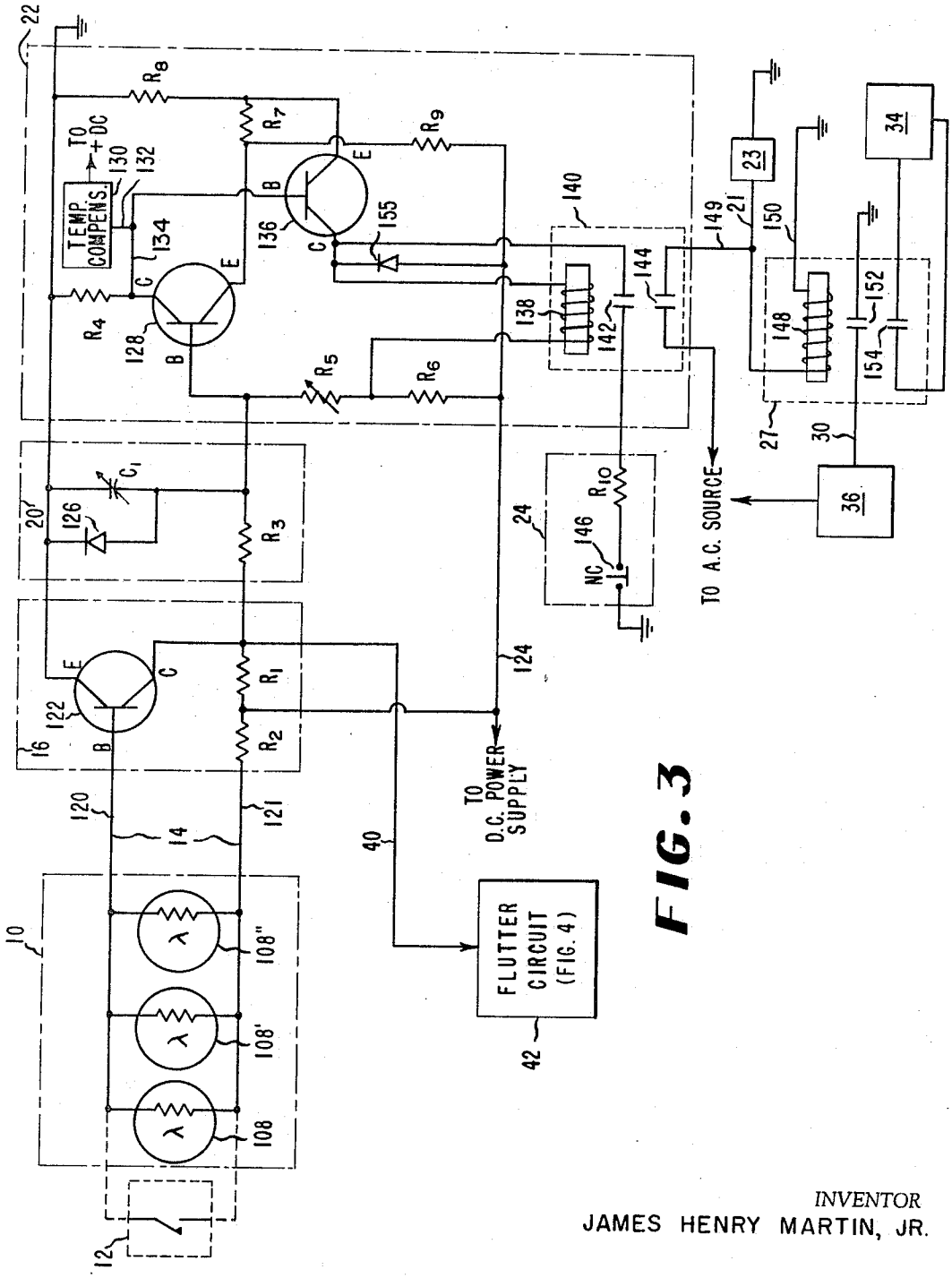

FIG. 3

INVENTOR
JAMES HENRY MARTIN, JR.

BY Frank R. Attolini

ATTORNEY

May 2, 1967 J. H. MARTIN, JR 3,317,734

DEFECT DETECTOR AND STOP MOTION CONTROL SYSTEM

Filed Jan. 15, 1964 4 Sheets-Sheet 4

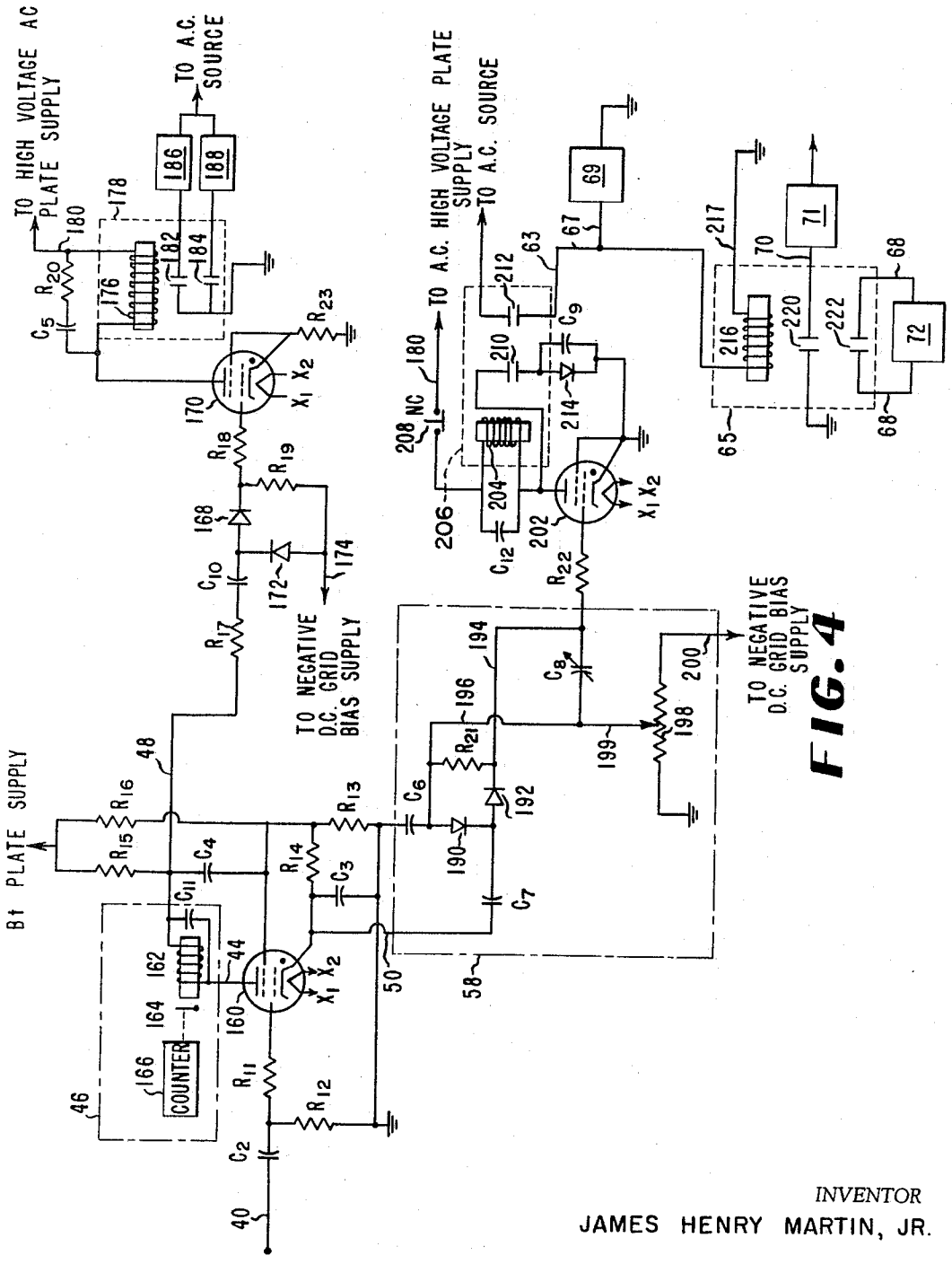

FIG. 4

INVENTOR
JAMES HENRY MARTIN, JR.

BY Frank R. Cittolini

ATTORNEY

United States Patent Office 3,317,734
Patented May 2, 1967

3,317,734

DEFECT DETECTOR AND STOP MOTION CONTROL SYSTEM

James Henry Martin, Jr., Waynesboro, Va., assignor to E. I. du Pont de Nemours and Company, Wilmington, Del., a corporation of Delaware

Filed Jan. 15, 1964, Ser. No. 337,831
4 Claims. (Cl. 250—214)

This invention relates to the processing of textile rope or tow, and particularly concerns monitoring the appearance and lateral motion of rope or tow moving at high lineal speeds and thereby detecting or predicting malfunction of the process so that it can be stopped without material damage to the apparatus used in the process. By textile rope or tow is meant an assemblage of a large number of substantially parallel multifilament continuous yarns in a generally ribbon or rope shaped form having a total weight per unit length of up to several hundred thousand denier.

There exist in the art many devices for detecting a break or flow in continuously running material. Some are mechanical, some employ ultrasonics, and some use photoelectric detecting components. However, when processing a heavy rope at high speeds, these devices sometimes fail to operate rapidly enough to prevent heavy accumulation of material in certain confined spaces in a processing machine or fail to detect a wrap of a part of the rope around a roll which may build up to dangerous levels before any malfunction is detected. On the other hand a splice in part of the rope or a transient splitting or momentary loss of a section may cause the usual detector to stop the machine unnecessarily. Finally, it has been found that an unsupported length of rope travelling rapidly between two rolls will often develop lateral vibration or flutter before malfunction occurs and therefore measurement of flutter can enable prediction of malfunction.

The primary object of this invention is to provide apparatus for detecting partial and full breaks in a rapidly moving rope of textile fibers, and to predict a break or other malfunction based on the detection and measurement of the severity of non-uniform movement or flutter in the rope. A further object is to provide apparatus for signalling a break or impending malfunction and stop the rope drive to prevent damage to the processing equipment.

These objectives are attained by this invention which comprises, in a machine for transporting textile rope between two sets or rolls at least one of which is driven, a photoelectric scanner that in one embodiment includes at least three light sources on one side of the rope and an equal number of resistance type photosensitive devices on the other side of the rope, each aligned respectively with a corresponding light source. In addition there is provided means to stop the system in response to light being detected by all the photosensitive detectors. Further, means are included to note lateral movement of the rope as well as the frequency thereof, and means to stop the system if the frequency is substantial. For these purposes there can be employed one branch circuit responsive to the photosensitive detectors comprising a preamplifier, a time delay subcircuit, an amplifier-pilot relay with hold and reset, control relay and motor contactors, alarm circuits and light indicator relay; a second circuit, receiving signals from the preamplifier, comprising a pulse driver, an electromechanical counter, and a pulse inverter-alarm relay; and a third circuit, receiving signals from the driver through an RC integrator and bias selector subcircuit for a break predictor-excessive flutter-relay with reset, and control relay for drive motor stop contactor and indicator light.

A preferred embodiment of this invention is described in the following specification wherein reference is made to the accompanying drawings in which:

FIGURE 1 is a block diagram of elements that can be used in the invention;

FIGURE 2 is an isometric schematic drawing of a scanning member for use in the invention;

FIGURE 3 is a schematic partial circuit diagram showing a preamplifier, time delay, amplifier-relay with reset, break detector-alarm and drive motor stop control;

FIGURE 4 is a schematic circuit diagram of a flutter counter, flutter alarm delay selector, excessive flutter-break predictor with reset and drive motor stop control; and

FIGURE 5 is a diagram showing a typical grid bias variation with time during rope flutter.

In FIGURE 1 there is shown the basic functional elements of this invention comprising a scanner **10** with three photoelectric detectors and an optional mechanical plunger backup switch **12**, details of which will be given hereinafter. A cable **14** connects the scanner to a preamplifier **16**, the output of which is carried over line **18** to a time delay subcircuit **20** which feeds an amplifier-pilot relay **22** having an external hold and reset circuit **24** operating through cable **26** and an indicator light **23** operating through line **21**. The output of amplifier-relay **22** is carried through line **25** to control relay **27** and then over lines **28**, **30** and **32** to, respectively, a drive motor stop circuit **34**, an alarm control relay energized lamp circuit **36** and an optional logic relay circuit **38**. The output of preamplifier **16** is also carried over line **40** to counter driver and pulse shaper circuit **42**. The output of this latter circuit **42** is directed first over line **44** to an electromechanical counter **46** and over lines **48** and **50** first, to a pulse inverter/flutter alarm-relay circuit **52** and then over cable **54** to a flutter alarm light and horn circuit **56**. Another signal from circuit **42** is carried over line **50** to RC integrator and bias selector **58** and over cable **60** to the break predictor and excessive flutter pilot-relay circuit **62**, having reset circuit **64** connected through cable **66** and indicator light **69** connected by line **67**. The output of circuit **62** is also carried over line **63** to control relay **65**, to a drive motor stop control circuit **72** by line **68**, to remote indicator light **71** by line **70**, and optionally over line **76** to the logic relay circuit **38**.

In FIGURE 2 scanner assembly **10** is shown to comprise a rectangular block with a slot **101** shaped for passage of rope **100** passing in a straight line between two sets of rolls. The two sets of rolls indicated may, for example, be constant torque pull rolls and crimper rolls in an apparatus line adapted to make and then crimp rope. Such apparatus is conventional and is well known, and generally includes a plurality of rope-ribbon supply lines which are fed through a series of driven and idler rolls. The rope-ribbons are then directed to stacking guides to form a single tow or rope **100**. After steaming, the rope passes through constant torque pull rolls, shown generally as **103** in FIGURE 2, and then to crimper rolls **107**. After crimping, the rope or tow can be stored, used as such, cut to staple, or otherwise employed in a manner that is of no materiality to the present invention. Normally at least one of the sets of rolls **103** and **107** is driven. The scanner assembly **10** in this embodiment is located about the moving rope **100** between these sets of rolls. It will be appreciated that one or more driving means is associated with the rope forming apparatus and supplied with power of suitable characteristics for each driven part in the system. In the discussion in this application reference is made to but a single drive motor. It should be understood that a single driving means or a plurality may actually be used; however, in the latter event

all must be controllable at a single point for stopping purposes. Consequently, it will be understood that reference to the drive motor is to be construed broadly to indicate that stopping the entire system is involved, without regard to the actual number of motors that may be employed.

The scanner is shown broken away to reveal a light source **104**, lens **106** and photosensitive device **108** in line. Similar light source and detector assemblies (not shown) are aligned with lenses **106'** and **106''**. Lenses and detectors may be recessed if protection is needed. The three sources of light are connected in parallel with leads passing through conduit **102** to a low voltage power supply not shown. Similarly the three photosensitive devices **108**, **108'** and **108''** (FIGURE 3) are connected in parallel and with leads extending through conduit **110** (forming cable **14** of FIGURE 1). The light beam from the middle assembly of light source, lens and photo device is aligned substantially with the center of the moving rope **100** and the other two light beams are focused near the two side edges of the rope at distances from the edges that will avoid false stops from minor edge instability but close enough to sense lateral movement characterized as flutter. The photo devices are of the photo resistive type such as Texas Instruments Inc., Type IN2175. The light sources are straight filament lamps such as Westinghouse No. 44. The lenses are double convex type such as Edmund Scientific Co., 10 mm. diameter with a 13.1 mm. focal length. Of course other commercially available devices can be used as well, if desired. Mounting recepticals are provided for the light bulbs and photo devices and adjusting screws may be provided to align each assembly as needed. When it is necessary to provide for ropes of larger width, the scanner may be constructed in two or more separable parts such as by division along a plane indicated by dotted line **113**. In some cases, the assembly is provided with vapor proof seals and possibly with air purge arrangements in order to prevent vapors or liquids from penetrating the assembly. A mechanical plunger switch **12** may be provided as a backup switch in parallel with the photoelectric devices such that it will be activated in case rope builds up in the area of the scanner, thus blocking off the lights and preventing a machine stop being activated in the usual manner by the light sources.

FIGURE 3 is a schematic diagram of the essential elements of the rope break detector. Here the three photosensitive devices **108**, **108'** and **108''** are shown connected in parallel and their two leads **120**, **121** comprising cable **14** of FIGURE 1. Optional backup pressure switch **12** is also connected across the two leads **120** and **121**. Lead **120** is shown connected to the base of a first transistor **122**. This transistor is employed as a preamplifier and has its emitter connected to ground and its collector connected through resistor R_1 to a D.C. power supply over line **124**. Power to line **124** is provided from a conventional D.C. power supply (not shown) furnishing in this case approximately —30 volts D.C. The second lead **121** from the photosensitive devices is connected to current limiting resistor R_2 and thense also to the D.C. power line **124**. An RC time delay circuit comprising adjustable capacitor C_1 and resistor R_3, with diode **126** connected around C_1, transmits a signal from transistor **122** to the base of a second transistor **128** in the amplifier relay **22**. The collector of this latter transistor is connected through resistor R_4 to ground. A conventional bias temperature compensating circuit **130** is connected through line **132** to a point between the collector of transistor **128** and resistor R_4. The base of transistor **128** is also connected through adjustable resistor R_5 and resistor R_6 to line **124** of the D.C. power supply. The emitter of transistor **128** is connected through resistor R_9 to the D.C. power supply line **124** as well as through resistor R_7 and resistor R_8 to ground. A wire **134** is connected from the collector of transistor **128** to the base of a third transistor **136**. The emitter of this latter transistor **136** is connected through resistor R_8 to ground and the collector is connected to the operating coil **138** of a pilot relay **140** and through coil **138** to a junction between resistors R_5 and R_6. This collector is also connected through diode **155** to D.C. power line **124**. Relay **140** contains two sets of contacts **142** and **144**, which are normally open. One side of contacts **142** is connected to the collector terminal of transistor **136** and the other side of contacts **142** is connected to resistor R_{10} and then through a normally closed push type switch **146** of the hold and reset system **24** to ground. The second set of contacts **144** in relay **140** are connected on one side to an A.C. power source and on the other side through line **149** to the operating coil **148** of control relay **27** and thence to ground by line **150**. Line **21** connects line **149** to a control actuated indicator lamp **23** and on to ground. Relay **27** contains two sets of contacts **152** and **154**, also both normally open. Contacts **152** are connected on one side to ground and the other side to a remote control relay energized indicating light and alarm circuit **36**, and thence to an A.C. power source. The other set of contacts **154** are connected to the drive motor stop supervisory circuit **34**. Circuit **36** may be a panel light and/or a horn or other alarm indicating device, either visual or aural. Finally a wire **40** is connected from the collector of transistor **122** to the flutter circuit **42** detailed in FIGURE 4 and described below.

In FIGURE 4 the collector output of preamplifier transistor **122** of FIGURE 1 is shown connected over line **40** to a capacitor C_2 and thence branching to resistors R_{11} and R_{12}. The other terminal of current limiting resistor R_{11} is connected to the control grid of a gas filled thyratron tube **160**, and the second terminal of the resistor R_{12} is connected to ground. The plate of thyratron **160** is connected through line **44** to coil **162** of an electromechanical counter **46** and thence through bleed resistor R_{15} to a B+ plate power supply (not shown). An armature **164** of the counter is connected mechanically to a count indicator **166**; a filter capacitor C_{11} is connected across coil **162**. A pulse capacitor C_4 is connected between bleed resistor R_{15} and the supressor grid of tube **160**. A bias current resistor R_{16} is connected between the plate supply and the screen grid of tube **160**. This screen grid is further connected through feedback resistor R_{14} to the cathode of tube **160** and through cathode bias resistor R_{13} to ground. A filtering capacitor C_3 is connected between the cathode of tube **160** and ground. The line **48** of FIGURE 1 is shown now in more detail in FIGURE 4 to be connected from the common point between counter coil **162** and plate bleed resistor R_{15}, and is further connected in series through a resistor R_{17}, a capacitor C_{10}, a diode **168** and a further current limiting resistor R_{18} to the control grid of second thyratron tube **170**. From a point between capacitor C_{10} and diode **168**, there is connected a diode **172**, the other terminal of which is connected to line **174** coming from a negative D.C. grid power supply, not shown. From the other side of diode **168**, a resistor R_{19} is also connected to line **174**. The plate terminal of tube **170** is connected through an alarm relay coil **176** to line **180** leading to a high voltage A.C. plate supply source, not shown. A smoothing and voltage limiting capacitor C_5 and resistor R_{20} in series are connected in parallel with relay coil **176**. Relay **178** contains two sets of contacts **182** and **184**, both of which are normally open. One side of both sets of contacts is connected to ground. One side of contacts **182** is connected through a horn **186** to an A.C. power source (not shown). Similarly, one side of contacts **184** is connected through an indicator light **188** and thence to the A.C. source. Finally, the suppressor grid of tube **170** is connected to the cathode and thence to ground through a current limiting resistor R_{23}.

Returning to tube **160** (FIGURE 4), a line **50** is connected from the cathode of tube **160** through capacitor

C_7, diode **192** and over line **194** to a current limiting resistor R_{22} to the control grid of a third thyratron tube **202**. From a point between capacitor C_7 and diode **192**, a second diode **190** is connected with its opposite terminal connected through by-pass capacitor C_6 to ground. A grid leak resistor R_{21} is connected around diodes **190** and **192**. From the common terminal of capacitor C_6 and resistor R_{21} a line **195** is connected first to the slider terminal **199** of potentiometer **198** and second to one side of variable capacitor C_8. The other terminal of capacitor C_8 is connected through the current limiting resistor R_{22} to the control grid of tube **202**. Power is supplied to potentiometer **198** from a negative grid bias supply (not shown) over line **200** and thence through the potentiometer to ground. Line **200** may be connected to line **174** and a common supply used. The plate of tube **202** is connected through coil **204** of pilot relay **206** and thence through a normally closed switch **208** to line **180** of the high voltage A.C. plate supply. A filter capacitor C_{12} is connected across coil **204**. Relay **206** contains two sets of normally open contacts **210** and **212**. One side of contacts **210** is connected to the plate terminal of tube **202** and the other side of this set of contacts is connected through a hold circuit containing a diode **214** in parallel with a capacitor C_9 and thence to ground. The other set of contacts **212** is connected on one side over line **63** through operating coil **216** of control relay **65** and thence by line **217** to ground. Line **63** is also connected by line **67** to control actuated indicator lamp **69** and thence to ground. On the other side of contacts **212** there is connected a conventional A.C. power source. Relay **65** contains two sets of normally open contacts **220** and **222**. One side of contacts **220** is connected to ground and the other to line **70** of remote control relay energized indicating lamp **71**. The other set of contacts **222** is connected over cable **68** to drive motor stop control circuit **72**.

In operation this device performs three basic functions: (1) rope break detection, alarm, and automatic drive stop, (2) rope defect counting and signaling, and (3) rope flutter integration and break prediction with subsequent automatic drive stop and signaling. When acceptable rope is passing smoothly through slot **101** in scanner **10**, each of the three light source beams are interrupted or covered so that no appreciable light falls on the detectors and they are each in their high resistance state. If, however, the rope breaks upstream of the rolls feeding rope toward the scanner **10**, the light sources will be uncovered and light will impings on the detectors changing them to the low resistance state. This will cause a substantial electrical pulse of considerable duration to pass over line **14** to the preamplifier and thence over lines **18** and **40** to the various subcircuits. Similarly, loss of part of the rope causing a thin spot in the center or near the edges, due to some malfunction upstream (such as a wrap of part of the rope around a roll) will cause one or more of the sensors to receive sufficient light to switch to a lower resistance state, but this will result in a lesser current flow than when all sensors are receiving light, as in the instance of a rope break. Since the sensors are in parallel, this will furnish a signal to the preamplifier as before. A transient loss of part of the rope cross-section or lateral vibrations (flutter) in the progress of the rope through the scanner will cause pulses of current having varied durations and frequencies of occurrence.

The adjustable time delay circuit **20** (FIGURE 1) comprising variable capacitor C_1, diode **126**, and resistor R_3 (FIGURE 3) makes it possible to preselect the magnitude of pulse duration which will energize amplifier-relay **22** (FIGURE 1) and as a result operative drive motor stop control and the alarms of circuits **34** and **36**, respectively. In the amplifier-relay circuit **22** as detailed in FIGURE 3, the transistors **128** and **136** operate, with hold and reset circuit **24**, to maintain pilot relay **140** in the energized condition following a pulse caused by a rope break. Once energized, the circuit, comprising the D.C. power supply in line **124** through resistor R_6, coil **138**, and contacts **142** of relay **140**, resistor R_{10}, switch **146** to ground, holds transistor **136** in its operating state until switch **146** is opened thus resetting the amplifier-relay circuit **22**. Thus an upstream break or malfunction of predetermined length of time duration will cause the process to be stopped and signals energized. Should a break occur below the scanner and the rope accumulate above the scanner, the sensors might in some cases not be uncovered and the automatic stop not energized. To take care of this possibility pressure switch **12** of FIGURES 1, 2 and 3 is placed on the top surface of the scanner adjacent to the slot **101** and wired in parallel with the detectors so that the break detector circuit will then be energized if rope piles up and presses switch **12**.

Should the defect scanned provide a signal of a duration shorter than the aforementioned preselected value, the signal would not operate the circuit **22** of FIGURE 1 and FIGURE 3 because of the operational parameters thereof, but would be conducted over line **40** to the other circuits including circuit **42**, **52**, **58** and **62**. Each high speed transient of this type is accepted by the thyratron **150** (FIGURE 4) and associated circuit so that, when thyratron **160** fires, an electromechanical counter **46** is actuated and a pulse is further transmitted over line **48** to circuit **52** comprising thyratron tube **170** and associated circuitry such that thyratron **170**, when it is fired, operates (through relay **178**) an audible signal such as a horn and an indicator light. Grid leak resistor R_{19} is selected to provide a time delay in the resetting of thyratron **170** such that the alarm and indicating devices are energized for a brief period such as, for example, one second for each occurrence of a high speed transient such as a flutter.

These high speed transients may be repetitive if, for example, the rope starts to vibrate or flutter in its progress through the scanner **10**. Flutter may be caused by a defective rope, incorrectly positioned guides, incorrectly spaced rolls, malfunction downstream such as uneven roll takeup of the rope due, for example, to excessive pressure in a crimper or other crimper malfunction when the rope is fed to a stuffer box type crimper. A rope break or other malfunction may be predicted on the basis of the number of flutter counts in a given length of time. This is done by means of the RC integrator and bias selector circuit **58** and the associated break predictor-excessive flutter stop circuit **62**. When a flutter occurs, which fires thyratron **160**, a signal is also introduced into circuit **58** through coupling capacitor C_7. Prior to receiving a pulse through capacitor C_7 the grid thyratron **202** is negatively biased to a voltage level determined by the setting of slider **199** of the potentiometer. When a signal is received through C_7 its polarity is such that the negative grid bias on tube **202** is reduced by a small adjustable increment. In between signals the grid bias is returned toward its original level at a rate adjusted by the value of capacitor C_8 and bleed bias resistor R_{21}. Thus by adjustment of the circuit constants in the circuit **58** a preselected number of flutter pulses is required within a preselected length of time before the grid bias is reduced to an extent sufficient to fire thyratron **202**. FIGURE 5 shows a typical graph of grid bias change with time as a result of flutter. When firing does occur relays **206** and **65** are energized which in turn operate the drive motor automatic stop **72** and the remote control relay energized indicator light **71**, respectively. In circuit **58** the resistor R_{21} forms an RC time constant circuit with the integrating capacitor C_8. In one embodiment, this time constant is adjusted to be approximately 30 seconds. Therefore, flutter incidents occurring less frequent than 30 seconds apart will be completely ignored by this circuit. Once the thyratron **202** fires, the circuit provided by contacts **210** of relay **206** which connects the plate of tube **202** through diode **214** and capacitor C_9 (in parallel) to

ground, prevents relay **206** from being de-energized and therefore it remains energized until an operator manually opens switch **208**, thus dropping the voltage on the plate of this tube **202** and relay coil **204** resetting this thyratron hold circuit. With this thyratron firing thereby indicating a flutter condition that is of severity that probably will cause a break, it is necessary that the system be shut down. This occurs upon current passing through coil **204**, closing contacts **212** and thereby activating coil **216**. The latter coil closes contacts **222** shutting off the drive motor **72**.

Thus there is provided by this invention an automatic signalling and drive motor stop system based on the use of photoelectric detectors which, when applied to a textile rope being transported in a straight line free span between two sets of rolls, at least one set being driven, not only detects breaks in the rope and operates automatic drive stop and break signalling apparatus, but also detects splits in the rope, transient defects and flutter; counts and signals these defects and furthermore predicts an impending serious malfunction on the basis of flutter frequency and operates an automatic drive motor stop device when flutter frequency exceeds a preselected level.

In some applications it may be necessary to employ more than one of the devices of this invention in connection with an integrated rope processing machine. In addition other break or defect detecting devices may be employed such as, for example, knot switches, which operate when a knot of sufficient size is brought to the rope processing machine, or individual ribbon break detectors when the rope is made up of individual smaller ribbons of fibers which pass through part of the process individually before combining into the rope. When this is the case, these various devices are electrically interlocked to cause automatic stopping and at the same time may operate a single alarm from these several devices. In addition, relay logic may be provided which suppresses second or later outputs from the various devices and therefore the identity of the device which first detected the machine malfunction and operated the automatic drive stop device is indicated.

This invention has been illustrated above by description of a preferred embodiment. Additional embodiments or modifications such as for example use of other trigger devices than thyratrons will be apparent to one skilled in the art without departure from the inventive concept which, accordingly, is intended to be limited only by the scope of the following claims.

What is claimed is:

1. In combination with rope forming apparatus including driving means and spaced sets of rolls between which rope passes and in which at least one of the sets of rolls is driven, scanning means about the rope between the sets of rolls, the scanning means comprising a light source aligned on the path of the rope between the sets of rolls and focused transverse to the normal direction of rope movement with a predetermined field defining slightly less than a normal width of rope, and a photoelectric detector aligned with the light source to receive light in the partial and total absence of rope therebetween, first means comprising a pre-amplifier providing an output signal to an amplifier-relay operative to stop said driving means on an extended signal from the photoelectric detector, means responsive to another output signal from the pre-amplifier comprising a first trigger device adapted to function on any signal from the pre-amplifier, signalling means responsive to an output signal from the trigger device, second means responsive to another output signal of predetermined polarity from the trigger device comprising a second trigger device subject to a predetermined bias of polarity opposite to said predetermined polarity, said second trigger device being adapted to function upon changing of its bias to a predetermined level by successive output signals from the first trigger device, and relay means to stop the driving means operative upon the functioning of the second trigger device.

2. A combination in accordance with claim **1** including means to apply bias to said second trigger device to return its bias to the predetermined level in a predetermined period of time, whereby the second trigger device is prevented from functioning upon receipt of a plurality of signals that are substantially spaced.

3. In combination with rope forming apparatus including driving means and spaced sets of rolls between which rope passes and in which at least one of the sets of rolls is driven, scanning means about the rope between the sets of rolls, the scanning means comprising a plurality of light sources aligned on the path of the rope between the sets of rolls and focused transverse to the normal direction of rope movement with a predetermined field defining slightly less than a normal width of rope, and a plurality of photoelectric detectors aligned with the light sources to receive light in the partial and total absence of rope therebetween, first means comprising a pre-amplifier providing an output signal to an amplifier-relay operative to stop the driving means on an extended signal from all the photoelectric detectors, means responsive to another output signal from the pre-amplifier comprising a first thyratron adapted to fire on any signal from the pre-amplifier, signalling and counting means responsive to an output signal from the thyratron, second means responsive to another output signal of predetermined polarity from the thyratron comprising a second thyratron subject to a predetermined grid bias of polarity opposite to said predetermined polarity, said second thyratron being adapted to fire upon lowering of its grid bias to a predetermined level by successive output signals from the first thyratron, relay means to stop the driving means operative upon the firing of the second thyratron, and signalling means to indicate the stopping of the driving means.

4. A combination in accordance with claim **3** including means to apply grid bias to said second thyratron to return the bias thereon to the predetermined level in a predetermined period of time, whereby the second thyratron is prevented from firing upon receipt of a plurality of signals from said first thyratrons that are substantially spaced.

References Cited by the Examiner

UNITED STATES PATENTS

2,229,638	1/1941	Chamberlin et al.	250—219
2,809,297	10/1957	Hartwig et al.	324—78 X
2,999,208	9/1961	Ruehlemann	328—186 X
3,043,991	7/1962	Schneider et al.	250—219
3,105,151	9/1963	Nash	250—219
3,257,559	6/1966	McMullen	250—219

References Cited by the Applicant

UNITED STATES PATENTS

2,962,596	11/1960	Leimer et al.
3,055,200	9/1962	Meimers et al.

FOREIGN PATENTS

612,024	1/1961	Canada.
838,176	6/1960	Great Britain.
905,318	9/1962	Great Britain.

RALPH G. NILSON, *Primary Examiner.*

M. A. LEAVITT, *Assistant Examiner.*