F. X. SCHWAB.

DELIVERY CASE FOR BOTTLED BEVERAGES.

APPLICATION FILED JAN. 24, 1920.

1,378,197. Patented May 17, 1921.

Fig. 1

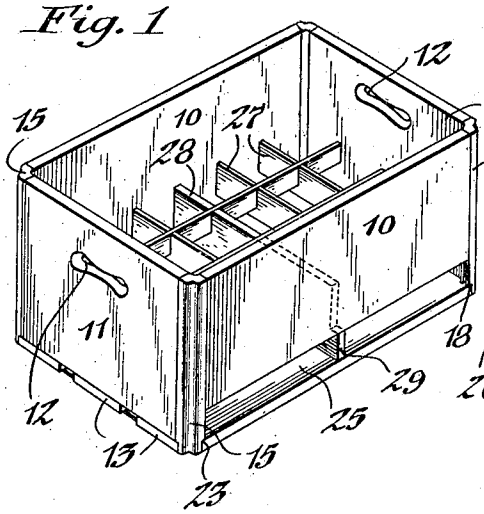

Fig. 2.

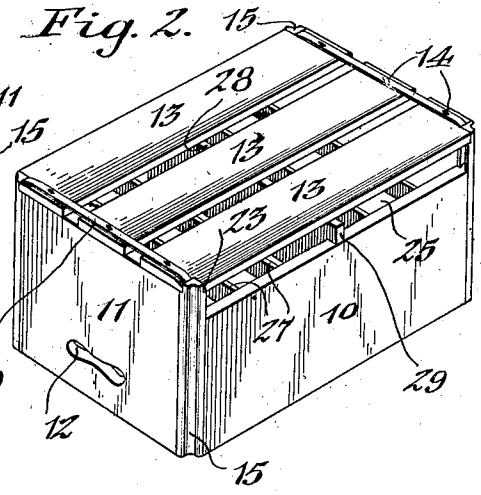

Fig. 3.

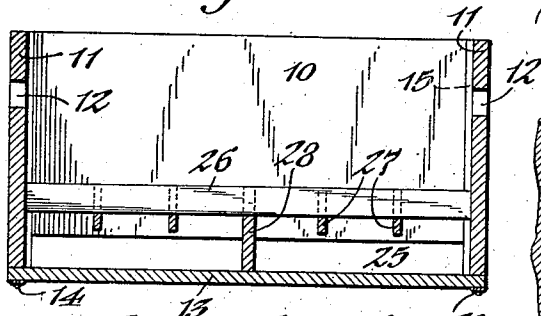

Fig. 4.

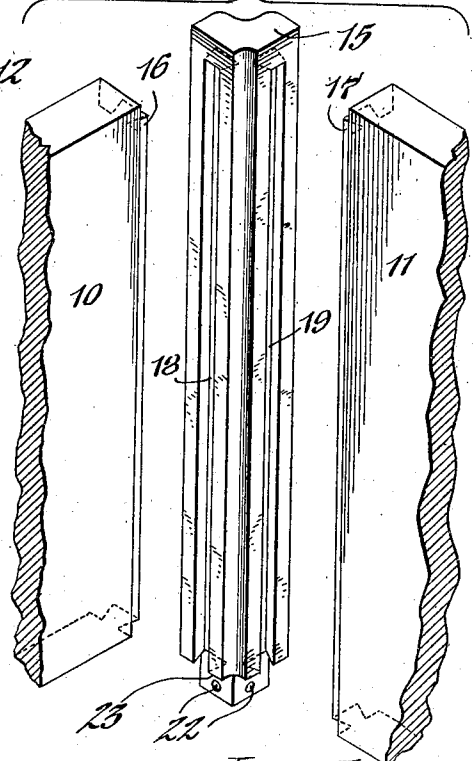

Fig. 5.

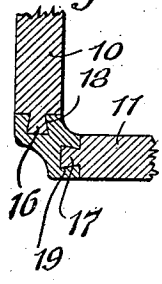

Fig. 6.

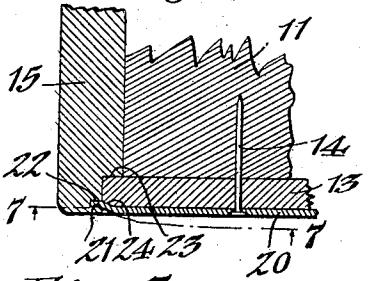

Fig. 7.

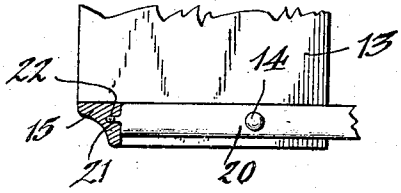

Inventor,
Frank X. Schwab,
by Geiger & Pyle
Attorneys.

UNITED STATES PATENT OFFICE.

FRANK X. SCHWAB, OF BUFFALO, NEW YORK.

DELIVERY-CASE FOR BOTTLED BEVERAGES.

1,378,197. Specification of Letters Patent. Patented May 17, 1921.

Application filed January 24, 1920. Serial No. 353,694.

To all whom it may concern:

Be it known that I, FRANK X. SCHWAB, a citizen of the United States, residing in Buffalo, in the county of Erie and State of New York, have invented new and useful Improvements in Delivery-Cases for Bottled Beverages, of which the following is a specification.

This invention relates to the boxes or cases used for delivery and shipping bottled beverages of various kinds, as well as meat and other goods.

Its object is the provision of a strong, light, durable and inexpensive case of this character which permits renewal of broken or damaged parts, thus avoiding the necessity and loss of discarding the entire case.

In the accompanying drawings: Figure 1 is a perspective view of the case. Fig. 2 is an inverted perspective view thereof. Fig. 3 is a longitudinal central section of the same. Fig. 4 is a perspective view of one of the corner-joints or connections. Fig. 5 is an enlarged horizontal section of one of the corners of the case. Fig. 6 is a fragmentary transverse section, on an enlarged scale, through one of the locking strips. Fig. 7 is a horizontal section on line 7—7, Fig. 6, looking upward.

Similar characters of reference refer to like parts throughout the several views.

The case is substantially rectangular in form and in the preferred construction shown in the drawings, comprises side walls 10, end walls 11 having hand holes 12, spaced bottom slats 13 secured to the end walls by nails 14 or other suitable fastenings, and upright corner-pieces or connections 15. The latter may be of cast metal, pressed steel or other sheet metal, while the walls and bottom slats may be of wood, sheet metal, or other appropriate material.

The end and side walls are removably connected to the corner connections preferably by dove tail tenons 16, 17 interlocking with corresponding vertical grooves 18, 19 in the contiguous edges of the connections. These grooves terminate short of the upper ends of the connections to prevent downward displacement of the connections and upward displacement of the walls. The lower ends of the connections extend below the end and side walls, preferably flush with the lower sides of the bottom slats 13, and the connections are locked against upward movement on the walls by strips 20 extending across the undersides of the bottom slats and interlocking with the connections. In the construction shown,—Figs. 6 and 7, these locking strips are provided at each end with a reduced portion or tenon 21 which fits into a socket or opening 22 in the side of the adjacent corner connection, thereby reliably preventing upward displacement of the connections. The socketed lower portion of each connection may be reduced as shown, to form a shoulder 23 which bears against the upper side of the adjacent bottom slat. As shown at 24, the outer corners of the side slats of the bottom are recessed to make room for the tenons 21 of the locking strips which are raised above the plane of the strips to allow the lower ends of the corner connections to terminate flush with the undersides of said slats, as best shown in Fig. 6.

The locking strips 20 also serve as rails or shoes by which the case slides easily on chutes and conveyers and on and off delivery wagons. They also act as reinforcing and protecting straps for the bottom of the case.

The end walls of the case may extend to the bottom thereof, but the side walls preferably stop short of the bottom to leave side apertures 25 extending from end to end of the case. Customers sometimes put papers and rubbish into the empty cases and said side apertures permit them to be readily cleared of such accumulations.

When the case is used for delivering or shipping bottled goods, it is provided with suitable cells or compartments formed by longitudinal partitions 26 and transverse partitions 27, 28. The transverse center partition 28 is preferably somewhat heavier than the others, and the base portions 29 of its ends are reduced to pass under the side walls, said reduced ends coming flush with the faces of these walls. These reduced ends support the side walls and form stops which prevent downward displacement thereof.

While having the advantages of strength, lightness and durability, this improved case affords the further important advantage of permitting ready repair thereof without requiring the whole case to be replaced, this being due to the fact that no nails or similar fastenings are employed to fasten the side and end walls together. Should one or more of the walls be damaged or broken they can be readily replaced by removing one or both of the locking straps. This releases the corner-connections which can then

be withdrawn from the walls and after new parts have been substituted for the damaged ones, the corner connections and the locking strips are replaced.

The corner connections, while facilitating this operation, form guards for protecting the corners of the case and also resist warping and bulging of the walls of the case.

This improved case can also be readily dismembered or knocked down for compact shipment, thus correspondingly reducing the shipping expenses.

I claim as my invention:

1. A case of the character described, comprising side and end walls having end tenons, removable upright corner connections having vertical grooves which receive said tenons, and locking members extending crosswise of the case and engaging said corner connections to prevent displacement thereof.

2. A case of the character described comprising a bottom and side and end walls having end tenons, removable upright corner connections having vertical grooves which receive said tenons, and locking strips extending across the bottom of the case and interlocking with said connections to prevent displacement thereof.

3. A case of the character described comprising a bottom and side and end walls having end tenons, removable upright corner connections having vertical grooves which receive said tenons, said connections being provided in their lower portions with locking sockets, and locking devices attached to the underside of said bottom and engaging said sockets to prevent displacement of said corner connections.

4. A case of the character described comprising side and end walls having end tenons, removable upright corner connections having vertical grooves which receive said tenons, the lower ends of said connections being substantially flush with the bottom of the case and provided near their lower portions with locking sockets, and strips extending across the bottom of the case and having their end portions arranged in said sockets, said end portions being raised above the plane of the strips.

5. A case of the character described comprising side and end walls having end tenons, removable upright corner connections having vertical grooves which receive said tenons, said grooves being closed at their upper ends to prevent downward displacement of said connections, and means engaging the lower portions of said connections for locking them against upward displacement.

FRANK X. SCHWAB.