March 28, 1950 C. A. LEWIS 2,502,263

AIR STERILIZING AND DEHYDRATING APPARATUS FOR OXYGEN TENTS

Filed March 9, 1948 2 Sheets-Sheet 1

Fig. 1

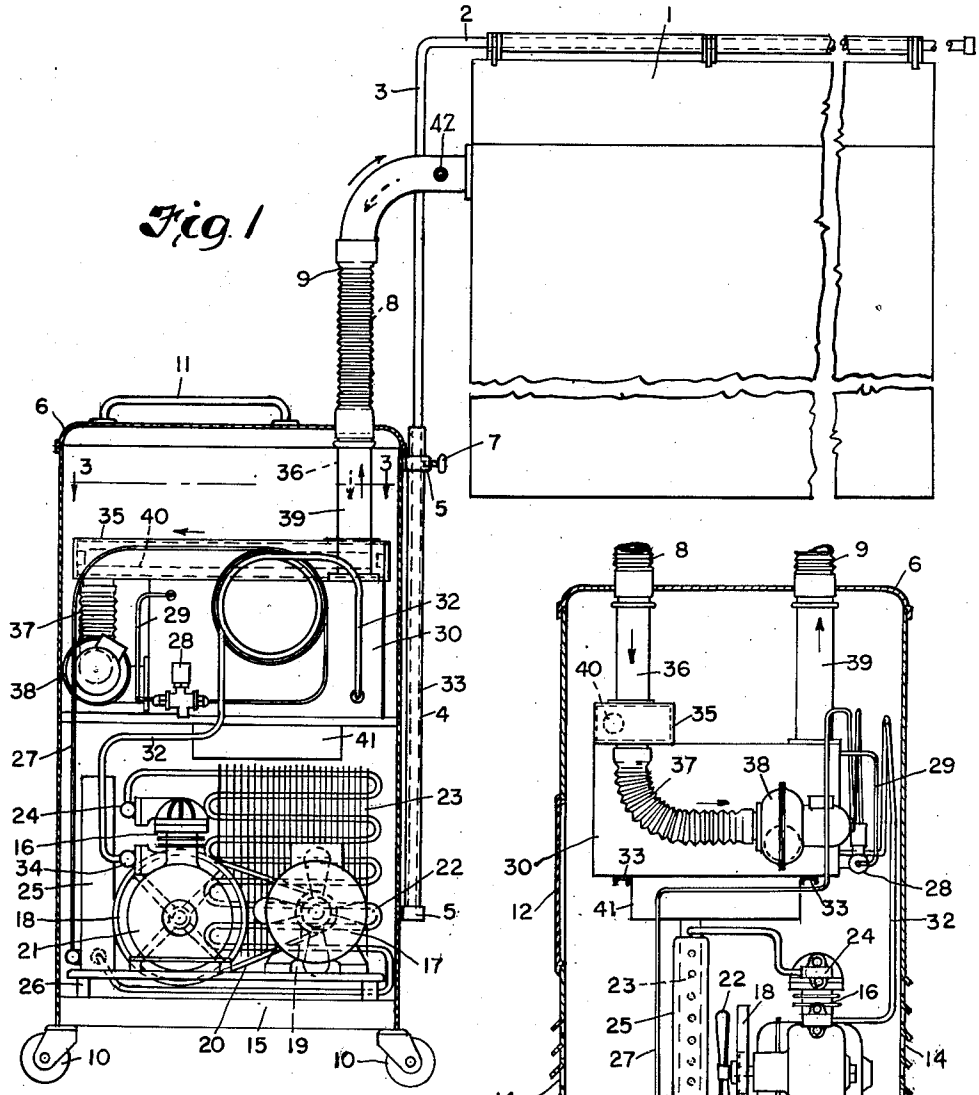

Fig. 2

INVENTOR.
CLIFFORD A. LEWIS
BY
Oberlin & Limbach
ATTORNEYS.

March 28, 1950 C. A. LEWIS 2,502,263

AIR STERILIZING AND DEHYDRATING APPARATUS FOR OXYGEN TENTS

Filed March 9, 1948 2 Sheets-Sheet 2

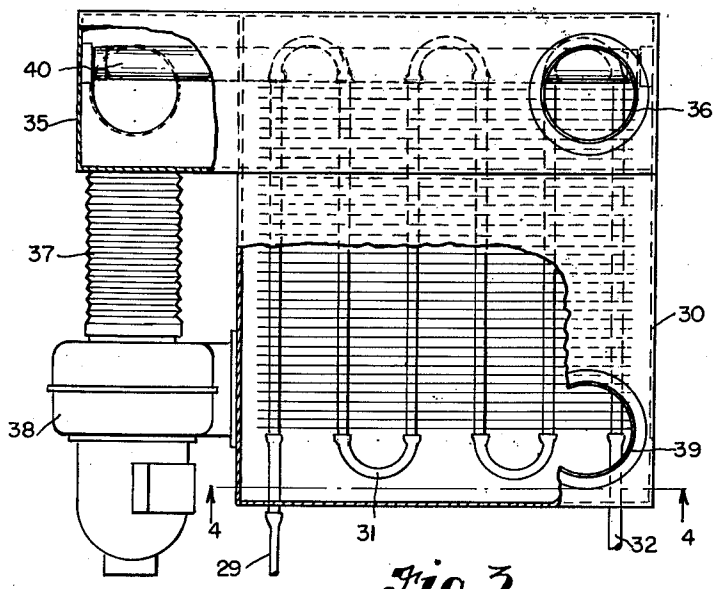

Fig. 3

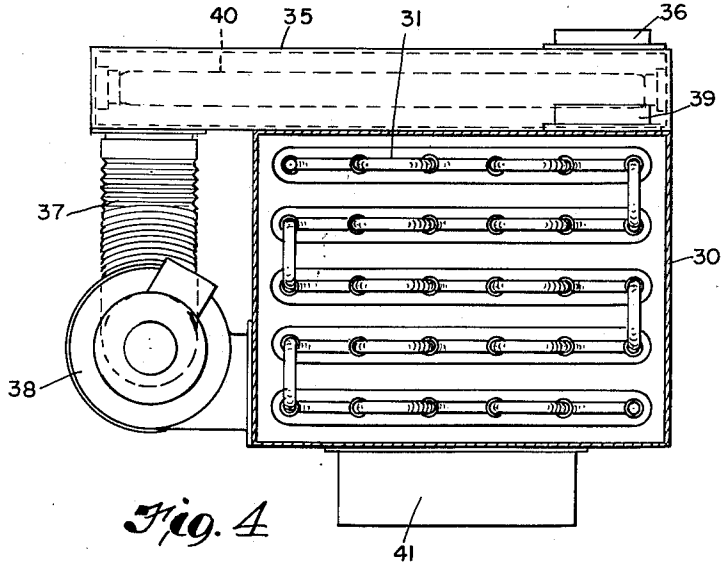

Fig. 4

INVENTOR.
CLIFFORD A. LEWIS
BY
Oberlin & Limbach
ATTORNEYS.

Patented Mar. 28, 1950 2,502,263

UNITED STATES PATENT OFFICE

2,502,263

AIR STERILIZING AND DEHYDRATING APPARATUS FOR OXYGEN TENTS

Clifford A. Lewis, Bay Village, Ohio

Application March 9, 1948, Serial No. 13,868

8 Claims. (Cl. 62—129)

1

The present invention, while relating generally as indicated to an air purifying and dehydrating apparatus, is more especially concerned with an apparatus which in association with an oxygen tent or canopy effectuates sterilization, temperature control, and dehydration of a stream of air circulated through the tent, for rendering the same suitable for breathing by a patient undergoing treatment within said tent. More specifically, the present invention relates to an air circulating apparatus which includes means for eliminating air-borne irritants, germs, infectious diseases, and the like, and thereby thoroughly sterilizes and deodorizes the air before it is breathed by the patient in the associated tent or canopy.

Conventional forms of oxygen tent apparatuses in which an oxygen supply tank is simply connected directly to the oxygen tent with suitable regulating devices on said tank controlling the quantity of raw oxygen injected into the tent are open to the objection that the tent readily becomes contaminated and should be replaced after each use, or at least sterilized. Of course, the single use of an oxygen tent is a costly proposition to both the hospital and the patient. On the other hand, because the tents cannot be satisfactorily sterilized, the continued use of partially sterilized tents is dangerous not only to the patient but to the attending hospital personnel.

Briefly outlined, the present invention has to do with an apparatus which overcomes the aforesaid objections by providing an air circulatory system of which the tent is a component, there being employed a blower in such system for circulating a stream of air through the tent for breathing by the patient therein and including a sterilizing or germicidal lamp preferably located exteriorly of the tent around which bacteria-laden air flows, and a refrigerating unit also located exteriorly of the tent through which the purified or sterilized air passes to reduce the temperature thereof and at the same time remove excess moisture therefrom in the form of condensate. In addition, the cool, moist refrigerating unit is operative to collect excess carbon dioxide and germs, etc., which are circulated through a tight chamber enclosing said unit and is provided with a drip pan therebelow into which said collected matter is deposited. Fresh air may, of course, be introduced into the aforesaid stream through leakage around the tent or special openings associated with the tent and, as is well known in the art, suitable means may be

2

associated with said system for supplying raw oxygen thereinto and for maintaining a desired balance between the injected raw oxygen and that consumed by the patient. Obviously the constant circulation of a stream of purified air through the tent is highly desirable from a hygienic standpoint both to the patient and to hospital personnel. Thus the patient will breath only thoroughly sterilized and deodorized air which is free from contamination and infectious diseases.

Accordingly, it is a primary object of this invention to provide an apparatus of the character indicated which meets the aforesaid requirements and which is of a simple compact form and light-weight construction so as to be conveniently transportable from one place to another and which is so simple to operate as to essentially only require the operator to plug the apparatus into any conventional electric source receptacle.

Another object is to provide a self-contained compact cabinet unit on which the oxygen tent is horizontally, swingably, and vertically adjustable relative to said cabinet, flexible conduits being employed for interconnecting said cabinet and tent to thereby permit such adjustments.

Another object is to provide a novel circulatory system wherein the components of the system are uniquely arranged so that some of the moist bacteria-laden air exhaled by the patient and fresh air introduced into the system through the tent is drawn by a blower from the tent through a conduit next adjacent the tent having a sterilizing lamp therein and then forced by the blower after being thus purified or sterilized through a chamber containing a refrigerating means wherefrom the thus cooled and dehydrated sterilized air in condition for breathing by the patient is forced into the tent.

Other objects and advantages will become apparent as the following description proceeds.

To the accomplishment of the foregoing and related ends, said invention, then, comprises the features hereinafter fully described and particularly pointed out in the claims, the following description and the annexed drawings setting forth in detail a certain illustrative embodiment of the invention, this being indicative, however, of but one of the various ways in which the principle of the invention may be employed.

In said annexed drawings:

Fig. 1 is an elevation view of a preferred embodiment of this invention with the cabinet unit cut away to more clearly illustrate the novel ar-

rangement of the various components of the circulatory system in the interior thereof;

Fig. 2 is an elevation view of the aforesaid components (with the cabinet unit cut away) as viewed from the lefthand side of Fig. 1;

Fig. 3 is a top plan view on an enlarged scale as viewed along the line 3—3, Fig. 1, of the sterilizing and refrigerating units with portions of the containers therefor broken away to more clearly illustrate the internal construction thereof; and

Fig. 4 is a cross section view taken substantially along the line 4—4, Fig. 3.

Referring now to the drawings and first more especially to Fig. 1, the numeral 1 designates an oxygen tent or canopy of the usual construction which defines a chamber through which air with added oxygen is adapted to be circulated and breathed by a patient disposed in such chamber, said tent being horizontally slidably supported by rings or the like from a bar 2 and swingably and vertically positionable by means of a vertical bar 3 having its upper end connected to said bar 2 and its lower end rotatably and vertically slidably fitted into a tubular sleeve 4 mounted by brackets 5 onto the rear wall of a cabinet 6. Locking of bar 3 in a selected rotative and vertical position is effected as by a thumb screw 7 having threaded engagement with one of the brackets 5 and having its end frictionally engaged with said bar 3.

Connected to elbows on said tent 1 and leading into said cabinet 6 are a pair of flexible conduits 8 and 9 which are preferably of annularly pleated form as illustrated whereby to enable the aforesaid horizontal, rotative, and vertical adjustments of tent 1 relative to cabinet 6.

The cabinet 6 is preferably of generally box-like form as illustrated including casters 10 at its lower corners for facilitating movement thereof from one place to another as by means of a handle 11 secured to the top thereof. As best shown in Fig. 2, the cabinet has a removable panel 12 on one side providing convenient access to the interior thereof and is formed with louvres 14 preferably integrally formed as by a stamping operation on its opposite sides providing for the required circulation of coolant air therethrough, as will hereinafter appear.

Within cabinet 6 supported by the floor 15 thereof is a conventional compressor type refrigerating unit herein exemplarily illustrated as comprising a compressor 16 driven by an electric motor 17 through a belt 20 trained over pulleys 18 and 19 on said compressor and motor respectively, said pulley 18 having spokes 21 formed in the manner of fan blades for thus dissipating the heat of compression of the refrigerant adapted to be compressed by said compressor.

On said motor 17 is a fan 22 in front of which is a condenser 23 of the usual construction, said fan being operative to cause a current of cooling air to flow through the aforesaid louvres 14 and between the coils of the condenser and thereby carry away the heat from the refrigerant within the condenser. The inlet end of said condenser is connected as at 24 to the high pressure side of the compressor 16 and the outlet end leads to a receiver 25. Said compressor 16, motor 17, condenser 23, and receiver 25 constitute a single assemblage mounted onto a base 26 which in turn is mounted on the floor 15 of cabinet 6.

Leading upwardly from the receiver 25 is a pipe 27 coiled at its upper end and having connected thereto an expansion valve 28 of the usual form

providing a restricted orifice through which refrigerant is adapted to flow and thereby expand from a liquid compressed state to a gaseous state upon emergence from such orifice. Connected to the discharge side of expansion valve 28 is a pipe 29 of diameter greater than the pipe 27 which leads into a box 30 wherein it is connected to the inlet end of an evaporator 31 (see Figs. 3 and 4), said evaporator being operative to absorb heat from air or other medium thereabout and within the chamber formed within box 30. Said box 30 is supported above the afore-described refrigerating units by a pair of parallel channels 33 secured to cabinet 6.

From the outlet end of evaporator 31 a coiled pipe 32 leads to and is connected as at 34 to the low pressure side of the compressor 16.

With the foregoing structure in mind it is apparent that when the refrigerator contains a suitable refrigerant such as sulphur dioxide, methyl chloride, ammonia, dichloro-difluoromethane, or the equivalent, the refrigerant will first be compressed by the compressor 16 and caused to flow from the high pressure side of the compressor into the condenser 23 wherein it is cooled and condensed by the action of fan 22 and accumulated as a liquid under pressure in the receiver 25. The liquefied refrigerant then flows from the receiver 25 through the expansion valve 28 disposed in advance of the evaporator 31 whereby the reduction in pressure of the refrigerant in passing through the restricted orifice in said expansion valve causes the refrigerant to evaporate and expand at low pressure with the heat of vaporization being absorbed from the air in box 30 surrounding the evaporator 31. From the evaporator 31 the then super-heated refrigerant in gaseous state flows into the low pressure side of the compressor 16 and the cycle is repeated.

Inasmuch as the detail construction of the several components of the above-described refrigerator are well known in the art, further description thereof is deemed unnecessary insofar as the principal features of the present invention are concerned.

Secured on top of box 30 by any suitable means is a conduit 35 also preferably of box-like form and longer than box 30 having openings adjacent its opposite ends, to one of which openings is connected, by means of a pipe 36, the lower end of the previously referred to flexible conduit 8 and to the other of which openings on the end of box 35 which projects beyond box 30 is connected one end of a flexible conduit 37. The other end of said conduit 37 is connected to the intake side of a motor-driven blower 38 attached to the adjacent end of box 30 and having its discharge side leading into the chamber formed within said box. Adjacent the other end of said box 30 is a pipe 39 leading therefrom and connected to the flexible conduit 9. Within the conduit or box 35 is a germicidal or sterilizing lamp 40 operative to emit ultra-violet rays and thus destroy bacteria and germs subjected to such rays.

It is to be observed that the arrangement of the boxes 30 and 35 and the interconnecting conduit 37 and blower 38 lie within a compact outline of generally rectangular form to thereby occupy a minimum of space within the cabinet 6.

Connected into the circulatory system just described and preferably between the tent 1 and the box 30 at nipple 42 for example is an oxygen supply tank (not shown) having suitable regulat-

ing devices thereon whereby raw oxygen may be introduced into the system in a volume commensurate with the oxygen consumption of a patient disposed within tent 1.

It can now be seen that after the apparatus has been wheeled to a place of use and the tent 1 has been properly positioned over the head of a patient, and the refrigerator, the blower 38, and the lamp 40 have been set in operation with raw oxygen being injected into the system in required amount, the bacteria-laden moist air exhaled by the patient will be drawn by the blower 38 through the flexible conduit 8 and the box 35 and while flowing through the latter such air will be exposed to the ultra-violet rays emitted by the sterilizing lamp 40 thereby substantially reducing the bacteria count thereof. From the blower 38 the air thus sterilized by the rays of lamp 40 will be forced by the blower into the chamber within box 30 wherein it flows around the evaporator 31 and between the coils thereof whereupon the air is cooled to a desired temperature and the excess moisture is separated therefrom in the form of condensate. In this connection, the box 30 is formed with an open bottom below which is a sliding drawer 41 which may be periodically drawn out and condensate drained therefrom, said drawer also forming a convenient reservoir for the collection of condensate accumulated therein as a result of periodical defrosting of the evaporator 31. The sterilized air then at proper temperature and relatively dry is discharged from within box 30, by way of pipe 39 and conduit 9, into tent 1 for breathing by the patient within said tent. As indicated above, during the passage of the sterilized air to tent 1, a supply of raw oxygen will be constantly injected into the stream to replace the oxygen consumed by the patient. Of course, sufficient fresh air will enter the tent around the lower edges thereof or by specially provided openings through the walls thereof for carriage with some of the exhaled air into the circulatory sterilizing and dehydrating system.

With the apparatus described, the air contaminated by the patient will be drawn out of the tent and subjected to the sterilizing action of the ultra-violet rays emitted by lamp 40 whereby the tent itself and the associated equipment, viz. blower 38 and box 30 and evaporator 31 therein will not so readily become contaminated as to require frequent sterilization as is the case with prior art apparatuses.

Although no control means are illustrated in the drawings, it will be apparent that the top of the cabinet 6, for example, may be provided with a speed-control for fan 22, a thermometer and temperature control to indicate and control the temperature of the air stream as it flows through the chamber in box 30, and furthermore motor 17, the motor for blower 38, and lamp 40 may be interconnected to a single extension cord provided with a standard plug for convenient connection into any convenient source of electrical power such as a wall receptacle or the like.

It is apparent that by closing the canopy to provide an air-tight compartment therein, the apparatus may be operated with or without raw oxygen injected into the air stream. In such case the air circulated over the germicidal lamp 40 is thoroughly sterilized, and likewise when such sterilized air passes through the evaporator chamber the same is cooled to a proper temperature, and excess moisture and carbon dioxide removed therefrom. As another alternative, the apparatus can be operated as a germ killer without the use of oxygen or without the cooling system in operation.

Other modes of applying the principle of the invention may be employed, change being made as regards the details described, provided the features stated in any of the following claims, or the equivalent of such, be employed.

I therefore particularly point out and distinctly claim as my invention:

1. In combination, an oxygen tent into which raw oxygen is adapted to be injected, an air circulating system disposed exteriorly of said tent and forming a continuous passage including said tent, a cabinet provided with a vertically adjustable bar projecting horizontally therefrom, said tent being supported by said bar, said system comprising a pair of extensible conduits leading from said tent into said cabinet, a pair of boxes in said cabinet each respectively connected to one of said conduits, a third conduit interconnecting said boxes, a blower in said third conduit operative to circulate air through said boxes and conduits and said tent, a sterilizing lamp in one of said boxes for sterilizing such circulated air, said one of said boxes and conduit connected thereto being arranged to preclude the light emitted by said lamp from entering within said tent, and refrigerating means in the other of said boxes for cooling and thus condensing moisture from such circulated air.

2. In combination, an oxygen tent into which raw oxygen is adapted to be injected, an air circulating system disposed exteriorly of said tent and forming a continuous passage including said tent, a cabinet provided with a vertically adjustable bar projecting horizontally therefrom, said tent being supported by said bar, said system comprising a pair of extensible conduits leading from said tent into said cabinet, a pair of boxes in said cabinet each respectively connected to one of said conduits, a third conduit interconnecting said boxes, a blower in said third conduit operative to circulate air through said boxes and conduits and said tent, a sterilizing lamp in the box located adjacent the intake side of said blower, said last-named box and conduit connected thereto being arranged to preclude the light emitted by said lamp from entering within said tent, and refrigerating means in the box located adjacent the discharge side of said blower.

3. In combination, an oxygen tent into which raw oxygen is adapted to be injected, an air circulating system disposed exteriorly of said tent and forming a continuous passage including said tent, a cabinet provided with a rotatably and vertically adjustable bar thereon, said tent being carried by said bar, said system comprising a pair of flexible, extensible conduits leading from said tent into said cabinet, a pair of boxes in said cabinet each respectively connected to one of said conduits, a third conduit interconnecting said boxes, a blower in said third conduit operative to circulate air through said boxes and conduits and said tent, a sterilizing lamp in one of said boxes for sterilizing such circulated air, said one of said boxes and conduit connected thereto being arranged to preclude the light emitted by said lamp from entering within said tent, and refrigerating means in the other of said boxes for cooling and thus condensing moisture from such circulated air.

4. In combination, an oxygen tent into which raw oxygen is adapted to be injected, an air circulating system disposed exteriorly of said tent

and forming a continuous passage including said tent, a cabinet provided with a bar projecting therefrom, said tent being supported by said bar, said system comprising a pair of conduits leading downwardly from one end of said tent into said cabinet, a first horizontally disposed elongated box in said cabinet having one end connected to the lower end of one of said conduits, a second box in said cabinet having one end connected to the lower end of the other of said conduits and having its other end terminating short of the other end of said first box, a third conduit interconnecting such other ends of said boxes, a blower in said third conduit operative to circulate air through said boxes and conduits and said tent, a horizontally disposed tubular sterilizing lamp in said first box for sterilizing such circulated air, and refrigerating means in said second box for cooling and thus condensing moisture from such circulated air.

5. In a combination, a cabinet having a compressor type refrigerator therein including a compressor, a fan, a condenser, and a receiver disposed in the lower portion of said cabinet and an evaporator disposed in the upper portion of said cabinet, a first box disposed in the upper portion of said cabinet forming a chamber about said evaporator, a first conduit on the upper side of said first box adjacent one end thereof leading upward through the top of said cabinet, a second box on top of said first box having one end projecting beyond the other end of said first box, a second conduit on the upper side adjacent the other end of said second box leading upward through the top of said cabinet, a third conduit interconnecting the lower side of such projecting end of said second box and the said other end of said first box, an oxygen tent disposed exteriorly of said cabinet and having one end connected to said first and second conduits, means on said cabinet for supporting said tent, a blower in said third conduit operative to circulate air through said boxes and conduits and said tent, and a horizontally disposed tubular sterilizing lamp in said second box for sterilizing such circulated air, such circulated air being cooled and thus moisture condensed therefrom during its passage around said evaporator in said first box.

6. In combination, a cabinet having a compressor type refrigerator therein including a compressor, a fan, a condenser, and a receiver disposed in the lower portion of said cabinet and an evaporator disposed in the upper portion of said cabinet, a first box disposed in the upper portion of said cabinet forming a chamber about said evaporator, a first conduit on the upper side of said first box adjacent one end thereof leading upward through the top of said cabinet, a second box on top of said first box having one end projecting beyond the other end of said first box, a second conduit on the upper side adjacent the other end of said second box leading upward through the top of said cabinet, a third conduit interconnecting the lower side of such projecting end of said second box and said other end of said first box, an oxygen tent disposed exteriorly of said cabinet and having one end connected to said first and second conduits, means on said cabinet for supporting said tent, a blower in said third conduit operative to circulate air through said boxes and conduits and said tent, and a horizontally disposed tubular sterilizing lamp in said second box for sterilizing such circulated air, such circulated air being cooled and thus moisture condensed therefrom during its passage around said evaporator in said first box, said blower being so disposed that air drawn from said tent successively flows through said second box around said sterilizing lamp, through said first box around said evaporator, and then the thus purified and cooled air flows through said tent.

7. In combination, an oxygen tent into which raw oxygen is adapted to be injected, an air circulating system disposed exteriorly of said tent and forming a continuous passage including said tent, a cabinet provided with a vertically adjustable bar projecting horizontally therefrom, said tent being of flexible construction and supported on the horizontally projecting portion of said bar for lengthening and shortening movement therealong, said system comprising a pair of extensible conduits leading from said tent into said cabinet, a pair of boxes in said cabinet each respectively connected to one of said conduits, a third conduit interconnecting said boxes, a blower in said third conduit operative to circulate air through said boxes and conduits and said tent, a sterilizing lamp in one of said boxes for sterilizing such circulated air, said one of said boxes and conduit connected thereto being arranged to preclude the light emitted by said lamp from entering within said tent, and refrigerating means in the other of said boxes for cooling and thus condensing moisture from such circulated air.

8. In combination, an oxygen tent into which raw oxygen is adapted to be injected, an air circulating system disposed exteriorly of said tent and forming a continuous passage including said tent, a cabinet provided with a vertically adjustable bar projecting horizontally therefrom, said tent being supported by said bar, said system comprising a pair of extensible conduits leading from said tent into said cabinet, means forming a duct for air within said cabinet having one end connected to one conduit and the other end connected to the other conduit whereby air may flow from said tent through one conduit, said duct, and the other conduit into said tent, a blower in said system operative to circulate air through said conduits and duct as aforesaid, a sterilizing lamp in said duct for sterilizing such circulated air, said duct and conduits being arranged to preclude light emitted by said lamp from entering within said tent, and refrigerating means in said duct for cooling and thus condensing moisture from such circulated air.

CLIFFORD A. LEWIS.

REFERENCES CITED

The following references are of record in the file of this patent:

UNITED STATES PATENTS

Number	Name	Date
2,104,024	Conboie	Jan. 4, 1938
2,104,589	Hartman	Jan. 4, 1938
2,105,108	Crosley	Jan. 11, 1938
2,159,741	Kettering	May 23, 1939
2,165,449	Budd	July 11, 1939
2,183,387	Anderson	Dec. 12, 1939