United States Patent [19]

Patton et al.

[11] **3,800,277**

[45] **Mar. 26, 1974**

[54] **METHOD AND APPARATUS FOR SURFACE-TO-DOWNHOLE COMMUNICATION**

[75] Inventors: **Bobbie J. Patton**, Dallas; **James H. Sexton; John W. Harrell**, both of Duncanville, all of Tex.

[73] Assignee: **Mobil Oil Corporation**, New York, N.Y.

[22] Filed: **July 18, 1972**

[21] Appl. No.: **272,838**

[52] **U.S. Cl.** ..... **340/18 LD**, 73/152, 175/24, 175/26, 175/48, 166/66, 340/18 R, 340/222, 328/146

[51] **Int. Cl.** **G01v 1/40**, E21b 41/00

[58] **Field of Search** ..... 340/18 LD, 18 R, 421, 222; 175/25, 27, 38, 48, 50, 24; 166/66; 73/152; 328/148, 146

[56] **References Cited**

UNITED STATES PATENTS

3,517,553	6/1970	Williams et al.	166/66
3,527,961	9/1970	Palini	328/146
3,728,700	4/1973	Duval	340/421
3,324,717	6/1967	Brooks et al.	175/48
3,461,978	8/1969	Whittle	175/27
3,675,727	7/1972	Clark	175/27
3,593,807	7/1971	Klima	175/27
3,552,502	1/1971	Wilson	175/38

Primary Examiner—Maynard R. Wilbur
Assistant Examiner—H. A. Birmiel
Attorney, Agent, or Firm—A. L. Gaboriault; George W. Hager, Jr.

[57] **ABSTRACT**

Downhole operations within a well borehole are controlled by utilization of various communication channels within the borehole. The conditions within these communication channels are detected downhole and are applied to downhole comparators. Whenever the condition with a communication channel is changed by an operator on the earth's surface so that it exceeds a reference value, the comparator provides an output signal. A control gate selectively combines the output signals from the comparators to provide control signals for utilization in the control of the downhole operations.

16 Claims, 10 Drawing Figures

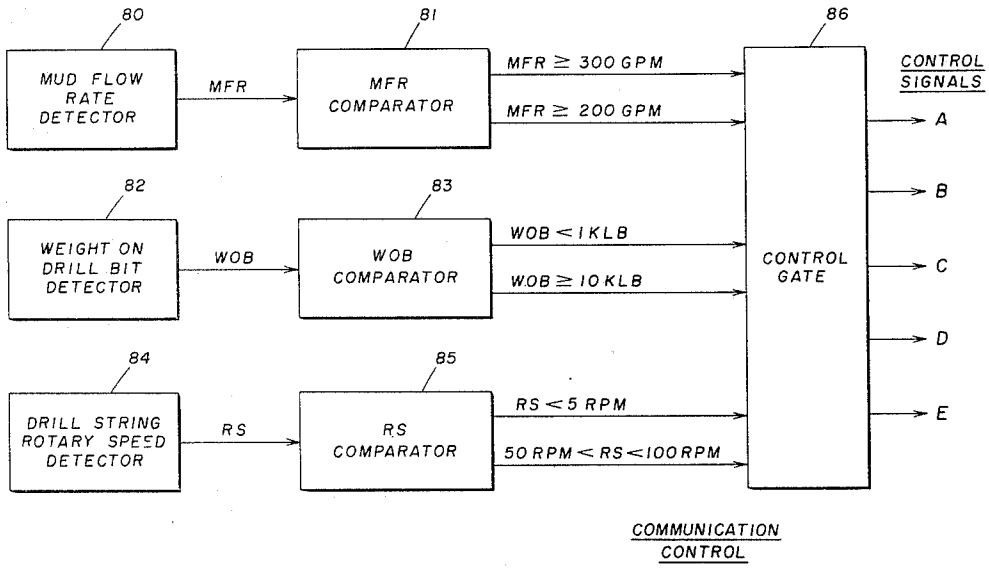

FIG. 1

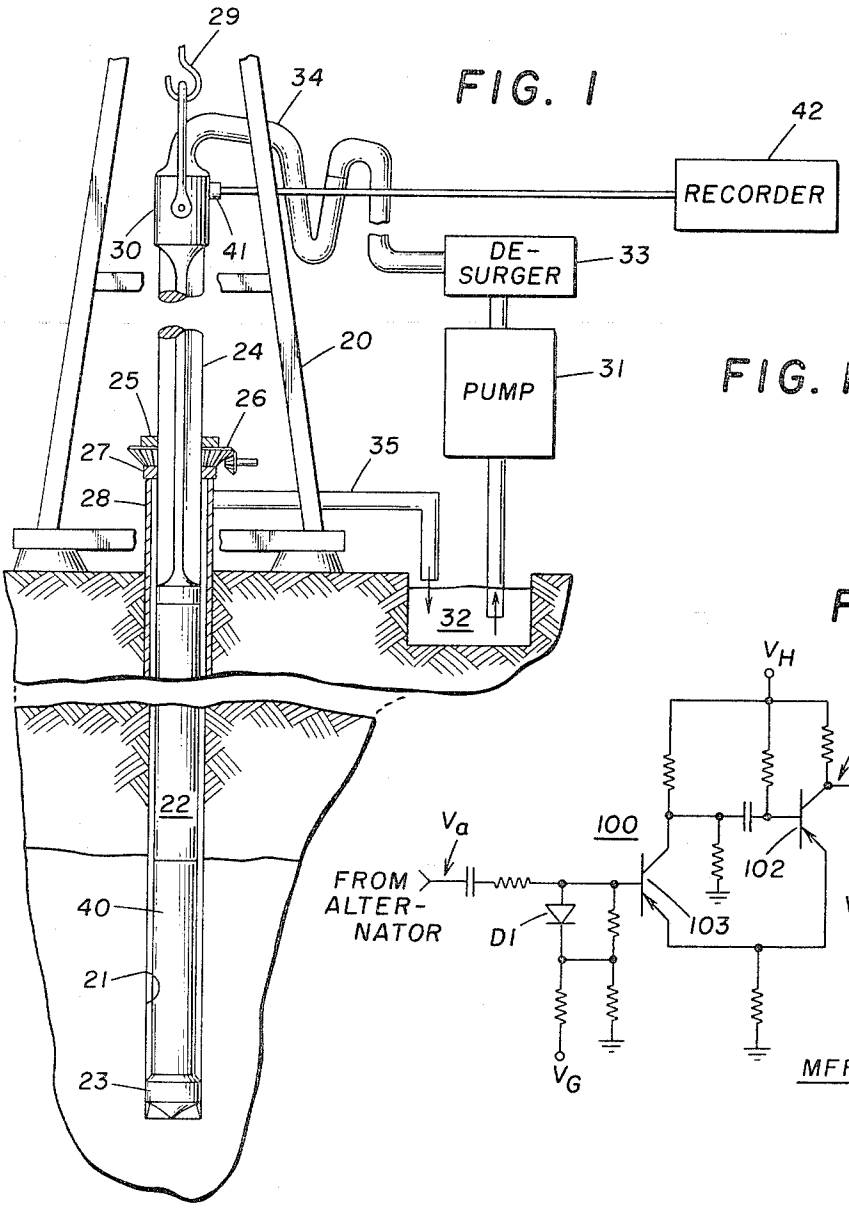

FIG. 10

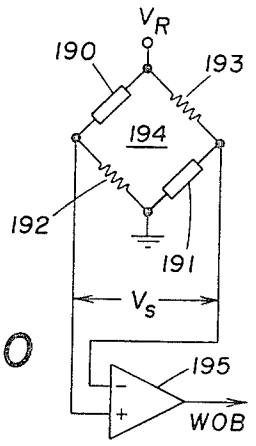

WOB DETECTOR

FIG. 5

MFR DETECTOR

FIG. 7

WOB INTEGRATOR

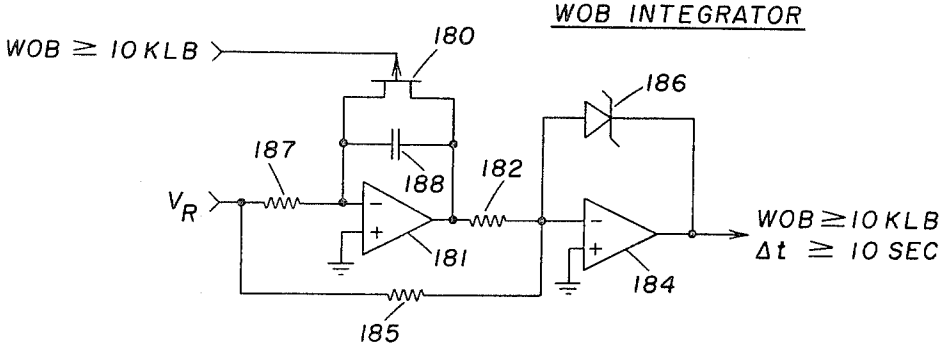

FIG. 2

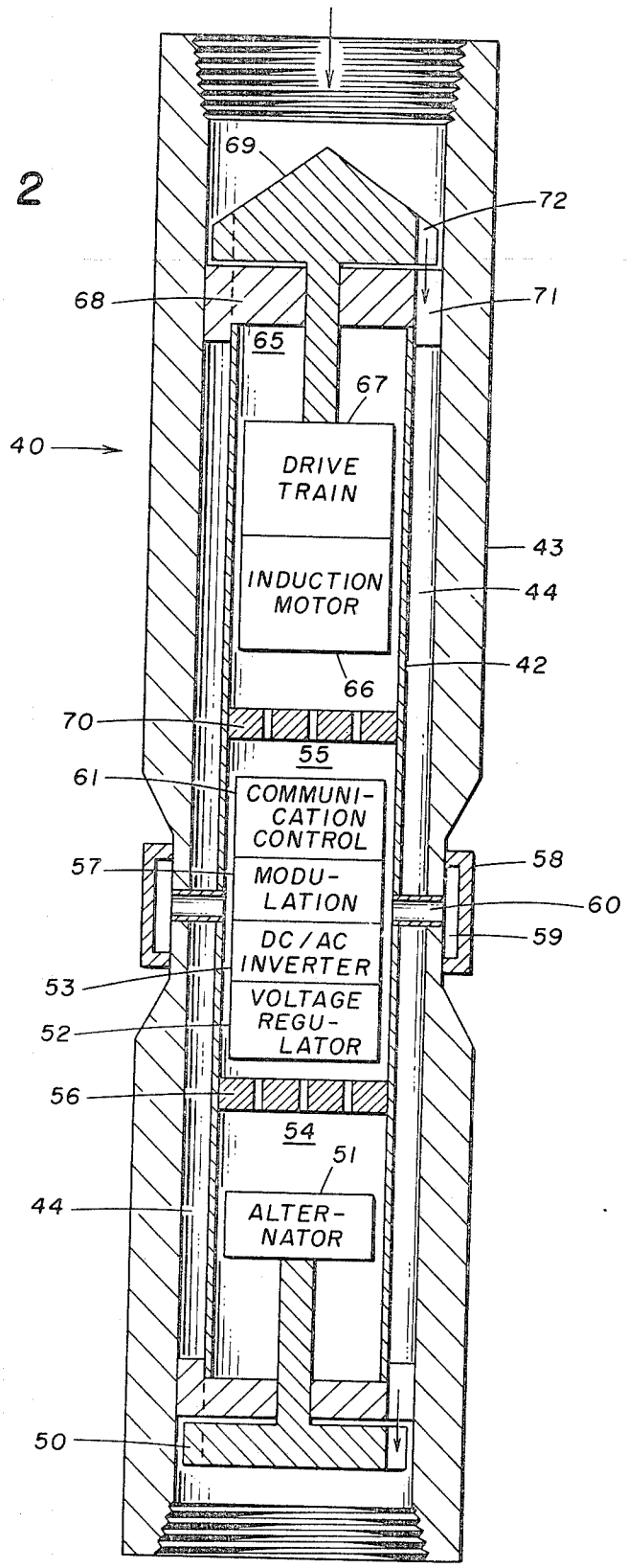
69
72
68
71
65
67
40
DRIVE TRAIN
43
INDUCTION MOTOR
44
42
66
70
55
61
COMMUNI-CATION CONTROL
57
MODU-LATION
58
60
DC/AC INVERTER
59
53
VOLTAGE REGU-LATOR
52
56
54
51
44
ALTER-NATOR
50

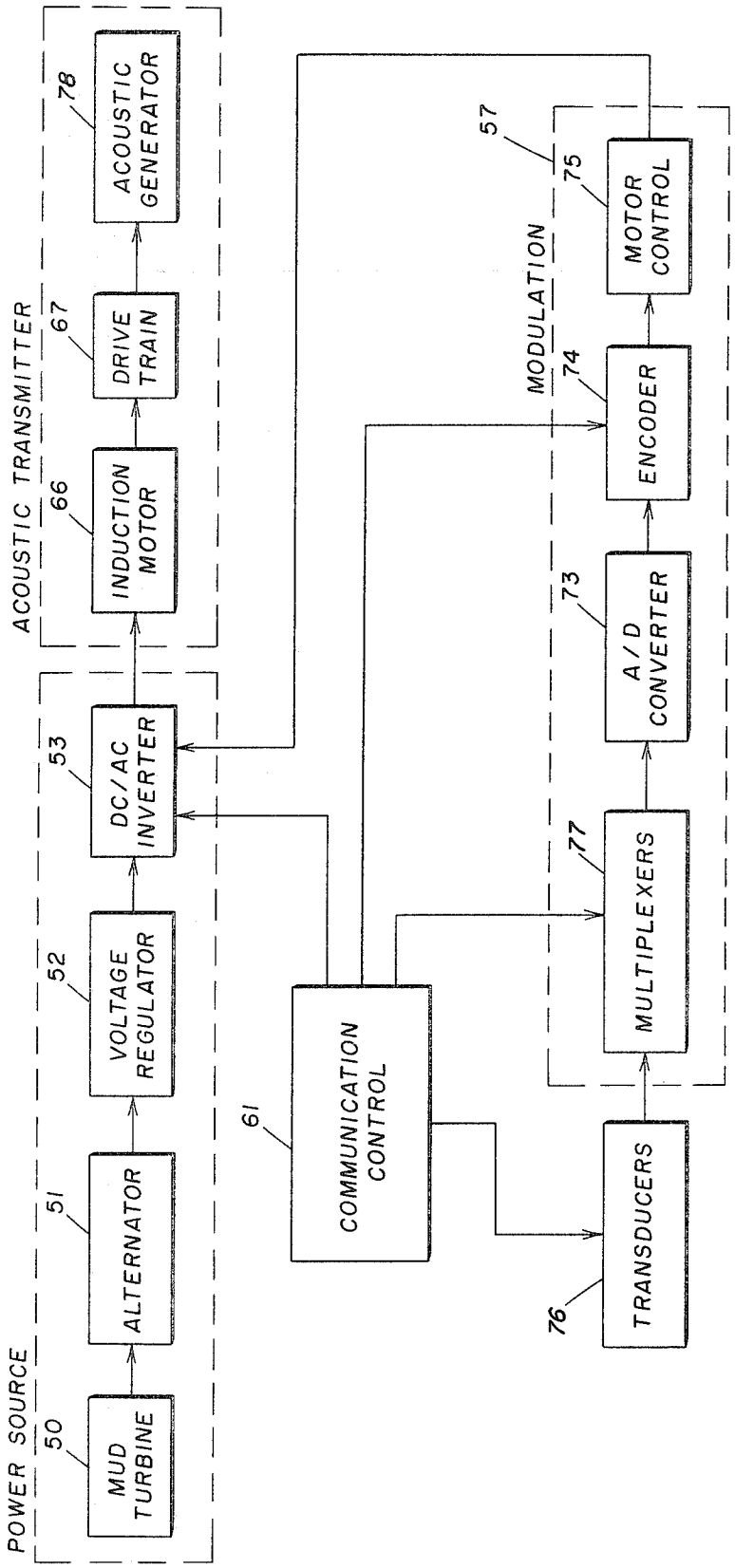
POWER SOURCE
50
MUD TURBINE
51
ALTERNATOR
52
VOLTAGE REGULATOR
53
DC/AC INVERTER
ACOUSTIC TRANSMITTER
66
INDUCTION MOTOR
67
DRIVE TRAIN
78
ACOUSTIC GENERATOR
61
COMMUNICATION CONTROL
MODULATION
57
75
MOTOR CONTROL
74
ENCODER
73
A/D CONVERTER
77
MULTIPLEXERS
76
TRANSDUCERS

FIG. 3

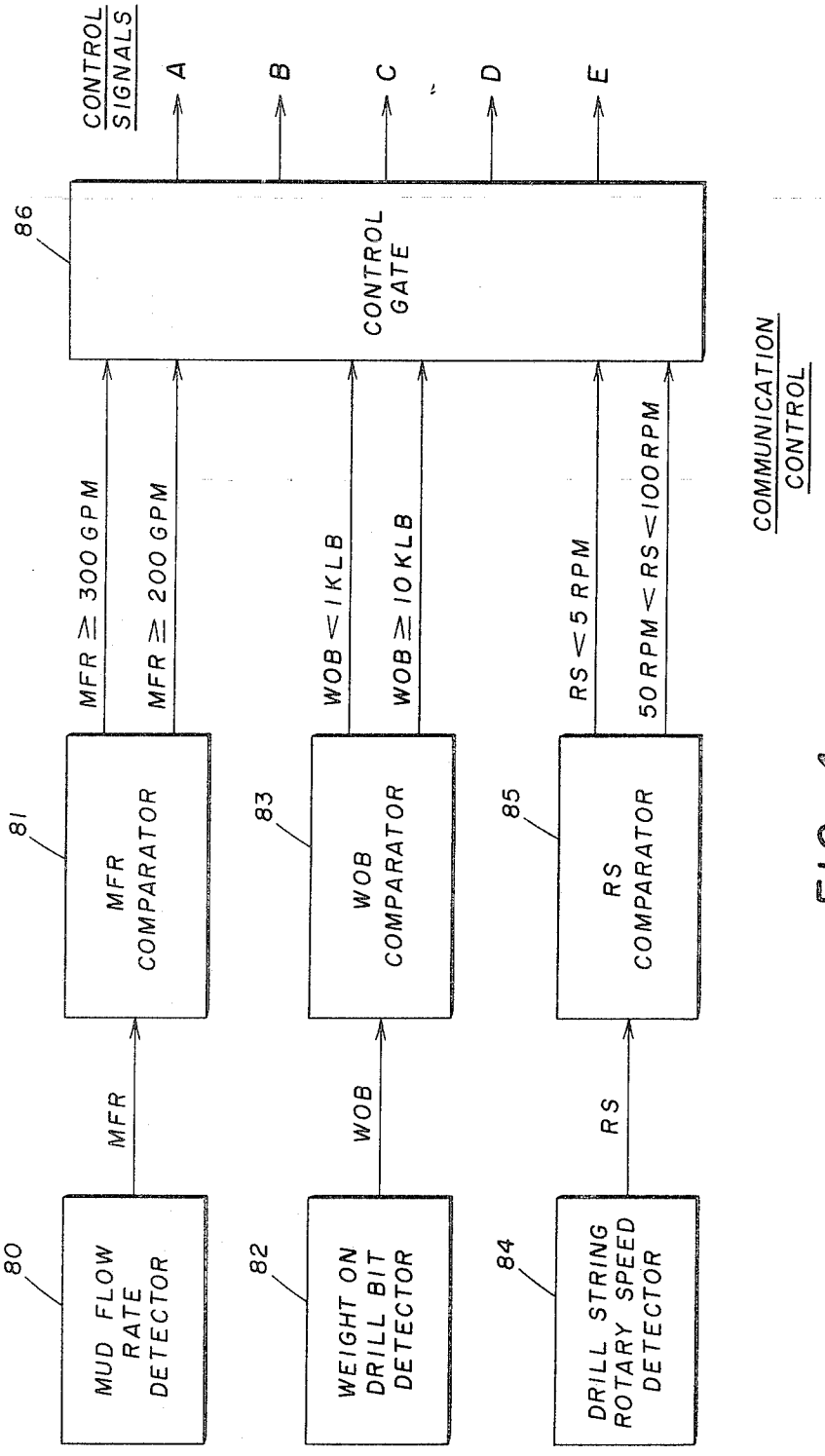
CONTROL SIGNALS
A
B
C
D
E
86
CONTROL GATE
COMMUNICATION CONTROL
MFR ≥ 300 GPM
MFR ≥ 200 GPM
WOB ≤ 1 KLB
WOB ≥ 10 KLB
RS ≤ 5 RPM
50 RPM ≤ RS ≤ 100 RPM
81
MFR COMPARATOR
83
WOB COMPARATOR
85
RS COMPARATOR
MFR
WOB
RS
80
MUD FLOW RATE DETECTOR
82
WEIGHT ON DRILL BIT DETECTOR
84
DRILL STRING ROTARY SPEED DETECTOR

FIG. 4

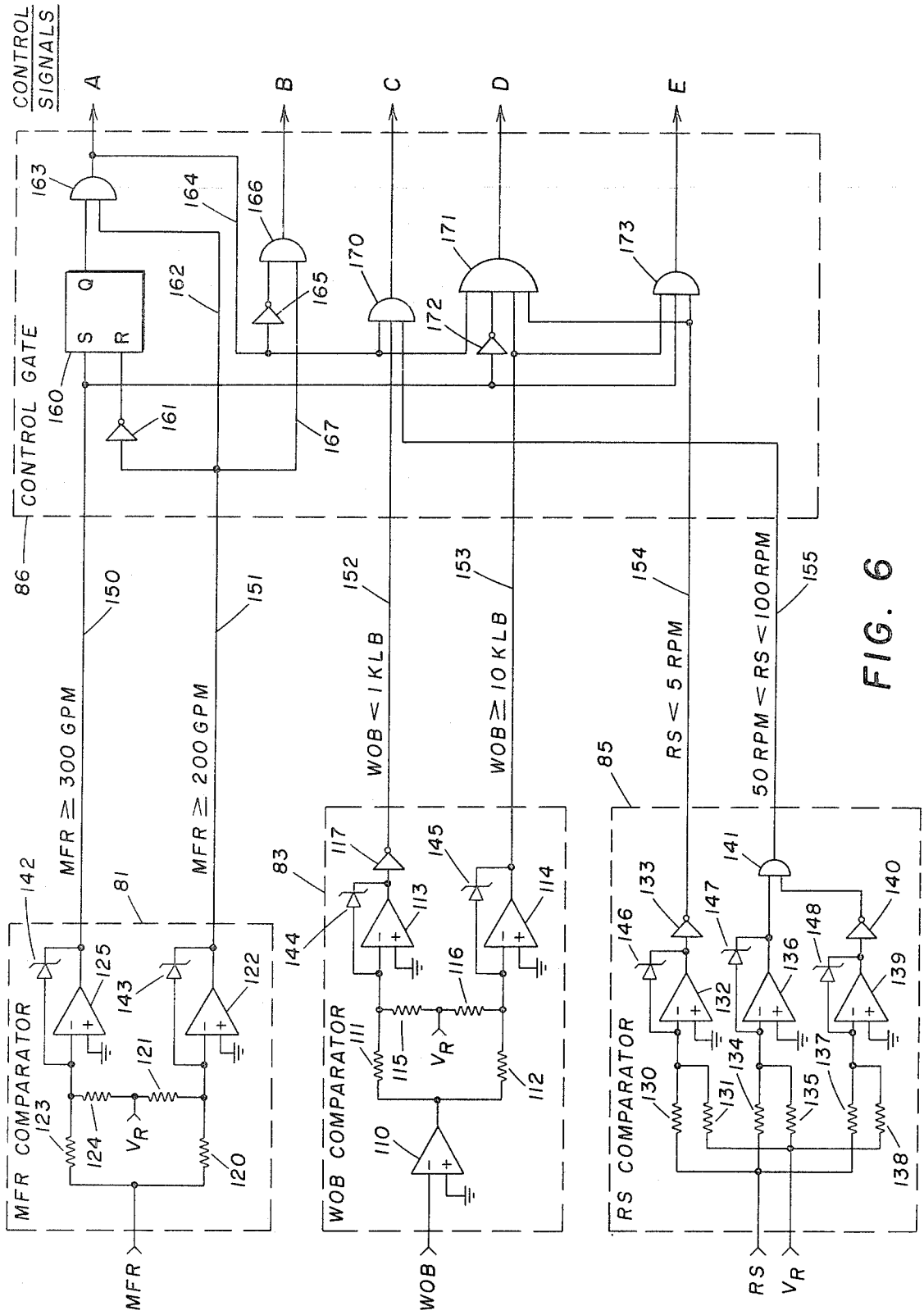
CONTROL SIGNALS
A
B
C
D
E
CONTROL GATE
86
163
164
166
162
165
170
171
172
173
160
161
167
S
R
Q
150
151
152
153
154
155
MFR ≥ 300 GPM
MFR ≥ 200 GPM
WOB < 1 KLB
WOB ≥ 10 KLB
RS < 5 RPM
50 RPM < RS < 100 RPM
MFR COMPARATOR
81
142
125
143
122
121
123
124
120
V_R
MFR
WOB COMPARATOR
83
117
145
113
114
144
116
111
115
112
110
WOB
RS COMPARATOR
85
133
147
141
146
148
140
136
132
139
130
131
134
135
137
138
RS
V_R

FIG. 6

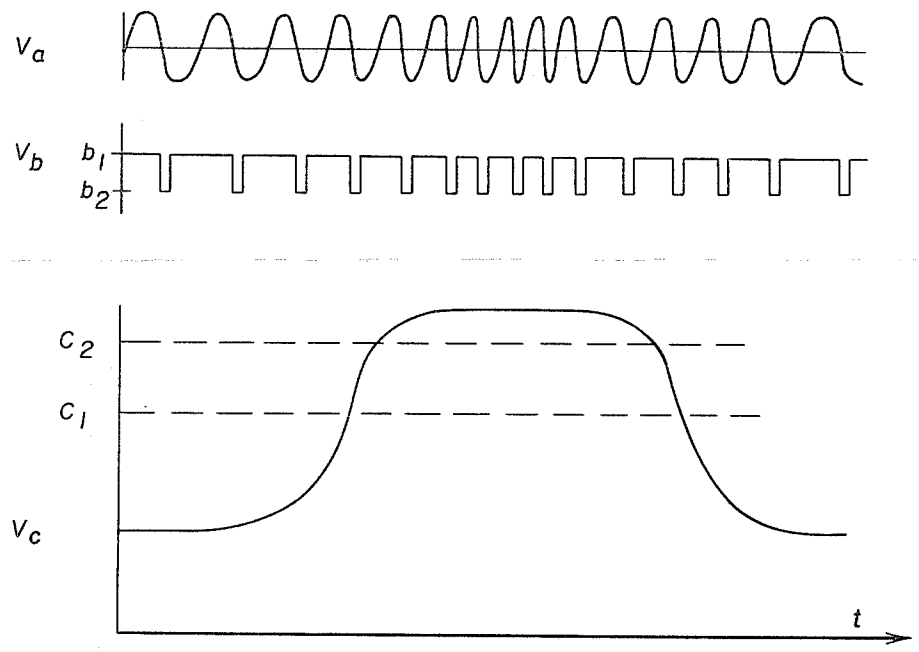

FIG. 8

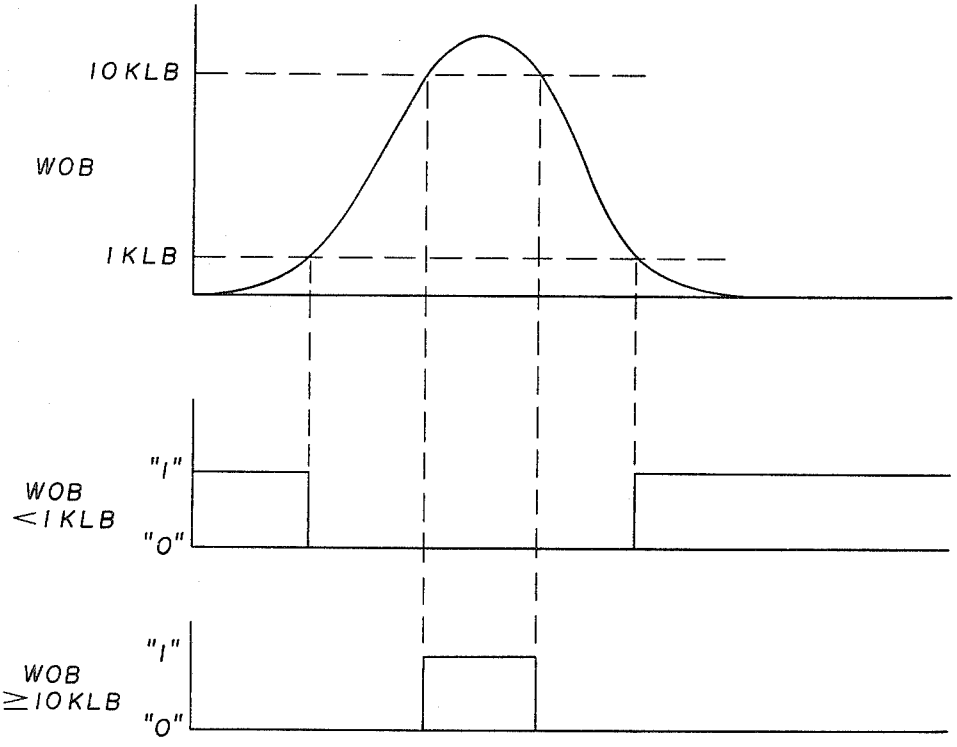

FIG. 9

METHOD AND APPARATUS FOR SURFACE-TO-DOWNHOLE COMMUNICATION

BACKGROUND OF THE INVENTION

This invention relates generally to logging while drilling wherein control of downhole operations within a borehole are effected from the surface of the earth. More particularly, control signals are telemetered to a downhole tool by means of the communication channels afforded by the various operating parameters.

In the past, a conventional practice in the logging of a borehole has been to apply electric current from a suitable source aboveground through an insulated conductor extending into the borehole to sensing apparatus. The sensing apparatus provides a signal in the insulated conductor representative of the characteristic measured within the borehole. The provision and maintenance of such an insulated conductor for logging the borehole while simultaneously drilling the borehole has been found to be impractical.

More recently, logging-while-drilling systems have been employed which do not require an insulated conductor in the borehole at any time for logging operations. In one such system, the sensing apparatus located within the borehole transmits the logging measurements by means of an acoustic wave passing upward through the drill string. An example of such a system is disclosed in U.S. Pat. No. 2,810,546 to B. G. Eaton et al. In another such system the drilling liquid within the borehole is utilized as the transmission medium for the information-bearing acoustic waves. An example of such a system is disclosed in U.S. Pat. No. 3,309,656 to John K. Godbey. In the Godbey system, drilling fluid is continuously circulated downward through the drill string and drill bit and upward through the annulus provided by the drill string and the borehole wall, primarily for the purpose of removing cuttings from the borehole. An acoustic transmitter located downhole continuously interrupts the flow of the drilling fluid, thereby generating an acoustic wave in the drilling fluid. The acoustic wave is modulated with information measured downhole by sensing apparatus, and the modulated acoustic wave is telemetered uphole through the drilling fluid to suitable recording equipment.

In order to control the downhole drilling and logging operations, it has long been the practice to stop the operations and remove the drill string from the well for the purpose of changing or switching from one type of operation to another. The advantages of being able to control and change such downhole operations from the surface of the earth without stopping the operations and removing the drill string from the borehole are obvious.

SUMMARY OF THE INVENTION

In accordance with one aspect of the invention, downhole operations, that is, operations at any point along the length of the borehole, are carried out by controlling various conditions within the logging-while-drilling system. Changes in these conditions are initiated at the surface of the earth and are detected at a downhole location within the borehole. Output signals, produced downhole in response to these changes, are selectively combined to provide for a plurality of control signals which are utilized to control the downhole operations.

In another aspect, the output signals are of a first state when the absolute value of the condition within the communication channel exceeds a reference value and of a second state when the absolute value of the condition within the communication channel does not exceed the reference value.

In a further aspect, the output signals are of a first state when the time integral of the condition within the communication channel exceeds a reference value and of a second state when the time integral of the condition within the communication channel does not exceed the reference value.

More particularly, at least one reference signal is provided for each of the communication channels. Output signals will be produced based upon the comparison of the condition within the communication channel or its time integral with the corresponding reference signal, the output signals for each communication channel being equal in number to the number of reference values provided for each communication channel. These output signals are selectively connected to a plurality of gates which provide the plurality of control signals in accordance with the logic states of the selected output signals to which they are connected.

BRIEF DESCRIPTION OF THE DRAWINGS

FIG. **1** illustrates a well drilling system adapted to simultaneously drill and log a well.

FIG. **2** is a cross-sectional view of a borehole logging tool utilized in a logging-while-drilling system.

FIG. **3** is a block diagram illustrating the components housed within the borehole logging tool of FIG. **1**.

FIG. **4** is a block diagram illustrating the communication control system of the present invention.

FIGS. **5–7** and **10** are detailed electrical schematics of the components of the communication control system of FIG. **4**.

FIGS. **8** and **9** illustrate the waveforms of the signals appearing at the designated points in the electrical schematics of FIGS. **5** and **6**.

DESCRIPTION OF THE PREFERRED EMBODIMENT

In accordance with the present invention a communication control system is provided for controlling the downhole operations at any point along the length of the borehole in a logging-while-drilling system. Signals are telemetered to a downhole tool by means of communication channels which can be controlled either automatically or by an operator from the surface of the earth. Such signals are detected downhole and utilized to provide the necessary control for the downhole operations.

A brief description of a conventional rotary drilling apparatus with which this invention can be used will be given prior to the detailed description of the invention itself. In FIG. **1** there is shown a derrick **20** located over a well **21** being drilled in the earth by rotary drilling. A drill string **22** is suspended within the well **21** from the derrick **20**. The drill string **22** includes a plurality of sections of drill pipe with one or more drill collars and a drill bit **23** secured at its lower end and a kelly **24** secured at its upper end. Kelly **24** extends through and is rotatably engaged by rotary table **25**. A suitable prime mover (not shown) drives a member **26** which rotatably engages the rotary table **25**, thereby rotating the drill string **22** within the well **21**. The member **26** is su-

perimposed directly above the wellhead 27. The wellhead 27 is secured to a casing 28 which is cemented into position a short distance into the well 21. A hook 29 is connected to the kelly 24 through a rotary swivel 30. Hook 29 is attached to a traveling block (not shown) which in turn is suspended by a suitable cable (also not shown). The rotary swivel permits rotation of the drill string relative to the hook and traveling block.

The swivel 30 also forms a fluid connection between a source of drilling fluid, such as mud, and the drill string 22. A pump 31 transfers the drilling fluid from a pit 32 in the earth through a desurger 33, which is adapted to suppress noise in the drilling fluid, and a flexible hose 34 into the swivel 30. The drilling fluid then flows downwardly into the drill string 22 and exits through openings in the drill bit 23 into the well 21. The drilling fluid then circulates upwardly from the drill bit 23 carrying formation cuttings through the annulus between the drill string 22 and the well 21 to the surface of the earth. A pipe 35 is connected to the casing 28 for returning the drilling fluid from the well 21 to the pit 32.

Located within the drill string 21 near the drill bit is a downhole logging tool 40 which includes one or more transducers for measuring downhole conditions and an acoustic transmitter which produces an acoustic signal in the drilling fluid representative of the downhole conditions. This acoustic signal is telemetered uphole through the drilling fluid where it is received by one or more transducers 41 mounted on the swivel 30. The signals from transducers 41 are applied to a recording system 42 which provides readout functions representative of the measured downhole conditions.

The downhole logging tool 40 is illustrated in detail in FIG. 2. The downhole logging tool 40 is formed by an inner housing 42 located within an outer housing 43. The inner and outer housings define an annulus 44 through which drilling mud passes during drilling operations. The upper and lower ends of the outer housing 43 are threaded for connection into a drill string. Within the inner housing 42 are contained the operating parts of the logging-while-drilling system, the power source, the modulation section, the acoustic transmitter, and the communication control section.

The power requirements for the acoustic transmitter are derived from a power source comprising the mud turbine 50, the alternator 51, the voltage regulator 52, and the DC/AC inverter 53. The mud turbine 50 is located immediately below the lower section 54 and the alternator 51 is located within the lower section 54. During the drilling operations, drilling fluid, preferably "mud", is continuously circulated through the drill bit by a positive displacement pump located aboveground, primarily to remove cuttings from the hole and prevent blowout. There is substantial hydraulic power in this drilling mud. In the logging-while-drilling system, this drilling mud is passed through the annulus 44, and the hydraulic power is converted to mechanical power by means of the mud turbine 50. Mud turbine 50 drives the alternator 51 to convert the mechanical power to AC electrical power. Located within a middle section 55 is the voltage regulator 52 which rectifies and filters the AC power output from the alternator 51 and provides a regulated DC power output. The DC/AC inverter 53 converts the DC power into suitable AC power for starting and operating the acoustic transmitter. The middle section 55 is sealed from the lower section 54 by means of bulkhead 56. The electrical connection from the alternator 51 to the voltage regulator 52 passes through this bulkhead.

Located near and in communication with middle section 55 are the various types of transducers used to convert such downhole conditions as fluid pressures and temperatures, drilling conditions and parameters, and formation characters into analog electrical signals. These analog signals are applied to the modulation section 57 for conversion into digital signals for use in modulating the acoustic transmitter. The collar 58 surrounding the outer housing 43 provides a compartment 59 within which the transducers may be located. The transducers communicate with the modulation section 57 by means of the channel 60 leading from compartment 59 into the middle section 55.

Also located within the middle section 55 is the communication control section 61 which will be described in detail hereinafter.

Located within an upper section 65 is an induction motor 66 and a drive train 67. An acoustic generator comprising a fixed stator 68 and a rotary valve 69 is located immediately above the upper section 65. These four components, induction motor 66, drive train 67, stator 68, and rotary valve 69, comprise the acoustic transmitter. Rotary motion of the rotary valve 69 is initiated and maintained by the induction motor 66 which is connected rigidly to the rotating valve through the drive train 67. The induction motor 66 is electrically connected to the DC/AC inverter 53 through the bulkhead 70 which seals the middle section 55 from the upper section 65. The stator 68 and the rotary valve 69 have complementing slots 71 and 72. The rotor is in an open position when the slot 72 is rotated to a position which is in communication with the slot 71 of the stator 68. In this open position, the drilling mud will pass through the slots in the rotor and stator and through the annulus 44 to drive the turbine 50. The hydraulic power in the drilling mud is converted by the turbine 50 to mechanical power which in turn is converted to electrical power for rotating the rotary valve 69. As the valve 69 is rotated, it continuously interrupts the flow of mud, thereby generating the acoustic signal which travels upward through the mud column to the surface of the earth.

This acoustic signal may be modulated with the digital signals which represent the downhole condition measurements from the transducers. These digital signals are utilized within the modulation section 57 to control the frequency of the AC power applied to the induction motor 66 and, consequently, the speed of the induction motor. As it is the speed of the induction motor which determines the frequency of the acoustic signal, the acoustic signal is therefore frequency modulated in response to the digital signals representing the downhole conditions measured by the logging transducers. In this manner, modulated, continuous, acoustic waves travel uphole in the drilling mud and are received at the earth's surface and demodulated to provide a readout of the downhole conditions.

Referring now to FIG. 3 there are illustrated in flow diagram the details of the borehole logging tool illustrated in FIG. 2. As previously described, the mud turbine 50 converts the hydraulic power in the drilling mud to mechanical power for driving the alternator 51 which, preferably, is a three-phase, six-pole alternator. The three-phase, AC power from the alternator 51 is

applied to a voltage regulator **52** which rectifies and filters the AC power output from the alternator **51** and provides a regulated DC voltage output. This regulated DC voltage is converted by a DC/AC inverter **53** into suitable AC power for starting and operating the induction motor **66** in the acoustic transmitter.

The downhole measurements of the transducers **76**, in analog form, are multiplexed by multiplexers **77** and are coded into binary digital words by an A/D converter **73**. Each digital word is converted into serial binary bits by an encoder **74** and applied to motor control **75** which in turn regulates the frequency of the AC power applied from the DC/AC inverter **53** to the induction motor **66**, consequently varying the speed of the induction motor **66** and thereby modulating the acoustic signal output from the acoustic generator **78** in accordance with the digital information applied to the motor control circuit **75**.

An example of the type of borehole logging tool illustrated in FIG. **2** and discussed so far in relationship to FIG. **3** is set forth in U.S. Pat. No. 3,309,656 to John K. Godbey. For a more detailed description of the mechanical and electrical features of such a borehole logging tool, reference may be had to the aforementioned patent to Godbey.

Having now described both the mechanical and electrical features of an example of a conventional logging-while-drilling system to which the communication control of the present invention may be best directed, there will now be described in detail, in connection with FIGS. **4–9**, a preferred embodiment of the communication control of the present invention.

Referring now to FIG. **4**, there is illustrated a block diagram of the communication control of the present invention comprising a mud flow rate detector **80** and a mud flow rate comparator **81**, a weight-on-drill-bit detector **81** and a weight-on-drill-bit comparator **83**, a drill string rotary speed detector **84** and a drill string rotary speed comparator **85**, and a control gate **86**.

The flow rate of the drilling fluid, preferably, mud, through the drill string is controlled from the pump **31** on the surface of the earth. This flow rate may be utilized as one of the communication channels from the surface of the earth to the downhole equipment. The mud flow rate detector **80** provides an electrical signal MFR which is proportional to the flow rate of the drilling mud, and such MFR signal is applied to mud flow rate comparator **81**. Mud flow rate comparator **81** provides, for example, two output signals. The first output signal is present whenever the mud flow rate is equal to or exceeds the rate of 200 gallons per minute. The second output signal is present whenever the mud flow rate is equal to or exceeds a flow rate of 300 gallons per minute.

A weight-on-drill-bit detector **82** provides a WOB signal which is proportional to the weight on the drill bit. This weight is controllable by means of the hook **29** and its associated traveling block (not shown). The WOB signal is applied to weight-on-drill-bit comparator **83** which may, for example, provide two output signals. The first output signal is present whenever the weight on the drill bit is less than 1,000 pounds. The second output signal is present whenever the weight on the drill bit is equal to or greater than 10,000 pounds.

The drill string rotary speed detector **84** provides an RS signal which is proportional to the rotary speed of the drill string. The rotary speed of the drill string is directly controllable by means of the prime mover which drives the member **26** which in turn rotatably engages the rotary table **25** for rotating the drill string **22**. The RS signal is applied to drill string rotary speed comparator **85** which, for example, may provide two output signals. The first output signal will be present whenever the rotary speed is less than five revolutions per minute. The second output signal will be present whenever the rotary speed exceeds **50** revolutions per minute but is less than 100 revolutions per minute.

Each of the output signals from the three comparators **81, 83,** and **85** is applied to a control gate **86**. Control gate **86** selectively combines these signals to provide for a plurality of control signals represented by the legends A–E.

It can be appreciated that the mud flow rate comparator **81**, for example, may be designed to provide for any number of outputs depending upon the number of mud flow rate levels for which an output signal is desirable, the two output signals for flow rates of 200 gallons per minute and 300 gallons per minute merely being used as examples. Similarly, the weight-on-bit comparator **83** and the drill string rotary speed comparator **85** may each be designed to provide for any number of output signals based upon the number of levels of weight on bit and rotary speed for which output signals are desirable.

In like fashion, the control gate **86** may be designed to combine the output signals from the comparators in various selective combinations to provide the desirable control signals, the control signals A-E being illustrative of five such control signals.

It can therefore be seen that the three communication channels illustrated in FIG. **4**, that is, mud flow rate, weight on drill bit, and rotary speed of the drill string, may be utilized to provide for a plurality of control signals at a downhole location for controlling the operation of the downhole equipment.

There is illustrated in FIG. **5** the detailed schematic diagram of a mud flow rate detector **80**. Input to the mud flow rate detector **80** is supplied by one of the three outputs of the three-phase alternator **51**. The frequency of each of the three-phase components of the input voltage is proportional to the speed of the shaft of alternator **51** and, consequently, proportional to the speed of the mud turbine **50**. This relationship is as follows:

$$f = (P/2)(M/60) \tag{1}$$

where,

f = frequency in Hz,

P = number of poles, and

M = speed of shaft in rpm.

This input is represented by the waveform V_a in FIG. **8**.

Mud flow rate detector **80** comprises a monostable multivibrator section **100** and a low-pass filter section **101**. Monostable multivibrator **100** is biased such that the collector voltage of the output transistor **102** is at zero volts when the multivibrator is in the OFF condition. Each time the input V_a passes through zero volts in the negative-going direction, transistor **103** is triggered and the monostable multivibrator **100** provides a fixed amplitude and fixed pulse width digital signal V_b

at the output of transistor 102, the period of digital signal V_b thereby being the same as the period of the alternating current input V_a. Digital signal V_b, as illustrated in FIG. 8, varies between the limits of b_1 when the monostable multivibrator 100 is in the OFF condition to a level of b_2 when the monostable multivibrator 100 is triggered. Upon triggering of monostable multivibrator 100, the digital signal V_b remains at the b_2 level for a period in the order of one millisecond. Digital signal V_b is applied to the minus input of the inverting amplifier 104 of the low-pass filter section 101. The low-pass filter section 101 generates an output signal V_c which is a DC voltage with amplitude proportional to the period of the digital signal V_b. Output signal V_c thereby directly represents the mud turbine speed as set forth in Equation (1) above and is therefore proportional to the power available for starting and operating the acoustic transmitter. A sample waveform for the output signal V_c is illustrated in FIG. 8. The level c_1 represents the voltage level at which the turbine reaches a speed representative of a mud flow rate of, for example, 200 gallons per minute, and the level c_2 represents the voltage level at which the turbine reaches a speed representative of a mud flow rate of, for example, 300 gallons per minute. This output signal V_c from the low-pass filter section 101 is applied by way of the inverting amplifier 105 as the MFR signal to the mud flow rate comparator 81.

The weight-on-drill-bit detector 82 provides the WOB signal which is proportional to the weight on the drill bit. This weight is controlled from the earth's surface by raising and lowering the hook 29 by means of the associated traveling block (not shown).

As the weight on the drill bit is increased and decreased there are corresponding increases and decreases in strain in the outer housing 43 of the downhole logging tool 40. Such strain may be measured by conventional strain gauges mounted on the outer housing 43 within the compartment 59 formed by the collar 58. The gauges are mounted such that their sensitive axes are along the axis of the borehole tool. These strain gauges communicate with the communication control circuitry 61 within the middle section 55 by means of the channel 60.

There is illustrated in FIG. 10 the detailed schematic of the weight-on-drill-bit detector 82. Two strain gauges 190 and 191 form two opposite legs of a conventional resistive bridge 194. These two strain gauges are mounted on opposite sides of the outer surface of housing 43 within the compartment 59, that is, 180° removed from each other about the housing 43. The two remaining legs of the bridge 194 are formed by resistors 192 and 193. The resistors 192 and 193 are chosen so that the bridge 194 is balanced when the strain gauges 190 and 191 are under a no-load or no-stress condition. That is, the voltage V_s across the output of the bridge 194 is zero when the weight on the drill bit is zero.

As the weight on the drill bit is increased, there is an increase in compression in the outer housing 43. The resistance of the strain gauges 190 and 191 changes proportionately with this increase in compression, thereby producing the voltage V_s across the output terminals of the bridge 194. The voltage V_s is amplified by the inverting amplifier 195 to provide for the WOB signal which is directly proportional to the weight on the drill bit.

Such strain gauges 190 and 191 are state of the art components. A particularly suitable strain gauge is of the foil type in which a thin film of metal is deposited on an insulator. Other types of strain gauges such as wire and semiconductor gauges may also be utilized.

The drill string rotary speed detector 84 provides the RS signal which is proportional to the rotary speed of the drill string. This speed is controlled from the earth's surface by means of a prime mover (not shown) which drives the drill string through the rotary table 25 and the member 26. Such a means for detecting the rotary speed of the drill string is disclosed in U.S. Pat. No. 3,400,327 to James H. Sexton and Bobbie J. Patton.

The actual conditions of the three communication channels, mud flow rate, weight on drill bit, and drilling string rotary speed, are represented by the three signsls MFR, WOB, and RS. Other communication channels may be utilized also, but these three are used for illustrative purposes. The three signals MFR, WOB, and RS are then applied, respectively, to comparators 81, 83, and 85. Each of these comparators is illustrated in detail in FIG. 6. The weight-on-drill-bit comparator 83 has the WOB signal applied to the negative input of a unity gain inverting amplifier 110 which serves the function of changing the WOB signal from a positive level to a negative level. The output of amplifier 110 is coupled by way of resistors 111 and 112 to the negative input terminals of inverting amplifiers 113 and 114, respectively. A reference voltage V_R is applied by way of resistors 115 and 116 to the same negative input terminals of amplifiers 113 and 114, respectively. This reference voltage Vhd R is a positive voltage. Therefore, initially when there is no weight on the drill bit, the WOB signal is zero and a positive voltage is therefore applied by way of the voltage divider comprising resistors 111 and 115 to the negative input terminal of amplifier 113. This sets amplifier 113 to a logic "0" state. As weight is applied to the drill bit, the WOB signal increases in value, thereby causing the voltage level at the output of amplifier 110 to go negative, thereby decreasing the value of the positive input voltage to the negative input terminal of amplifier 113. The resistors 111 and 115 in the voltage divider are sized such that as the weight on the drill bit exceeds 1,000 pounds, the voltage applied to the negative input terminal of amplifier 113 becomes negative. At this point the inverting amplifier is switched to a logic "1" state. The output of inverting amplifier 113 is applied by way of inverter 117 to output line 152. As illustrated in FIG. 9 by the waveform WOB<1 KLB, a logic "1" signal appears on output line 152 whenever the weight on the drill bit is less than 1,000 pounds and a logic "0" signal appears on output line 152 whenever the weight on drill bit is greater than 1,000 pounds.

In similar fashion to the operation of amplifier 113, the voltage divider resistors 112 and 116 are sized such that amplifier 114 is set to a logic "0" state so long as the weight on the drill bit is less than 10,000 pounds. As the weight on the drill bit exceeds 10,000 pounds, the amplifier 14 is switched to th logic "1" state. Therefore, a logic "0" signal appears on output line 153 from comparator 83 whenever the weight on the drill bit is less than 10,000 pounds and a logic "1" signal appears whenever the weight on the drill bit is greater than 10,000 pounds. This is illustrated in FIG. 9 by the waveform WOB>10 KLB.

Mud flow rate comparator **81** is similar both in construction and operation to weight-on-drill-bit comparator **83**. The reference voltage V_R is again a positive-level voltage and the voltage divider formed by resistors **120** and **121** is such that the amplifier **122** is set to a logic "**0**" signal when the MFR signal indicates that the mud flow rate is less than 200 gallons per minute. When the mud flow rate exceeds 200 gallons per minute, the MFR signal increases negatively to such a level that the negative input terminal to amplifier **122** is supplied with a negative voltage, thereby switching amplifier **122** to a logic "**1**" state. Therefore, a logic "**1**" signal appears on output line **151** whenever the mud flow rate is greater than 200 gallons per minute.

In similar fashion, the voltage divider comprising resistors **123** and **124** is such that the amplifier **125** is set to a logic "**0**" state when the mud flow rate is less than 300 gallons per minute. When the mud flow rate exceeds 300 gallons per minute, the MFR signal increases to a negative level such that the voltage divider comprising resistors **123** and **124** provides a negative signal to the negative input terminal of amplifier **125**, thereby switching it to a logic "**1**" state. Therefore, a logic "**1**" signal appears on line **150** whenever the mud flow rate exceeds 300 gallons per minute.

The drill string rotary speed comparator **85** is coupled at its input to the RS signal which increases in a negative direction as the rotary speed of the drill string increases. The reference voltage V_R is again a positive-level voltage and the voltage divider resistors **130** and **131** are chosen such that so long as the rotary speed of the drill string is less than **5** RPM the RS signal is of such a level that the input to the amplifier **132** is a positive voltage, thereby setting amplifier **132** to a logic "**0**" state. As the rotary speed exceeds **5** RPM, the RS signal increases in the negative direction to such an extent that the voltage divider comprising resistors **130** and **131** applied a negative voltage to the negative input terminal of amplifier **132**, thereby switching it to a logic "**1**" state. The output of amplifier **132** is applied by way of inverter **133** to output line **154**. Therefore, a logic "**1**" signal appears on output line **154** whenever the rotary speed is less than 5 RPM.

Resistors **134** and **135** form a second voltage divider to which the RS signal and the reference voltage signal are applied. Whenever the RS signal is indicative of a rotary speed less than 50 RPM, a positive voltage is applied to the negative input terminal of amplifier **136**, setting it to a logic "**0**" state. When the rotary speed exceeds **50** RPM, the RS signal increases negatively to such an extent that a negative voltage is applied to the negative input terminal of amplifier **136**, thereby setting it to a logic "**1**" state. Resistors **137** and **138** form a third voltage divider to which the RS signal and the reference signal V_R are applied. So long as the rotary speed is less than 100 RPM, the RS signal is of such a level that a positive voltage is applied to the negative input terminal of amplifier **139**, thereby setting it to a logic "**0**" state. When the rotary speed exceeds 100 RPM, the RS signal increases negatively to such an extent that a negative voltage is applied to the negative input terminal of amplifier **139**, thereby setting it to a logic "**1**" state. The output of amplifier **139** is applied by way of inverter **140** to AND gate **141**. Also applied to AND gate **141** is the output of amplifier **136**. AND gate **141** provides a logic "**1**" signal on output line **155** whenever the rotary speed is between 50 RPM and 100 RPM.

It will be noted that Zener diodes **142–148** are connected in feedback loops from the output terminal to the negative input terminal of each of the amplifiers **113, 114, 122, 125, 132, 136,** and **139**. These Zener diodes serve the purpose of preventing the outputs of the amplifiers from going below zero volts or above a positive 5 volts, the outputs thereby being compatible with the input requirements of the logic circuitry of control gate **86**.

Each of these outputs from comparators **81, 83,** and **85** is applied by way of lines **150–155** to the control gate **86**. It can be noted from the previous description of comparators **81, 83,** and **85** that the logic level of the signals on lines **150–155** will be at a logic "**1**" whenever the communication channels are in the conditions represented by the legends identifying the lines **150–155** in FIG. **6**. That is, line **150**, for example will be at a logic "**1**" level whenever the mud flow rate is greater than 300 gallons per minute. These six lines **150–155** which represent two conditions for each of the three communication channels, mud flow rate, weight on bit, and rotary speed of the drill string, are selectively combined within the control gate **86** to provide five control signals A–E. If the mud flow rate is less than 200 gallons per minute, line **151** is at a logic "**0**" level. Line **151** is applied directly to AND gate **163** and is applied by way of inverter **161** to the reset terminal R of flip-flop **160**. Line **150** is applied to the SET input terminal S of the flip-flop **160**. When the mud flow rate is less than 200 gallons per minute, a logic "**1**" signal is applied to the reset terminal R of flip-flop **160**. This resets the Q output to a logic "**0**" state. When the mud flow rate then exceeds 200 gallons per minute, a logic "**0**" signal is applied to the reset terminal R, thereby removing the reset. When the mud flow rate exceeds 300 gallons per minute, line **150** applies a logic "**1**" signal to the S input terminal. The Q output terminal of flip-flop **160** is not set to a logic "**1**" by the leading edge of the logic "**1**" input to the S terminal. This Q output terminal of flip-flop **160** is applied to AND gate **163**. When the mud flow rate exceeds both 200 gallons per minute and 300 gallons per minute, both inputs to AND gate **163** are at a logic "**1**" level and AND gate **163** provides a control signal A of a logic "**1**" level. Further, control signal A remains at a logic "**1**" level so long as the mud flow rate, after initially exceeding 300 gallons per minute, remains above a **200**-gallon-per-minute level. The flip-flop **160** which was set to a logic "**1**" state by the mud flow rate exceeding 300 gallons per minute is not reset to a logic "**0**" state until the mud flow rate drops below 200 gallons per minute. At this point, the signal on line **151** drops to a logic "**0**" state and is applied by way of inverter **161** as a logic "**1**" reset signal to the reset terminal R of flip-flop **160**.

A second control signal B may be produced by combining control signal A with the MFR signal on line **151**. Control signal A is coupled by way of line **164** and inverter **165** to one input of AND gate **166**. The MFR signal on line **151** is applied by way of line **167** to the other input of AND gate **166**. The input to AND gate **166** on line **167** is a logic "**1**" level whenever the MFR signal on line **151** is at a logic "**1**" level, indicating that the mud flow rate is greater than 200 gallons per minute. The other input to AND gate **166** is at a logic "**1**"

level when the control signal A is at a logic "0" level, indicating that the mud flow rate has not exceeded 300 gallons per minute. Control signal B therefore is at a logic "1" level whenever the mud flow rate is greater than 200 gallons per minute and has not exceeded 300 gallons per minute since reaching 200 gallons per minute.

A third control signal C is produced by the selective combination of control signal A, the WOB signal on line **152**, and the RS signal on line **155**. Control signal C will be at a logic "1" level whenever all three inputs to the AND gate **170** are at a logic "1" level, thereby indicating that the mud flow rate has initially exceeded 300 gallons per minute and has not dropped below 200 gallons per minute, that the weight on drill bit is less than 1,000 pounds, and that the rotary speed of the drill string is greater than 50 RPM but is less than 100 RPM.

A fourth control signal D is produced by the selective combination of control signal A, the MFR signal on line **150**, the WOB signal on line **153**, and the RS signal on line **154**. The control signal D is at a logic "1" level whenever each of the four inputs to AND gate **171** is at a logic "1" level, thereby indicating that the mud flow rate has initially exceeded 300 gallons per minute and has then dropped below 300 gallons per minute but still exceeds 200 gallons per minute, that the weight on drill bit is greater than 10,000 pounds, and that the rotary speed is less than 5 RPM.

Finally, a fifth signal E is generated by the selective combination of the MFR signal on line **150**, the WOB signal on line **153**, and the RS signal on line **154**. Control signal E is therefore a logic "1" level whenever each of the three inputs to AND gate **173** is at a logic "1" level, indicating that the mud flow rate is greater than 200 gallons per minute, that the weight on bit is greater than 10,000 pounds, and that the rotary speed is less than 5 RPM.

The foregoing control signals A-E have been illustrated as examples of selective combinations of those signals on lines **150–155** which may be utilized to control downhole operations in a borehole.

In the foregoing description, surface-to-downhole communication is initiated by changing from the surface of the earth the conditions that exist in a plurality of communication channels and by detecting, at the downhole location, the changes to the absolute value of the conditions in the communication channels. In an alternate embodiment of the present invention, any one or more of the communication channels may have its condition time integrated and the integral of the parameter utilized as the communication channel. The example of turning the downhole acoustic transmitter ON above some desired flow rate has already been discussed. Another example which would illustrate the time integral aspect is that of turning the acoustic transmitter ON when the mud flow rate exceeds a certain rate and then to change the data communication format from some initial mode to a standard transmitting mode after a given interval of time. An example of this is the situation wherein the initial transmitting mode is one in which sync words may come more often than is desirable in the standard transmitting mode.

Referring now to FIG. **7** there is illustrated an integrator which may be effectively utilized with any one of the comparators **81, 83,** or **85** of FIG. **6.** For purposes of illustration, the integrator of FIG. **7** is shown as being controlled by the output of the weight-on-drill bit comparator **83.** Specifically, the output of amplifier **114** of the weight-on-drill-bit comparator **83** is applied from line **153** directly to an FET switch **180.** Switch **180** is utilized to set the amplifier **181** which time integrates the reference voltage V_R when the weight on bit is greater than 10,000 pounds and which resets the amplifier **181** to zero when the weight on bit is less than 10,000 pounds. Consequently, the amplifier **181** is zero when the signal on line **153** is logic "0" and is a smoothly increasing function from the moment the signal on line **153** become a logic "1". The output of amplifier **181** is negative and is fed through a resistor **182** to the input of an amplifier **184.** The negative input terminal of amplifier **184** is held at a positive voltage by resistor **185** until such time as the output voltage of amplifier **181** exceeds in a negative direction the value of the positive reference voltage V_R. At such time, the input to the amplifier **184** becomes negative and its output switches from a logic "0" state to a logic "1" state. A Zener diode **186** is connected in a feedback loop from the output of the amplifier **184** to its negative input terminal. The Zener diode serves the purpose of preventing the output of the amplifier **184** from going below zero volts or above a positive 5 volts. The values of the resistor **187** and capacitor **188** are selected to provide for an RC time constant of 10 seconds. When the weight on bit initially exceeds 10,000 pounds, a logic "1" signal is applied to the input of switch **180** and the 10-second time period begins to run. At the end of the 10-second time period, the amplifier **181** provides a negative output which triggers the amplifier **184** to a logic "1" state. If, during this 10-second time period the weight on bit drops below 10,000 pounds, the input to the switch **180** becomes a logic "0" signal and the switch **180** resets the amplifier **181,** thereby restarting the 10-second time period set by the RC time constant of resistor **187** and capacitor **188.** Therefore, the weight-on-bit integrator of FIG. **7** is a time integrator which is at a logic "1" state only after the weight on bit has exceeded 10,000 pounds for a continuous time period of 10 seconds or more.

Any number of communication channels may be time integrated in accordance with the foregoing example for the weight-on-drill-bit communication channel. The time integrals may be utilized either separately as control signals or in selective combinations with the output signals representing changes, with respect to a reference level, of the absolute value of the communication channel conditions. The control signals so-produced may be utilized to control a variety of downhole operations.

Control signal A has been illustrated as one example of a control signal which may be utilized to control the operation of the acoustic transmitter illustrated in FIGS. **2** and **3.** Control signal A may be applied as illustrated in FIG. **3** to the DC/AC inverter **53** to enable the DC/AC inverter **53** to apply required power to the induction motor **66** for starting the acoustic transmitter when the mud flow rate initially exceeds 300 gallons per minute. At such time as the mud flow rate thereafter drops below 200 gallons per minute, the DC/AC inverter **53** is disabled by control signal A and the induction motor **66** of the acoustic transmitter is shut down.

Another example of the utilization of the control signals is that of controlling, from the surface of the earth,

the information which is to be communicated upward by the acoustic transmitter. For example, transducer **76** might provide data relating to torque, weight on bit, temperature, resistivity, hole deviation, hole direction, gamma ray, etc. This information is multiplexed by means of multiplexers **77** and transmitted uphole by means of modulation of the acoustic transmitter. It may be desirable to select only certain of these downhole measured conditions for transmission uphole or at what times and in what sequence such measured conditions are transmitted uphole. The operator may wish to telemeter only one downhole measured condition for some period of time. In such case, the operator can, from the surface of the earth, signal downhole by means of the available communication channels to change the format of the multiplexers to permit transmission of only the desired downhole measured condition. It may, for example, be desirable to transmit this information only when drilling operations are ceased. Therefore, a control signal such as control signal D may be utilized wherein at least one of the communication channel conditions required for the production of control signal D is that the rotary speed of the drill bit string be less than 5 RPM.

In another example, it might be advantageous to initiate calibration of the downhole equipment from the surface of the earth. In this manner, the operator initiates calibration by producing, for example, the control signal C. Control signal C is applied to the multiplexer **77** to initiate transmission of calibration information under the condition wherein the mud flow rate is sufficient to permit acoustic transmitter operation, the weight on the drill bit is less than 1,000 pounds (that is, drilling operation has effectively ceased), and the rotary speed of the drill string is between 50 RPM and 100 RPM.

It may also be desirable to control the upward communication data rate. This may be carried out by changing the baud setting of the data transmission. The upward communication data rate is a function of signal strength which reduces with depth and other factors, thereby provision for changing the baud setting is advantageous so that a maximum data rate consistent with signal-to-noise ratio within the system may be maintained. An initial baud setting may be set by utilization of control signal B, for example. In this situation, the initial baud length is set when the mud flow rate exceeds 200 gallons per minute but has not yet reached 300 gallons per minute, under which circumstances the acoustic transmitter is OFF. If at any time after the acoustic transmitter is turned ON and it is desirable to change the initial baud setting, this may be accomplished by setting those drilling conditions which generate control signal E. Control signal E may be utilized, for example, to initiate a baud change when the weight on bit is greater than 10,000 pounds, the mud flow rate is greater than 300 gallons per minute, and the rotary speed of the drill string is less than 5 RPM. As the data communication rate is provided by the encoder **74** of the modulation unit, the initial baud setting and baud change controls may be initiated by applying the controls B and E, respectively, from the communication control section to the encoder **74**.

Another utilization of the control signals may be that of controlling the operation of the downhole transducers from the surface of the earth. For example, some of these transducers may consume excessive power from the electrical system and it may be desirable to operate these transducers only at selective time intervals, thereby saving electrical power. Such a control signal may be applied to the transducers **76** to carry out this desired control.

It is to be understood that the foregoing detailed description of the generation of the power required to operate the acoustic transmitter, of the transducers, and of the generation and modulation of the acoustic waves represents the operation of one embodiment of a borehole logging-while-drilling system suitable for control by the communication control system of the present invention. This communication control system may be utilized with various modifications to the power source, the acoustic transmitter, the transducers, and the modulation section without departing from the scope and spirit of the invention. Analog as well as digital communication may be utilized. Various modulation techniques such as, for example, amplitude modulation, frequency shift keying, or phase shift keying may be utilized.

It is to be further understood that the circuitry illustrated in detail in FIGS. **5, 6,** and **7** is merely representative of one embodiment of the communication control system of the present invention. In accordance with such embodiment, the following TABLE I sets forth specific types and values of the circuit components.

TABLE I

Reference Designation	Description
Transistors 102 and 103	2N2907 (Texas Instruments)
Diode D1	620 (Texas Instruments)
All inverting amplifiers	MC1556G (Motorola)
Flip-flop 160	SN7471 (Texas Instruments)
Switch (FET) 180	2N3993 (Motorola)
All Zener diodes	1N751 (Texas Instruments)
All inverters	SN7400 Series (Texas Instruments)
Strain guages 190 and 191	EA-06-250BB-500 (Micro-Measurements)
Voltage V_G	+15 volts DC
" V_H	−15 volts DC
" V_R	+5 volts DC

Various modifications to the disclosed embodiment of the communication control system itself, including variations in the types and values of circuit components, may become apparent to one skilled in the art without departing from the scope and spirit of the invention as hereinafter defined by the appended claims.

What is claimed is:

1. A method of controlling downhole operations in a logging-while-drilling system including a drill bit connected to a drill string through which a drilling fluid is circulated, comprising:

a. selecting from the surface of the earth the conditions of each of a plurality of operating parameters of the system,

b. measuring the conditions of each of said plurality of operating parameters at a downhole location and producing a plurality of output signals representing the conditions of said operating parameters,

c. producing at said downhole location a plurality of reference signals, at least one reference signal being produced for each of said operating parameters,

d. comparing said output signals with their corresponding reference signals,

e. producing first comparison signals of a first state when said output signals exceed the reference signals to which they are compared in step (d) and of a second state when said output signals do not exceed the reference signals to which they are compared in step (d),

f. gating selective combinations of said first comparison signals to produce a plurality of control signals when each comparison signal of a selected combination is of a required state, each said control signal being thereby produced in response to a plurality of the conditions selected in step (a) for each of said operating parameters, and

g. utilizing said control signals to control downhole operations.

2. The method of claim **1** further comprising:

a. producing a time integral for at least one of said output signals,

b. comparing said time integral with the reference signal corresponding to the operating parameter represented by said one of said output signals,

c. producing second comparison signals of a first state when said time integral exceeds the reference signal to which it is compared in step (b) and of a second state when the time integral does not exceed the reference signal to which it is compared in step (b), and

d. gating selective combinations of said first and second comparison signals to produce a plurality of control signals when said comparison signals of a selected combination are all of a required state, said control signals being thereby produced in response to both the conditions selected in step (a) for each of said operating parameters and the time periods during which said operating parameters remain in the selected conditions.

3. The method of claim **1** wherein one of the operating parameters, the condition of which is selectively controlled in step (a), is the weight of the drill bit.

4. The method of claim **1** wherein one of the operating parameters, the condition of which is selectively controlled in step (a), is the rotary speed of the drill string.

5. The method of claim **1** wherein one of the operating parameters, the condition of which is selectively controlled in step (a), is the flow rate of the drilling fluid.

6. A system for controlling, from the surface of the earth, a plurality of downhole operations in a drilling system, comprising:

a. a plurality of means located on the surface of the earth for controlling each of a plurality of the operating parameters of the drilling system,

b. a plurality of subsurface means for detecting the conditions of said plurality of operating parameters, and for producing output signals representative of said conditions,

c. a plurality of subsurface means for producing a plurality of reference signals, at least one reference signal corresponding to each of said output signals,

d. a plurality of subsurface means for comparing said output signals with their corresponding reference signals and for producing comparison signals of a first state when the output signals exceed their corresponding reference signals and of a second state when the output signals do not exceed their corresponding reference signals, and

e. subsurface means for selectively gating combinations of said comparison signals to provide for a plurality of control signals to be utilized in the control of downhole operations of the drilling system, whereby any one of said control signals may be produced by selectively controlling from the surface of the earth the conditions of the operating parameters of the drilling system such that each resulting comparison signal of a selected combination of comparison signals is of the required state to produce a control signal.

7. The system of claim **6** further including at least one integrator to which at least one of said output signals and its corresponding reference signal are applied, said integrator providing a time integral signal of a first state when the integral of said one of said output signals exceeds its corresponding reference signal for a predetermined time interval and of a second state when the integral of said one of said output signals does not exceed the reference signal for a predetermined time interval, said time integral signal being selectively applied to said plurality of gates along with said comparison signals, whereby said control signals may be produced by selectively controlling from the surface of the earth both the conditions of the operating parameters of the drilling system and the time periods during which said operating parameters remain in the selected conditions.

8. In a logging-while-drilling system employing a drill bit connected to a rotary drill string through which a drilling fluid is circulated by means of a surface pump, a plurality of downhole transducers for measuring the conditions of the operating parameters, and an acoustic transmitter for telemetering the information from the downhole location to the surface of the earth, the combination comprising:

a. means located on the earth's surface for selecting the conditions of the operating parameters of the logging-while-drilling system, said plurality of transducers producing output signals indicative of the selected conditions of each of said operating parameters,

b. means located downhole for producing a plurality of reference signals, at least one reference signal being produced for each of said operating parameters,

c. a plurality of first downhole comparators which compare said output signals with the corresponding reference signals and provide a plurality of first comparison signals, said first comparison signals being of a first state when the output signals exceed the corresponding reference signal and of a second state when the output signals do not exceed the corresponding reference signals, and

d. a plurality of gates to which said first comparison signals are selectively connected, said gates providing control signals each in accordance with the states of the selected combinations of the first comparison signals to which they are connected, said control signals being thereby provided to control various downhole operations of the logging-while-drilling system by selecting from the surface of the earth the conditions of the operating parameters.

9. The system of claim **8** further including:

a. means for producing time integrals of said output signals,

b. a plurality of second downhole comparators which compare said time integrals with the corresponding reference signals and for producing second comparison signals of a first state when said time integrals exceed said reference signals and of a second state when said time integral does not exceed said reference signals, and

c. a plurality of gates to which said second comparison signals are selectively connected for providing control signals in accordance with the states of the selected combinations of said second comparison signals, whereby said control signals are selectively produced by controlling from the surface of the earth the time periods during which said operating parameters remain in the selected conditions.

10. The system of claim **8** wherein at least one of said control signals is utilized to control operation of the downhole acoustic transmitter.

11. The system of claim **8** wherein at least one of said control signals is utilized to control the calibration of downhole equipment.

12. The system of claim **8** wherein at least one of said control signals is utilized to control the data rate of the information representing the measured downhole conditions and which is telemetered uphole by means of the acoustic transmitter.

13. The system of claim **8** wherein at least one of said control signals is utilized to control the sequence in which the measured downhole conditions are telemetered uphole by means of the acoustic transmitter.

14. The system of claim **8** wherein one of the operating parameters is the weight on the drill bit.

15. The system of claim **8** wherein one of the operating parameters is the rotary speed of the drill string.

16. The system of claim **8** wherein one of the operating parameters is the flow rate of the drilling fluid.

* * * * *

UNITED STATES PATENT OFFICE

CERTIFICATE OF CORRECTION

Patent No. 3,800,277 Dated March 26, 1974

Inventor(s) Bobbie J. Patton, James H. Sexton and John W. Harrell

It is certified that error appears in the above-identified patent and that said Letters Patent are hereby corrected as shown below:

Column 5, line 37, "detector 81" should be --detector 82--.
Column 8, line 16, "signsls" should be --signals--;
line 32, "voltage V hd R" should be --V_R--;
line 61, "amplifier 14" should be --amplifier 114--;
same line, "th logic" should be --the logic--.
Column 9, line 39, "applied" should be --applies--.
Column 10, line 40, "not" should be --now--.
Column 11, line 36, "200" should be --300--.

Signed and sealed this 6th day of August 1974.

(SEAL)
Attest:

McCOY M. GIBSON, JR.
Attesting Officer

C. MARSHALL DANN
Commissioner of Patents

FORM PO-1050 (10-69)

USCOMM-DC 60376-P69
* U.S. GOVERNMENT PRINTING OFFICE : 1969 O—366-334

UNITED STATES PATENT OFFICE

CERTIFICATE OF CORRECTION

Patent No. 3,800,277 Dated March 26, 1974

Inventor(s) Bobbie J. Patton, James H. Sexton and John W. Harrell

It is certified that error appears in the above-identified patent and that said Letters Patent are hereby corrected as shown below:

Column 5, line 37, "detector 81" should be --detector 82--.
Column 8, line 16, "signsls" should be --signals--;
line 32, "voltage V hd R" should be --V_R--;
line 61, "amplifier 14" should be --amplifier 114--;
same line, "th logic" should be --the logic--.
Column 9, line 39, "applied" should be --applies--.
Column 10, line 40, "not" should be --now--.
Column 11, line 36, "200" should be --300--.

Signed and sealed this 6th day of August 1974.

(SEAL)
Attest:

McCOY M. GIBSON, JR.
Attesting Officer

C. MARSHALL DANN
Commissioner of Patents

FORM PO-1050 (10-69)

USCOMM-DC 60376-P69
* U.S. GOVERNMENT PRINTING OFFICE : 1969 O—366-334